PHILIPS

BASS+

SHB3175

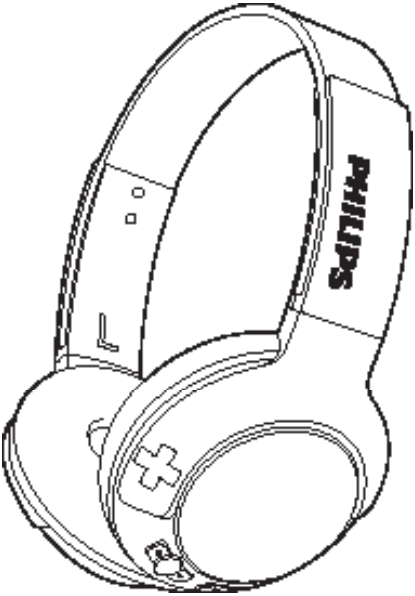

User manual

Register your product and get support at
www.philips.com/support

Contents

1 Important safety instructions 2
Hearing Safety 2
General information 2

2 Your Bluetooth wireless headphones 3
What's in the box 3
Other devices 3
Overview of your Bluetooth wireless headphones 3

3 Get started 5
Charge your headphones 5
Pair the headphones with your mobile phone 5

4 Use your headphones 6
Connect the headphones to a Bluetooth device 6
Manage your calls and music 6
Wear your headphones 7
Compact folding 8

5 Technical data 9

6 Notice 10
Declaration of conformity 10
Disposal of your old product and battery 10
Compliance with EMF 10
Trademarks 11

7 Frequently asked questions 12

1 Important safety instructions

Hearing Safety

Danger

- To avoid hearing damage, limit the time you use headphones at high volume and set the volume to a safe level. The louder the volume, the shorter the safe listening time is.

Be sure to observe the following guidelines when using your headset.

- Listen at reasonable volumes for reasonable periods of time.
- Be careful not to adjust the volume continuously upwards as your hearing adapts.
- Do not turn up the volume so high that you can't hear what's around you.
- You should use caution or temporarily discontinue use in potentially hazardous situations.
- Excessive sound pressure from earphones and headphones can cause hearing loss.
- Using headphones with both ears covered while driving is not recommended and may be illegal in some areas while driving.
- For your safety, avoid distractions from music or phone calls while in traffic or other potentially dangerous environments.

General information

To avoid damage or malfunction:

Caution

- Do not expose headphones to excessive heat.
- Do not drop your headphones.
- Headphones shall not be exposed to dripping or splashing.
- Do not allow your headphones to be submerged in water.
- Do not use any cleaning agents containing alcohol, ammonia, benzene, or abrasives.
- If cleaning is required use a soft cloth, if necessary dampened with a minimum amount of water or diluted mild soap, to clean the product.
- The integrated battery shall not be exposed to excessive heat such as sunshine, fire or the like.
- Danger of explosion if battery is incorrectly replaced. Replace only with the same or equivalent type.

About operating and storage temperatures and humidity

- Operate or store in a place where temperature is between -15ºC (5ºF) and 55ºC (131ºF) (up to 90% relative humidity.
- Battery life may be shorter in high or low temperature conditions.

2 Your Bluetooth wireless headphones

Congratulations on your purchase, and welcome to Philips! To fully benefit from the support that Philips offers, register your product at **www.philips.com/welcome**.
With this Philips wireless headphones, you can:

- enjoy convenient wireless handsfree calls;
- enjoy and control wireless music;
- switch between calls and music.

What's in the box

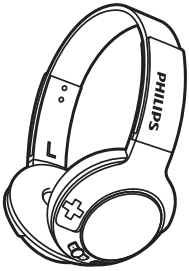

Philips Bluetooth wireless headphones **BASS+ Over-Ear** (SHB3175)

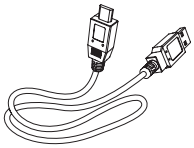

USB charging cable (for charging only)

Audio cable

Quick start guide

Other devices

A mobile phone or device (e.g. notebook, PDA, Bluetooth adapters, MP3 players etc) which supports Bluetooth and is compatible to the headphones (see 'Technical data" on page 9).

Overview of your Bluetooth wireless headphones

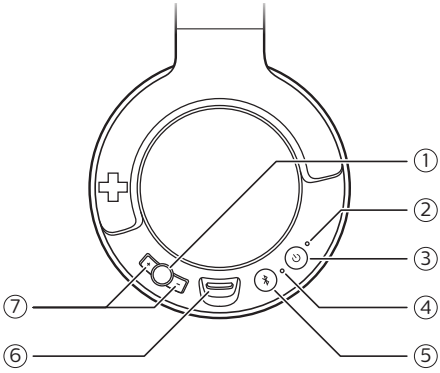

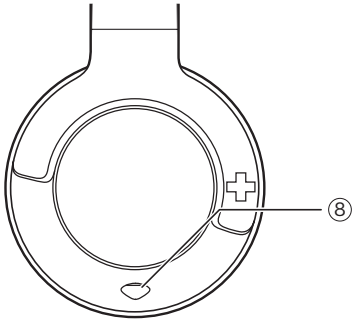

1 ◯
Music/call/track control button

2 LED indicator

3 ⏻
On/off button

4 Microphone

5 ✱
Pairing/Mute button

6 Micro USB charging slot

7 +/-
Volume control button

8 Audio jack

3 Get started

Charge your headphones

Note

- Before you use your headphones for the first time, charge the battery for 5 hours for optimum battery capacity and lifetime.
- Use only the original USB charging cable to avoid any damage.
- Finish your call before charging the headphones, as connecting the headphones for charging will power the headphones off.
- You can operate the headphones normally during charging.

Connect the supplied USB charging cable to:

- the micro USB charging slot on the headphones and;
- the charger/USB port of a computer.

↳ LED turns white during charging and turns off when the headphones is fully charged.

Tip

- Normally, a full charge takes 3 hours.

Pair the headphones with your mobile phone

Before you use the headphones with your mobile phone for the first time, pair it with a mobile phone. A successful pairing establishes a unique encrypted link between the headphones and mobile phone. The headphones store the last 8 devices in the memory. If you try to pair more than 8 devices, the earliest paired device is replaced by the new one.

1. Make sure that the headphones are fully charged.
2. Press and hold ⏻ for 2 seconds to turn the headphones on.
3. Press and hold ✱ until the blue and white LED flashes alternately.
   ↳ The headphones remain in pairing mode for 5 minutes.
4. Make sure that the mobile phone is turned on and its Bluetooth feature is activated.
5. Pair the headphones with the mobile phone. For detailed information, refer to the user manual of your mobile phone.

The following example shows you how to pair the headphones with your mobile phone.

1. Activate the Bluetooth feature of your mobile phone, select **BASS+ Over-Ear**.
2. Enter the headset password "**0000**" (4 zeros) if prompted. For those mobile phones featuring Bluetooth 3.0 or higher, no need to enter a password.

4 Use your headphones

Connect the headphones to a Bluetooth device

1 Turn on your mobile phone/Bluetooth device.

2 Press and hold ⏻ for 2 seconds to turn the headphones on.
   ↳ The blue LED flashes.
   ↳ The headphones are reconnected to the last connected mobile phone/Bluetooth device automatically. If the last one is not available, the headphones try to reconnect to the second last connected device.

Tip

- If you turn on the mobile phone/Bluetooth device or activate the Bluetooth feature after turning on the headphones, you have to reconnect the headphones and mobile phone/Bluetooth device manually.

Note

- If the headphones fail to connect to any Bluetooth device within range in 5 minutes, it will switch off automatically to save the battery life.

Manage your calls and music

On/off

Task	Button	Operation
Turn the headphones on.	⏻	Press and hold for 2 seconds.
Turn the headphones off.	⏻	Press and hold for 6 seconds. ↳ The white LED is on and fades out.

Music control

Task	Button	Operation
Play or pause music.	◯	Press once.
Adjust volume.	+/-	Press once/press and hold.
Skip forward.	◯	Press twice.
Skip backward.	◯	Press and hold for 2 seconds.

Call control

Task	Button	Operation
Pick up/hang up a call.	◯	Press once. ↳ 1 beep.
Reject an incoming call.	◯	Press and hold for 2 seconds. ↳ 1 beep.
Switch caller during a call.	◯	Press and hold for 2 seconds.

Mute/unmute the microphone in a call.	✱	Press once. ↳ 1 beep.

Voice control

Task	Button	Operation
Siri/Google Now.	✱	Press and hold for 2 seconds.

Other headphones indicator status

Headphones status	Indicator
The headphones are connected to a Bluetooth device, while the headphones in standby mode or while you are listening to music.	The blue LED flashes for every 8 seconds.
The headphones are ready for pairing.	The LED flashes blue and white alternately.
The headphones are on but not connected to a Bluetooth device.	The blue LED flashes quickly. If no connection can be made, the headphones will turn itself off within 5 minutes.
Low battery level.	The white LED flashes 3 times for every 150 seconds until it is out of power.
Battery is fully charged.	The white LED is off.

Wired connection

You can also use the headphones with the audio cable provided when the battery is too low. Make sure the headphones turned off before using the audio cable. Connect the supplied audio cable to the headphones and external audio device.

Wear your headphones

Adjust the headband to fit your head.

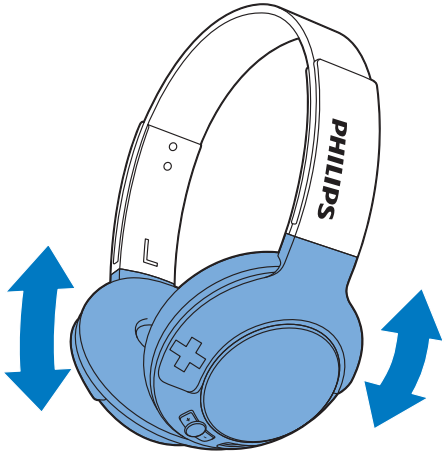

Compact folding

After use, twist the headphones for easy storage.

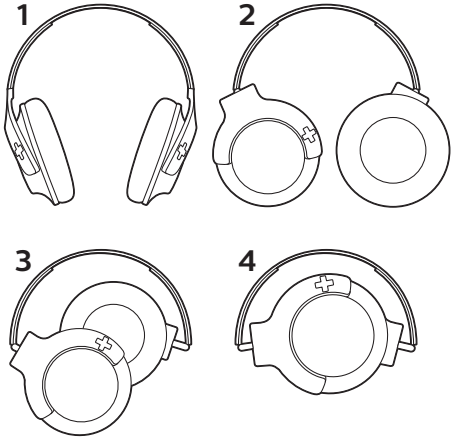

5 Technical data

- Music time: 12 hours
- Talk time: 12 hours
- Standby time: 166 hours
- Normal time for a full charge: 3 hours
- Rechargeable lithium polymer battery (240 mAh)
- 3.5 mm audio jack for corded headphones mode
- Bluetooth 4.1, Bluetooth mono support (Headset Profile - HSP, Hands-Free Profile - HFP), Bluetooth stereo supported (Advanced Audio Distribution Profile - A2DP; Audio Video Remote Control Profile - AVRCP)
- Frequency range: 2.402-2.480GHz
- Transmitter power: <20dBm
- Operating range: Up to 10 meters (33 feet)
- Digital echo & noise reduction
- Auto power off

Note

- Specifications are subject to change without notice.

6 Notice

Declaration of conformity

Hereby, Gibson Innovations declares that this product is in compliance with the essential requirements and other relevant provisions of Directive 2014/53/EU. You can find the Declaration of Conformity on www.p4c.philips.com.

Disposal of your old product and battery

Your product is designed and manufactured with high quality materials and components, which can be recycled and reused.

This symbol on a product means that the product is covered by European Directive 2012/19/EU.

This symbol means that the product contains a built-in rechargeable battery covered by European Directive 2013/56/EU which cannot be disposed of with normal household waste. We strongly advise you to take your product to an official collection point or a Philips service centre to have a professional remove the rechargeable battery. Inform yourself about the local separate collection system for electrical and electronic products and rechargeable batteries. Follow local rules and never dispose of the product and rechargeable batteries with normal household waste. Correct disposal of old products and rechargeable batteries helps prevent negative consequences for the environment and human health.

Remove the integrated battery

Note

- Make sure the headphones are disconnected from the USB charging cable before removing the battery.

If there is no collection/recycling system for electronic products in your country, you can protect the environment by removing and recycling the battery before disposing the headphones.

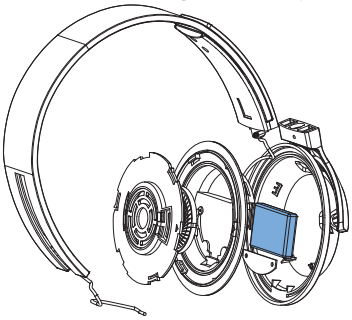

Compliance with EMF

This product complies with all applicable standards and regulations regarding exposure to electromagnetic fields.

Environmental information

All unnecessary packaging has been omitted. We have tried to make the packaging easy to separate into three materials: cardboard (box), polystyrene foam (buffer) and polyethylene (bags, protective foam sheet.)

Your system consists of materials which can be recycled and reused if disassembled by a specialized company. Please observe the local regulations regarding the disposal of packaging materials, exhausted batteries and old equipment.

Trademarks

Bluetooth

The Bluetooth® word mark and logos are registered trademarks owned by Bluetooth SIG, Inc. and any use of such marks by Gibson Innovations Limited is under license.

Siri

Siri is a trademark of Apple Inc., registered in
the U.S. and other countries.

Google

Google and the Google Logo are registered trademarks of Google Inc.

7 Frequently asked questions

My Bluetooth headphones do not switch on.
The battery level is low. Charge the headphones.

I cannot pair my Bluetooth headphones with a mobile phone.
The Bluetooth is disabled. Enable the Bluetooth feature on your mobile phone and turn on the mobile phone before you turn on the headphones.

Pairing does not work.
Make sure the headphones are in pairing mode.

- Follow the steps described in this user manual (see 'Pair the headphones with your mobile phone" on page 5).
- Make sure that the LED light flashes blue and white alternately before you release ✱. Do not stop holding the button if you see the blue LED only.

The mobile phone cannot find the headphones.

- The headphones may be connected to a previously paired device. Turn off the connected device or move it out of range.
- Pairing may have been reset or the headphones have been previously paired with another device. Pair the headphones with the mobile phone again as described in the user manual (see 'Pair the headphones with your mobile phone" on page 5).

My Bluetooth headphones are connected to a Bluetooth stereo enabled mobile phone, but music only plays on the mobile phone speaker.
Refer to the user manual of your mobile phone. Select to listen to music through the headphones.

The audio quality is poor and crackling noise can be heard.
The Bluetooth device is out of range. Reduce the distance between your headphones and Bluetooth device, or remove obstacles between them.

The audio quality is poor when streaming from the mobile phone is very slow, or audio streaming does not work at all.
Make sure your mobile phone not only supports (mono) HSP/HFP but also supports A2DP (see 'Technical data" on page 9).

I hear but cannot control music on my Bluetooth device (e.g. play/pause/skip forward/backward).
Make sure the Bluetooth audio source supports AVRCP (see 'Technical data" on page 9).

My headphones do not work when the audio cable is connected.
Microphone function will be deactivated if a 3.5mm audio cable is connected to the headset. In such case, your headphones are only for music enjoyment.

For further support, visit www.philips.com/support.

2017 © Gibson Innovations Limited. All rights reserved.
This product has been manufactured by, and is sold under the responsibility of Gibson Innovations Ltd., and Gibson Innovations Ltd. is the warrantor in relation to this product.
Philips and the Philips' Shield Emblem are registered trademarks of Koninklijke Philips N.V.

UM_SHB3175_00_EN_V0.1
WK1721

正面

尺寸为：89*141.5mm

English

Notice of compliance

The device complies with the FCC rules, Part 15.Operation is subject to the following two conditions:

1. This device may not cause harmful interference, and
2. This device must accept any interference received, including interference that may cause undesired operation.

FCC rules
This equipment has been tested and found to comply with the limits for a Class B digital device, pursuant to part 15 of the FCC Rules. These limits are designed to provide reasonable protection against harmful interference in a residential installation. This equipment generates, uses and can radiate radio frequency energy and, if not installed and used in accordance with the instruction manual, may cause harmful interference to radio communications.
However, there is no guarantee that interference will not occur in a particular installation. If this equipment does cause harmful interference to radio or television reception, which can be determined by turning the equipment off and on, the user is encouraged to try to correct the interference by one or more of the following measures:

- Relocate the receiving antenna.
- Increase the separation between equipment and receiver.
- Connect the equipment into an outlet on a circuit different from that to which the receiver is connected.
- Consult the dealer or an experienced radio/TV technician for help.

FCC Radiation Exposure Statement:
This equipment complies with FCC radiation exposure limits set forth for an uncontrolled environment.
This transmitter must not be co-located or operating in conjunction with any other antenna or transmitter.

Canada:
This device complies with Industry Canada licence-exempt RSS standard(s). Operation is subject to the following Two conditions: (1) this device may not cause harmful interference, and (2) this device must accept any interference received, including interference that may cause undesired operation.

CAN ICES(B)/NMB-3(B)

IC Radiation Exposure Statement:
This equipment complies with Canada radiation exposure limits set forth for uncontrolled environments.
This transmitter must not be co-located or operating in conjunction with any other antenna or transmitter.

Caution: The user is cautioned that changes or modifications not expressly approved by the party responsible for compliance could void the user's authority to operate the equipment.

BC

反面

French

Avis de conformit é

Cetappareilsatisfait aux r è glements de la FCC partie 15 du Code of Federal Regulations. Son fonctionnementestassujetti aux deux conditions suivantes :

1. Cetappareil ne doit pas causer d′ interf é rencepr é judiciable et
2. I′ appareildoit accepter touteinterf é rencereçue, y compris les interf é rences qui peuvent causer un fonctionnement non d é sir é .

R è glement de la FCC
Cet é quipement a é t é test é et jug é compatible avec les limitess′ appliquant aux appareilsnum é riques de la classe B, conform é ment à l′ article 15 du r è glement de la FCC. Ceslimitesont é t é d é finies pour fournirune protection raisonnablecontre les interf é rencesnuisiblesdans le cadre d′ une installation r é sidentielle.
Cet é quipementg é n è re, utilise et peut é mettre de l′ é nergieradiofr é quence et, s′ iln′ est pas install é niutilis é conform é ment aux instructions, peut causer des interf é rencesg ê nantes pour les communications radio.
Rien ne garantittoutefoisque des interf é rences ne surviendront pas dansune installation particuli è re. Si cet é quipement cause des interf é rencesnuisibles pour la r é ception de la radio ou de la t é l é vision, ce qui peut ê tred é termin é enmettantl′ é quipement hors tension puis sous tension, l′ utilisateurdevra essayer de corrigercesinterf é renceseneffectuantuneouplusieurs des op é rationssuivantes :

D é placezl′ antenne de r é ception.
Augmentez la distance entre l′ é quipementet le r é cepteur.
Branchezl′ é quipement à uneprise d′ un circuit autrequeceluisurlequel le r é cepteurestbranch é .
Consultez le d é taillantouuntechnicien de radiot é l é visionexp é riment é .

Canada :
Le pr é sentappareilestconforme aux CNR d′ Industrie Canada applicables aux appareils radio exempts de licence. L′ exploitationestautoris é e aux deux conditions suivantes : (1) l′ appareil ne doit pas produire de brouillage, et (2) l′ utilisateur de l′ appareildoit accepter tout brouillageradio é lectriquesubi, m ê mesi le brouillageest susceptible d′ encompromettre le fonctionnement.

CAN ICES(B)/NMB-3(B)

D é clarationd′ ICsurl′ exposition aux radiations:
Cet é quipementestconforme aux limitesd′ exposition aux radiations d é finies par le Canada pour des environnements non contrôl é s.
Cet é metteur ne doit pas ê treinstall é au m ê meendroitniutilis é avec uneautreantenneou un autre é metteur.

BC