KURYAKYN

INSTALLATION INSTRUCTIONS

WANDERBAR PORTABLE SOUNDBAR BY MTX®

2721 14” SOUNDBAR OR 2724 10” SOUNDBAR

THANK YOU FOR CHOOSING KURYAKYN!

Protect yourself and others from possible injury and property damage or loss. Pay close attention to all instructions, warnings, cautions, and notices regarding the installation, use, and care of this product.

WARNING THIS INDICATION ALERTS YOU TO THE FACT THAT IGNORING THE CONTENTS DESCRIBED HEREIN CAN RESULT IN POTENTIAL DEATH OR SERIOUS INJURY.

CAUTION THIS INDICATION ALERTS YOU TO THE FACT THAT IGNORING THE CONTENTS DESCRIBED HEREIN CAN RESULT IN MINOR OR MODERATE POTENTIAL INJURY.

NOTICE THIS INDICATION ALERTS YOU TO THE FACT THAT IGNORING THE CONTENTS DESCRIBED HEREIN MAY NEGATIVELY AFFECT PRODUCT PERFORMANCE AND FUNCTIONALITY OR DAMAGE THE PRODUCT ITSELF OR THE PRODUCT TO WHICH IT IS BEING ATTACHED.

ENSURE THAT THE FOLLOWING PARTS HAVE BEEN INCLUDED IN THE KIT:

1	Sound Bar	1	USB Charging Cable	1	USB-C Wall Charger

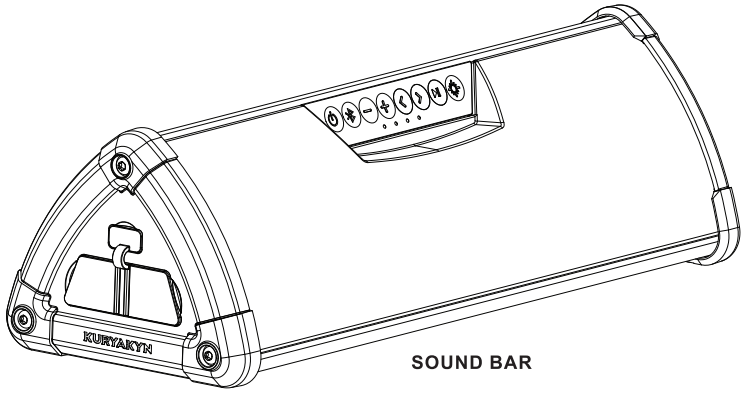

SOUND BAR

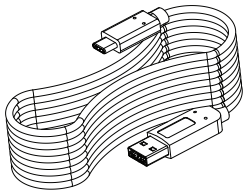

USB CHARGING CABLE

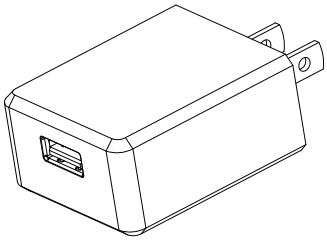

USB-C WALL CHARGER

CHANGES OR MODIFICATIONS TO THIS UNIT NOT EXPRESSLY APPROVED BY THE PARTY RESPONSIBLE FOR COMPLIANCE COULD VOID THE USER’S AUTHORITY TO OPERATE THE EQUIPMENT.

NOTICE THESE INSTALLATION INSTRUCTIONS CONTAIN IMPORTANT INFORMATION. ENSURE THE END USER RECEIVES THIS COPY AND IS AWARE OF ITS IMPORTANCE FOR FUTURE USE.

INTRODUCTION

Thank you for purchasing the Kuryakyn WanderBar Portable Soundbar by MTX, designed to work with most Bluetooth enabled devices including iPhone® and Android® smartphones and tablets. The WanderBar provides incredible sound in a rugged package to match your active lifestyle. Quick detach mount kits are available separately for motorcycles, UTVs and other vehicles, but the Sound Bar is also perfect for camping, boating, tailgating and home use. Congratulations and enjoy the ultimate audio experience!

302721
DPF-MRK-003 REV A 12/4/20

KURYAKYN.COM
866 277 9598 | INFO@KURYAKYN.COM
454 COUNTY ROAD VV SOMERSET, WI 54025

KURYAKYN

INSTALLATION INSTRUCTIONS

WANDERBAR PORTABLE SOUNDBAR BY MTX®

-CONTINUED-

FEATURES

- WanderBar Motorcycle and UTV Mounting Kits sold separately (see Kuryakyn.com)
- Amplifier 2 x 27W RMS, 2 x 35W Dynamic
- Integrated DSP (Digital Signal Processor) for peak performance at all volumes and all environments
- Each channel has dual 1” teteron dome tweeters and one high sensitivity neodymium 2” x 3.2” woofer (six total speakers)
- WanderBar 10” features one (1) passive radiator; WanderBar 14” features dual (2) passive radiators (radiators are 2.25” x 3.6”)
- Passive radiator provides distortion-free mids and lows, and maintains a waterproof seal unlike ported speaker designs
- Chargeable lithium battery provides up to 6 hours of playback at 50% volume (battery can be charged with included USB wall charger or via vehicle mount kit, sold separately)
- Internal Bluetooth receiver allows wireless connectivity to any Bluetooth-enabled device
- Integrated 100-lumen task light, plus backlit buttons and battery indicator light for high-vis accessibility in day or night use
- Integrated USB charging port for phones/devices
- All-weather construction for use on any vehicle, weather-resistant in accordance with IP65 rating
- Over-molded endcaps protect surfaces when used off vehicle
- 14” long x 5” wide x 4” tall (5.2 lbs), 10” long x 5” wide x 4” tall (4.3 lbs)

CONTROL PANEL

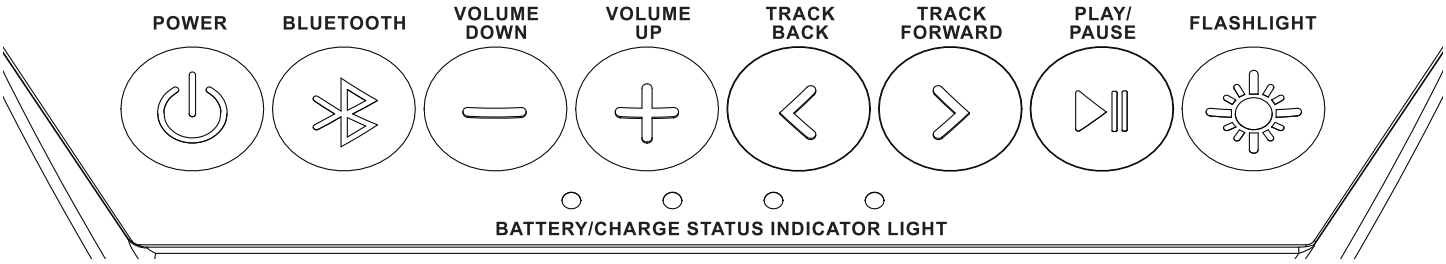

ELECTRONIC OPERATION

POWER

- To power on the unit, press and release the power button. The unit should illuminate its Power button LED and announce, “Power On”.
- To power off the device, hold the power button for 3-5 seconds. The unit will announce “Power Off”, then shut down.

BLUETOOTH

The speaker automatically goes into pairing mode when powered on (Bluetooth button LED is flashing).

IF PAIRING A NEW DEVICE FOR THE FIRST TIME:

- Enter pairing mode by either turning on the speaker or pressing the Bluetooth button for 3 seconds. You will know you are in pairing mode when the Bluetooth button LED is flashing.
- Select 2724 or 2721 from the menu on your Bluetooth enabled device. Once the unit is successfully paired to the device, the Bluetooth button LED will be on constant.
- Once paired the unit will be able to play audio from your Bluetooth device.

IF DEVICE HAS BEEN PAIRED WITH SPEAKER BEFORE:

The system automatically goes into pairing mode when powered on. If the speaker pairs with a device (Bluetooth LED constantly lit), double check your device you want it paired with to confirm the speaker has synced with that device.

302721
DPF-MRK-003 REV A 12/4/20

KURYAKYN.COM
866 277 9598 | INFO@KURYAKYN.COM
454 COUNTY ROAD VV SOMERSET, WI 54025

-CONTINUED-

ELECTRONIC OPERATION CONTINUED

VOLUME DOWN Pressing the volume down button will decrease the volume level until minimum volume is reached. At Minimum volume, two beep tones will be heard.

VOLUME UP Pressing the volume up button will increase the volume until max volume is reached. At max volume, two beep tones will be heard.

TRACK BACK & FORWARD To skip between tracks, use the track forward and track back buttons.

PLAY/PAUSE Pressing the Play/Pause button while connected to a streaming device will either start the track playing, if not playing; or pause the currently playing track.

FLASHLIGHT

- Press and release the flashlight button to turn on the flashlight.
- When active, the flashlight button will be illuminated.
- To turn off the flashlight, press and release the flashlight button.

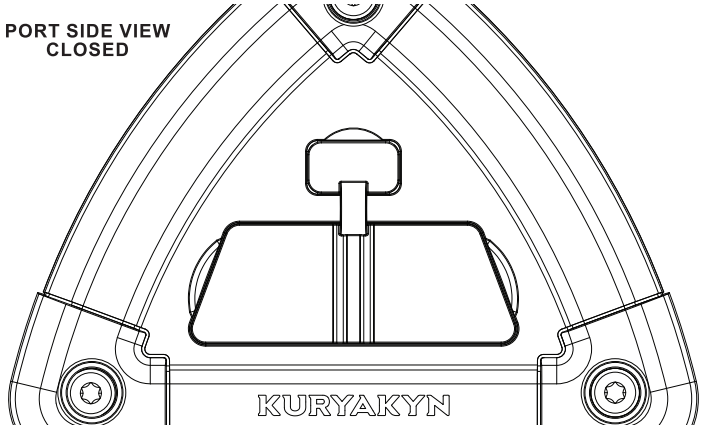

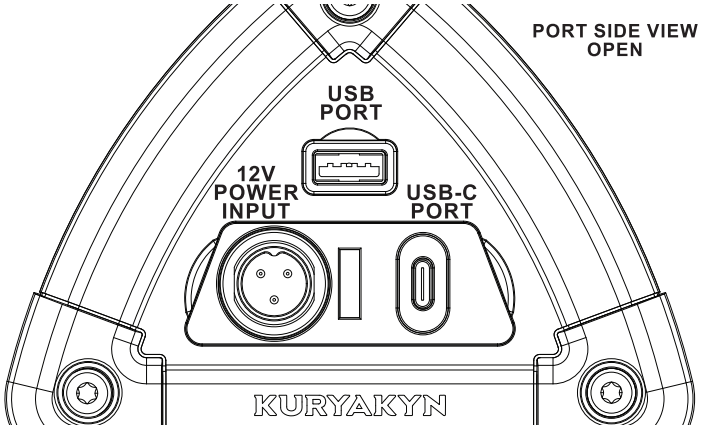

USB PORT

To conveniently charge your phone or other devices, plug USB cord into USB port location on the side of the sound bar. This is a charging port only, it is NOT an audio input.

USB-C PORT

The sound bar is charged through the USB-C port on the side of the unit.

A) If the unit is in the “Off” state when a charging source is connected, the unit will remain “Off” but give an initial indication of charging for one minute, then turn off all charging indication while continuing to charge in the background.

B) If the unit is in the “On” state when a charging source is connected, the unit will remain “On” and indicate the charging status by blinking the LED state that the charge level is in. Once that charge state is met, that LED will go on solid, and the next state will indicate it is charging until all four LEDs are on solid.

12V POWER INPUT

To ensure uninterrupted performance on long road trips or days on the trail, the WanderBar is equipped with a sealed 12V power input for connection to motorcycles, UTVs or any vehicles with 12V electrical systems. The power cable is included with the quick detach vehicle mount kits, sold separately.

KURYAKYN.COM
866 277 9598 | INFO@KURYAKYN.COM
454 COUNTY ROAD VV SOMERSET, WI 54025

-CONTINUED-

AUTO SHUTDOWN

The unit will automatically shut down in the following instances:

- **REGISTRATION TIME OUT**: If a device does not register and connect within 10 minutes, the unit will go into its Power “OFF” sequence.
- **LOW BATTERY**: If the battery level is depleted to the 5% level of remaining capacity, the unit will announce “Battery Low” then go into its Power “OFF” Sequence. If the unit is turned on while in the Low Battery condition, the unit will immediately repeat the Low Battery announcement and go into its Power “OFF” Sequence. When turning off in the Low Battery condition, the unit will also turn off its Flashlight if illuminated.
- **LOSS OF CONNECTION**: Upon loss of connection or audio stream for 10 minutes, the unit will go into its Power “OFF” Sequence.
- **BATTERY TEMPERATURE FAULT**: If the battery temperature reaches an unsafe level, the unit will announce “Battery Fault” and go into its Power “OFF” Sequence.

FOUR TIPS TO GET THE MOST FROM YOUR NEW AUDIO SYSTEM

1. Always use a high-quality music source. Non-compressed, native files provide the best sound quality when downloaded to your phone or device.
2. When using streaming services (Apple Music, Spotify, Pandora, etc), review app settings to ensure “high-quality” options are selected. Low quality settings and poor signal can significantly reduce the quality of your audio. Note that certain streaming services may require a premium subscription for high quality streaming or download access.
3. Check the settings on your phone or device to ensure high quality settings are selected and make sure phone EQ options are turned off for best results.
4. Video apps like You Tube and Vimeo may not provide a quality audio experience.

KURYAKYN.COM
866 277 9598 | INFO@KURYAKYN.COM
454 COUNTY ROAD VV SOMERSET, WI 54025

This equipment has been tested and found to comply with the limits for a Class B digital device, pursuant to Part 15 of the FCC rules. These limits are designed to provide reasonable protection against harmful interference in a residential installation. This equipment generates uses and can radiate radio frequency energy and, if not installed and used in accordance with the instructions, may cause harmful interference to radio communications. However, this is no guarantee that interference will not occur in a particular installation. If this equipment does cause harmful interference to radio or television reception, which can be determined by turning the equipment off and on, you are encouraged to try to correct the interference by one or more of the following measures:

• Reorient or relocate the receiving antenna.
• Increase the separation between the equipment and receiver.
• Connect the equipment to an outlet on a different circuit than the one to which the receiver is connected.
• Consult the dealer or an experienced radio/TV technician for help.
• Changes or modifications not expressly approved by the party responsible for compliance could void the user's authority to operate the equipment.

This device complies with part 15 of the FCC Rules. Operation is subject to the following two conditions: (1) This device may not cause harmful interference and (2) this device must accept any interference received, including interference that may cause undesired operation.

This device contains licence-exempt transmitter(s)/receiver(s) that comply with Innovation, Science and Economic Development Canada's licence-exempt RSS(s). Operation is subject to the following two conditions: (1) This device may not cause interference; and (2) This device must accept any interference, including interference that may cause undesired operation of the device.

FCC/ IC Radiation Exposure Statement This equipment complies with FCC and IC radiation exposure limits set forth for an uncontrolled environment. This equipment should be installed and operated with minimum distance 20cm between the radiator & your body

Cet appareil contient des émetteurs / récepteurs exemptés de licence conformes aux RSS (RSS) d'Innovation, Sciences et Développement économique Canada. L'exploitation est autorisée aux deux conditions suivantes : (1) l'appareil ne doit pas produire de brouillage, et (2) l'utilisateur de l'appareil doit accepter tout brouillage radio électrique subi, même si le brouillage est susceptible d'en compromettre le fonctionnement."

FCC/ IC Déclaration d 'exposition aux rayonnements Cet appareil est conforme à FCC et IC l'exposition aux rayonnements limites fixées pour un environnement non contrôlé. Cet appareil doit être installé et utilisé avec une distance minimale de 20 cm entre le radiateur et votre corps. Cet transmetteur ne doit pas être co-situé ou opérant en liaison avec toute autre antenne ou transmetteur.

LIMITED WARRANTY

Kuryakyn warrants that any Kuryakyn products sold hereunder, shall be free of defects in materials & workmanship for a period of one (1) year from the date of purchase by the consumer excepting the following provisions:

1. Kuryakyn shall have no obligation in the event the customer is unable to provide a receipt showing the date the customer purchased the product(s).
2. The product must be properly installed, maintained & operated under normal conditions.
3. Kuryakyn shall not be liable for any consequential & incidental damages, including labor & paint, resulting from failure of a Kuryakyn product, failure to deliver, delay in delivery, delivery in nonconforming condition, or for any breach of contract or duty between Kuryakyn & a customer.
4. Kuryakyn products are often intended for use in specific applications. Kuryakyn makes no warranty if a Kuryakyn product is used in applications other than intended.
5. Kuryakyn electrical products are warranted for one (1) year from the date of purchase by the consumer. L.E.D.'s contained in components of Kuryakyn products will be warranted for defects in materials & workmanship for 3 years from the date of purchase whereas all other components shall be warranted for one (1) year.
6. All warranty claims must be directed to the place of purchase. Merchandise sold through internet auction sites or any other unauthorized reseller shall not carry a Kuryakyn warranty. If unsure, please contact the place of purchase to verify they are an authorized Kuryakyn reseller.

RETURN POLICY

Merchandise determined to be defective may be returned up to one year from the date of purchase. Returns must be processed through original seller. Returned merchandise for any other reason other than warranty claims must be in like new condition & subject to a 20% restocking fee. All returns are subject to inspection for determination of full or partial credit. Any returned part that shows evidence of being used or installed contrary to manufacturer's instructions, &/or subjected to improper handling, packaging or return shipping by the customer, will not be eligible for exchange, refund or warranty consideration. All returned electrical items will be inspected & tested. If electrical item is deemed functional, no credit will be issued & item will be returned. All sales are final on discontinued or closeout merchandise.

©2015 KURYAKYN HOLDINGS, LLC ALL RIGHTS RESERVED

KURYAKYN, KURYAKYN K logo and the marks appearing on this instruction sheet are registered and common law trademarks of Kuryakyn Holdings except noted third-party trademarks. A full listing of trademarks and trademark registrations owned by Kuryakyn Holdings can be found at www.kuryakyn.com/legal-notice.

Emissions Notice: The California Air Resources Board (CARB) does not permit the use of aftermarket emission-related parts(s) that alter the performance of OEM emission-related devices unless CARB has issued an Executive Order, other than on racing vehicles on closed courses. Check your local laws and manufacturer's information.

Listed Manufacturers and product model names are for reference only. All product and company names are trademarks or registered trademarks of their respective holders. Use of them does not imply any affiliation with or endorsement by them. All specifications are subject to change without notice.

For additional information on third-party product and company names, please consult our Web page at www.kuryakyn.com/legal-notice

KURYAKYN.COM

866 277 9598 | INFO@KURYAKYN.COM

454 COUNTY ROAD VV SOMERSET, WI 54025