Quick Start 10.1” Windows Pro Tablet

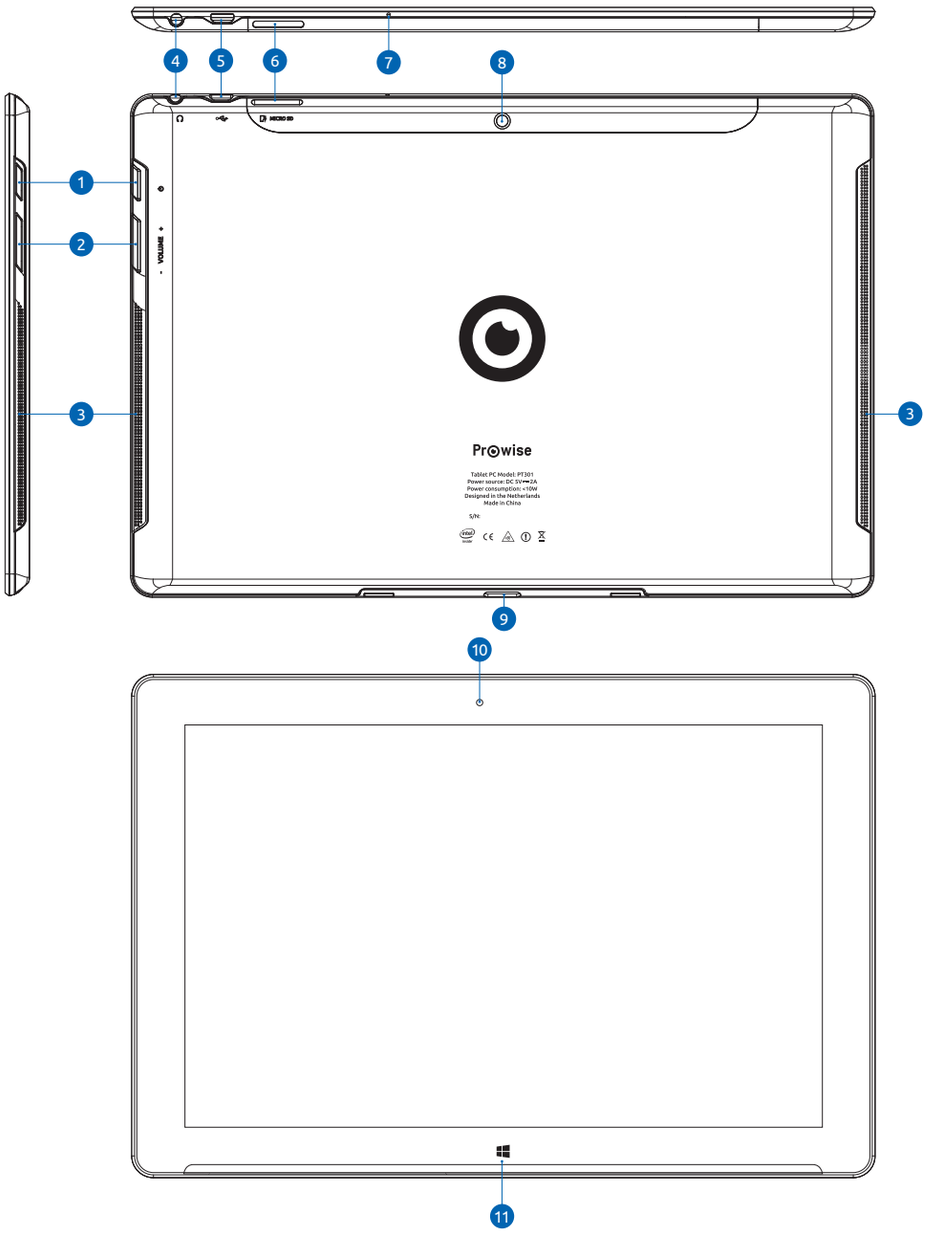

1 **On/Off button**
Aan/uit knop
Ein/Aus-Taste

2 **Volume +/- button**
Volume +/- knop
Lautstärke +/- Taste

3 **Speakers**
Luidsprekers
Lautsprecher

4 **Headphone**
Hoofdtelefoon
Headsetbuchse

5 **Micro USB port/ Power Connection**
Micro USB poort/ Stroomaansluiting
Micro USB Einschub/ Stromanschluss

6 **Micro SD port**
Micro SD poort
Micro SD Einschub

7 **Microphone**
Microfoon
Mikrofon

8 **Back Camera**
Camera achterzijde
Hintere Kamera

9 **Dock Connector**
Dock aansluiting
Dock Anschluss

10 **Front Camera**
Camera voorzijde
Vordere Kamera

11 **Home Touch Button**
Home Touch Button
Home Taste

For more information please visit www.prowise.com
Voor meer informatie gaat u naar www.prowise.com
Für mehr Informationen besuchen Sie bitte www.prowise.com

Windows Pro Tablet Keyboard Dock

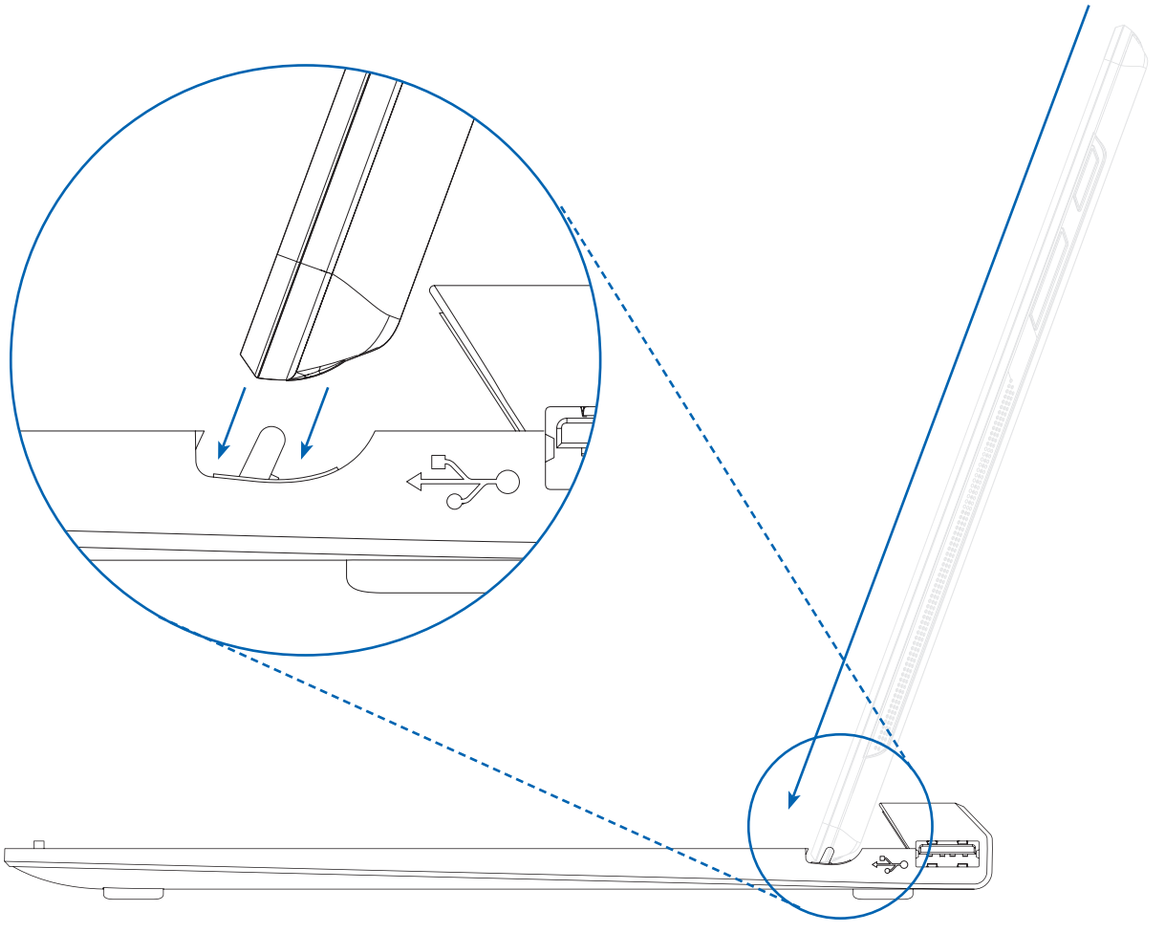

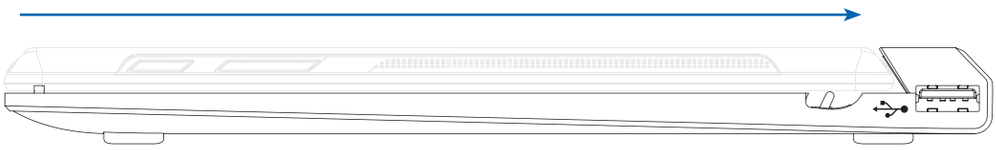

For more information please visit www.prowise.com
Voor meer informatie gaat u naar www.prowise.com
Für mehr Informationen besuchen Sie bitte www.prowise.com

1. About these Instructions

Before using the device for the first time, please read these operating instructions carefully, paying special attention to the safety notices.
This device should only be used as designated and as described in these instructions.
Please keep these instructions in a safe place for future reference. always include these instructions if passing the device on.

2. Symbols and key words used in these instructions

CAUTION!
Please follow the guidelines to avoid injuries and/or property damage

WARNING!
Warning: danger due to excessive volume!

WARNING!
The use of headphones/earphones with a high volume can lead to lasting damage to your hearing. Set the volume to the lowest level before reproducing any sound. Start the sound reproductin and increase the volume to the level that is comfortable for you. Changing the basic settings of the equaliser can also cause damage to the hearing of the listener.

It can cause damage to the hearing ability of the listener if a device is operated through earphones with an increased volume for a long period.

The USB type of the keyboard is to work with USB mouse at the same time.

3. notes on lithium-ion batteries

This device contains a lithium-ion battery. Please note the following when using lithium-ion battery:

- Charge the battery regularly and as fully as possible. Do not leave the battery discharged for long periods.
- Keep the battery away from heat sources such as radiators or open flames, e.g. candles. There is a risk of explosion!
- If the device can not be switched on although it is connected to a power source, please contact your service centre.
- do not use chargers or batteries that are in damage any way.
- Do not dismantle or deform the batteries. you could injure your hands or fingers, and the battery fluid could come into contact with your eyes or skin. If this happens, rinse the affected areas immediately with plenty of clear water and contact your doctor immediately.

This marking indicates that this product should not be disposed with other household wastes throughout te EU. To prevent possible harm to the enviroment or human health from uncontrolled waste disposal, recycle it responsibly to promote the substainable reuse of material recourses. To return your used device, please use the return and collection system or contact the retailer where the product was purchased. They can take this product for environmental safe recycling.

HEREBY PROWISE DECLARES THAT THIS TABLET IS IN COMPLIANCE WITH THE ESSENTIAL REQUIREMENTS AND OTHER RELEVANTPROVISIONS OF DIRECTIVE 2006/95/EC,2004/108/EC AND1999/5/EC.

Power Supply: 5V/2A
Power consumption: max.10W
3.7V @ 7700mAh rechargeable lithium-ion polymer

CAUTION
RISK OF EXPLOSION IF BATTERY IS REPLACED
BY AN INCORRECT TYPE.
DISPOSE OF USED BATTERIES ACCORDING
TO THE INSTRUCTIONS

FCC Compliance Statement

This equipment has been tested and found to comply with the limits for a Class B digital device, pursuant to Part 15 of FCC Rules. These limits are designed to provide reasonable protection against harmful interference in a residential installation. This equipment generates, uses, and can radiate radio frequency energy and, if not installed and used in accordance with the instructions, may cause harmful interference to radio communications. However, there is no guarantee that interference will not occur in a particular installation. If this equipment does cause harmful interference to radio or television reception, which can be determined by turning the equipment off and on, the user is encouraged to try to correct the interference by one or more of the following measures:

- Reorient or relocate the receiving antenna.
- Increase the separation between the equipment and receiver.
- Connect the equipment into an outlet on a circuit different from that to which the receiver is connected.
- Consult the dealer or an experienced technician for help.

This device complies with Part 15 of the FCC Rules. Operation is subject to the following two conditions: (1) this device may not cause harmful interference, and (2) this device must accept any interference received including interference thatmay cause undesired operation.

Changes or modifications not expressly approved by the party responsible for compliance could void the user's authority to operate the equipment

NOTE:THE MANUFACTURER IS NOT RESPONSIBLE FOR ANY RADIO OR TV INTERFERENCE CAUSED BY UNAUTHORIZED MODIFICATIONS TO THIS EQUIPMENT. SUCH MODIFICATIONS COULD VOID THE USER’S AUTHORITY TO OPERATE THE EQUIPMENT.

This equipment complies with FCC radiation exposure limits set forth for an uncontrolled environment. End users must follow the specific operating instructions for satisfying RF exposure compliance. This transmitter must not be co-located or operating in conjunction with any other antenna or transmitter. This equipment has been SAR-evaluated for use in hand. SAR measurements are based on a 0mm spacing from the body and that compliance is achieved at that distance.

ICES-003

This Class B digital apparatus complies with Canadian ICES-003; Cet appareil numérique de la classe B est conforme à la norme NMB-003 du Canada.

The device for operation in the band 5150–5250 MHz is only for indoor use to reduce the potential for harmful interference to co-channel mobile satellite systems Users should also be advised that high-power radars are allocated as primary users (i.e. priority users) of the bands 5250-5350 MHz and 5650-5850 MHz and that these radars could cause interference and/or damage to LE-LAN devices.

Le dispositif pour le fonctionnement dans la bande 5150-5250 MHz est réservé à une utilisation en intérieur afin de réduire les risques d'interférences nuisibles à la co-canal avec les systèmes mobiles par satellite Devraient également être informés les utilisateurs que les radars à haute puissance sont désignés comme utilisateurs principaux (c.-à-utilisateurs prioritaires) des bandes 5250-5350 MHz et 5650-5850 MHz et que ces radars pourraient provoquer des interférences et / ou endommager les appareils LE-LAN.

This device complies with Industry Canada licence-exempt RSS standard(s).
Operation is subject to the following two conditions:
(1) this device may not cause interference, and
(2) this device must accept any interference, including interference that may cause undesired operation of the device

Leprésent appareil est conforme aux CNR d'Industrie Canada applicables aux appareils radio exemptsde licence. L'exploitation est autorisée aux deux conditions suivantes :
(1) l'appareil ne doitpas produire de brouillage, et
(2) l'utilisateur de l'appareil doit accepter tout brouillage radioélectrique subi, mêmesi le brouillage est susceptible d'en compromettre le fonctionnement.