Dell™ Color Cloud Multifunction Printer | H625cdw
Dell™ Color Cloud Multifunction Printer | H825cdw
Dell™ Color Smart Multifunction Printer | S2825cdn

User's Guide

Regulatory Model: H625cdw
H825cdw
S2825cdn

Notes, Cautions, and Warnings

NOTE:

- A **NOTE** indicates important information that helps you make better use of the printer.

CAUTION:

- **A CAUTION indicates potential damage to hardware or loss of data if instructions are not followed.**

WARNING:

- **A WARNING indicates a potential for property damage, personal injury, or death.**

Information in this document is subject to change without notice.

© 2015 Dell Inc. All rights reserved.

Reproduction of these materials in any manner whatsoever without the written permission of Dell Inc. is strictly forbidden.

Trademarks used in this text: *Dell* and the *DELL* logo are trademarks of Dell Inc.
Microsoft, *Windows, Windows Server, and Windows Vista* are either trademarks or registered trademarks of Microsoft Corporation in the United States and/or other countries.
Bonjour, iPhone, Macintosh, Mac OS, and *AirPrint* are trademarks of Apple Inc., registered in the U.S. and other countries.
Adobe, *PostScript*, and *Photoshop* are either registered trademarks or trademarks of Adobe Systems Incorporated in the United States and/or other countries.
RSA and *BSAFE* are either registered trademarks or trademarks of EMC Corporation in the United States and/or other countries.

Microsoft product screen shot(s) reprinted with permission from Microsoft Corporation.

Other trademarks and trade names may be used in this document to refer to either the entities claiming the marks and names or their products. Dell Inc. disclaims any proprietary interest in trademarks and trade names other than its own.

About License

XML Paper Specification (XPS): This product may incorporate intellectual property owned by Microsoft Corporation. The terms and conditions upon which Microsoft is licensing such intellectual property may be found at http://go.microsoft.com/fwlink/?LinkId=52369; *DES*: This product includes software developed by Eric Young (eay@mincom.oz.au); *AES*: Copyright (c) 2003, Dr Brian Gladman, Worcester, UK. All rights reserved. This product uses published AES software provided by Dr Brian Gladman under BSD licensing terms; *TIFF (libtiff)*: Copyright (c) 1988-1997 Sam Leffler and Copyright (c) 1991-1997 Silicon Graphics, Inc.; *ICC Profile (Little cms)*: Copyright (c) 1998-2004 Marti Maria.

As for RSA BSAFE

This printer includes RSA® BSAFE® Cryptographic software from EMC Corporation.

ICC Profile Header

Copyright (c) 1994-1996 SunSoft, Inc.

Rights Reserved

Permission is hereby granted, free of charge, to any person obtaining a copy of this software and

associated documentation files (the "Software"), to deal in the Software without restriction, including without limitation the rights to use, copy, modify, merge, publish distribute, sublicense, and/or sell copies of the Software, and to permit persons to whom the Software is furnished to do so, subject to the following conditions:

The above copyright notice and this permission notice shall be included in all copies or substantial portions of the Software.

THE SOFTWARE IS PROVIDED "AS IS", WITHOUT WARRANTY OF ANY KIND, EXPRESS OR IMPLIED, INCLUDING BUT NOT LIMITED TO THE WARRANTIES OF MERCHANTABILITY, FITNESS FOR A PARTICULAR PURPOSE AND NON-INFRINGEMENT. IN NO EVENT SHALL SUNSOFT, INC. OR ITS PARENT COMPANY BE LIABLE FOR ANY CLAIM, DAMAGES OR OTHER LIABILITY, WHETHER IN AN ACTION OF CONTRACT, TORT OR OTHERWISE, ARISING FROM, OUT OF OR IN CONNECTION WITH THE SOFTWARE OR THE USE OR OTHER DEALINGS IN THE SOFTWARE.

Except as contained in this notice, the name of SunSoft, Inc. shall not be used in advertising or otherwise to promote the sale, use or other dealings in this Software without written authorization from SunSoft Inc.

JPEG Library

Independent JPEG Group's free JPEG software

_____

This package contains C software to implement JPEG image encoding, decoding, and transcoding. JPEG is a standardized compression method for full-color and gray-scale images.

The distributed programs provide conversion between JPEG "JFIF" format and image files in PBMPLUS PPM/PGM, GIF, BMP, and Targa file formats. The core compression and decompression library can easily be reused in other programs, such as image viewers. The package is highly portable C code; we have tested it on many machines ranging from PCs to Crays.

We are releasing this software for both noncommercial and commercial use. Companies are welcome to use it as the basis for JPEG-related products. We do not ask a royalty, although we do ask for an acknowledgement in product literature (see the README file in the distribution for details). We hope to make this software industrial-quality --- although, as with anything that's free, we offer no warranty and accept no liability.

For more information, contact jpeg-info@jpegclub.org.

Contents of this directory

_____

jpegsrc.vN.tar.gz contains source code, documentation, and test files for release N in Unix format.

jpegsrN.zip contains source code, documentation, and test files for release N in Windows format.

jpegaltui.vN.tar.gz contains source code for an alternate user interface for cjpeg/djpeg in Unix format.

jpegaltuiN.zip contains source code for an alternate user interface for cjpeg/djpeg in Windows format.

wallace.ps.gz is a PostScript file of Greg Wallace's introductory article about JPEG. This is an update of the article that appeared in the April 1991 Communications of the ACM.

jpeg.documents.gz tells where to obtain the JPEG standard and documents about JPEG-related file formats.

jfif.ps.gz is a PostScript file of the JFIF (JPEG File Interchange Format) format specification.

jfif.txt.gz is a plain text transcription of the JFIF specification; it's missing a figure, so use the

PostScript version if you can.

TIFFTechNote2.txt.gz is a draft of the proposed revisions to TIFF 6.0's JPEG support.

pm.errata.gz is the errata list for the first printing of the textbook "JPEG Still Image Data Compression Standard" by Pennebaker and Mitchell.

jdosaobj.zip contains pre-assembled object files for JMEMDOSA.ASM. If you want to compile the IJG code for MS-DOS, but don't have an assembler, these files may be helpful.

Math Library

Copyright (C) 1993 by Sun Microsystems, Inc. All rights reserved.

Developed at SunPro, a Sun Microsystems, Inc. business.

Permission to use, copy, modify, and distribute this software is freely granted, provided that this notice is preserved.

==========

copysignf.c: * Copyright (C) 1993 by Sun Microsystems, Inc. All rights reserved.

math_private.h: * Copyright (C) 1993 by Sun Microsystems, Inc. All rights reserved.

powf.c: * Copyright (C) 1993 by Sun Microsystems, Inc. All rights reserved.

scalbnf.c: * Copyright (C) 1993 by Sun Microsystems, Inc. All rights reserved.

libtiff

Copyright (C) 1988-1997 Sam Leffler

Copyright (C) 1991-1997 Silicon Graphics, Inc.

Permission to use, copy, modify, distribute, and sell this software and its documentation for any purpose is hereby granted without fee, provided that (i) the above copyright notices and this permission notice appear in all copies of the software and related documentation, and (ii) the names of Sam Leffler and Silicon Graphics may not be used in any advertising or publicity relating to the software without the specific, prior written permission of Sam Leffler and Silicon Graphics.

THE SOFTWARE IS PROVIDED "AS-IS" AND WITHOUT WARRANTY OF ANY KIND, EXPRESS, IMPLIED OR OTHERWISE, INCLUDING WITHOUT LIMITATION, ANY WARRANTY OF MERCHANTABILITY OR FITNESS FOR A PARTICULAR PURPOSE.

IN NO EVENT SHALL SAM LEFFLER OR SILICON GRAPHICS BE LIABLE FOR ANY SPECIAL, INCIDENTAL, INDIRECT OR CONSEQUENTIAL DAMAGES OF ANY KIND, OR ANY DAMAGES WHATSOEVER RESULTING FROM LOSS OF USE, DATA OR PROFITS, WHETHER OR NOT ADVISED OF THE POSSIBILITY OF DAMAGE, AND ON ANY THEORY OF LIABILITY, ARISING OUT OF OR IN CONNECTION WITH THE USE OR PERFORMANCE OF THIS SOFTWARE.

Zlib

zlib.h -- interface of the 'zlib' general purpose compression library version 1.2.8, April 28th, 2013

Copyright (C) 1995-2013 Jean-loup Gailly and Mark Adler

This software is provided 'as-is', without any express or implied warranty. In no event will the authors be held liable for any damages arising from the use of this software.

Permission is granted to anyone to use this software for any purpose, including commercial applications, and to alter it and redistribute it freely, subject to the following restrictions:

1. The origin of this software must not be misrepresented; you must not claim that you wrote the

original software. If you use this software in a product, an acknowledgment in the product documentation would be appreciated but is not required.

2. Altered source versions must be plainly marked as such, and must not be misrepresented as being the original software.

3. This notice may not be removed or altered from any source distribution.

Jean-loup Gailly Mark Adler
jloup@gzip.org madler@alumni.caltech.edu

_____

UNITED STATES GOVERNMENT RESTRICTED RIGHTS

This software and documentation are provided with RESTRICTED RIGHTS. Use, duplication or disclosure by the Government is subject to restrictions as set forth in subparagraph (c)(1)(ii) of the Rights in Technical Data and Computer Software clause at DFARS 252.227-7013 and in applicable FAR provisions: Dell Inc., One Dell Way, Round Rock, Texas, 78682, USA.

October 2015 Rev. A00

Contents

Notes, Cautions, and Warnings **2**

About License 2

1 Before Beginning **20**

About This Guide **21**

Conventions 21

Finding Information **22**

Product Features **23**

Printer Overview **26**

Front and Rear View 26

Front View 26

Rear View 27

Duplex Automatic Document Feeder (DADF) 28

Operator Panel 28

Status of Wi-Fi Button LED 30

Optional Accessory 30

2 Setting Up the Printer **31**

Overview of the Printer Setup **32**

Preparing to Set Up the Printer **33**

Space Requirements 33

Securing the Printer 33

Connecting Your Printer to a Telephone Line **34**

Connecting the Printer to the Wall Jack 34

Connecting the Printer to a Modem 35

Connecting a Telephone or Answering Machine 35

Turning On/Off the Printer **37**

Turning On the Printer 37

Turning Off the Printer 38

Setting Initial Settings on the Operator Panel 38

Connecting Your Printer to a Computer **44**

Overview 44

Connecting to a Wireless Network 45

Connecting With Dell Printer Easy Install (Windows® Only) 45

Connecting With WPS 46

Manually Connecting to a Wireless Network 47
Changing the Wireless Settings 49
Connecting to a Wired (Ethernet) Network 49
Connecting the Ethernet Cable 49
Connecting With Dell Printer Easy Install (Windows® Only) 50
Configuring With Other Methods 50
Connecting to a Computer With USB 51
Connecting the USB Cable 51
Connecting With Dell Printer Easy Install (Windows® Only) 51
Configuring With Other Methods 52
Installing the Software for Windows® Computers 52
Installing the Software and Print Drivers with Dell Printer Easy Install 52
Installing the Software and Print Drivers When the Printer is Connected to the Network or Computer 52
Setting Up for Web Services on Devices (WSD) 57
Installing the Software for Macintosh Computers 58
Installing the Software and Print Drivers 58
Adding a Printer Using USB Connection 58
Adding a Printer Using IP Printing 58
Adding a Printer Using Bonjour 59
Configuring With Optional Accessories 60

Connecting Your Printer to Mobile Devices 61

Overview 61
Wi-Fi Direct 61
Setting Up Wi-Fi Direct 61
Printing via Wi-Fi Direct 63
Disconnecting Wi-Fi Direct Network 63
Resetting the Passphrase 64
Resetting the PIN 64
Dell Document Hub 64
Android 64
iOS 64
Tap To Print/Scan 65
Preparations 65
Adding the Printer to the Mobile Device 65
Printing or Scanning 66
AirPrint 66
Setting Up AirPrint on Your Printer 66
Printing via AirPrint 67
Google Cloud Print 67
Preparing to Use the Printer With Google Cloud Print 67
Selecting the Version of the Google Cloud Print Service 67
Registering the Printer to Your Google Account 68
Sharing the Printer With the Google Cloud Print Service 69

Canceling the Registration to Google Cloud Print 70
Printing via Google Cloud Print 70
Mopria Print Service 71
Setting Up Mopria Print Service on Your Printer 71
Printing via Mopria Print Service 71

Installing Print Drivers on Linux Computers Using Common UNIX Printing System (CUPS) 72
Operation on Red Hat Enterprise Linux 6 Desktop 72
Setup Overview 72
Installing the Print Driver 72
Setting Up the Print Queue 72
Setting Up the Default Queue 73
Specifying the Printing Options 73
Uninstalling the Print Driver 74
Operation on SUSE Linux Enterprise Desktop 11 74
Setup Overview 74
Installing the Print Driver 74
Setting Up the Print Queue 75
Setting Up the Default Queue 75
Specifying the Printing Options 76
Setting the Password for Authority as the Printer Administrator 76
Uninstalling the Print Driver 76
Operation on Ubuntu 12.04 LTS 77
Setup Overview 77
Installing the Print Driver 77

Setting the IP Address 80
Assigning an IP Address 80
When Using the Dell Printer Easy Install (Windows® Only) 80
When Using the Operator Panel 81
Verifying the IP Settings 81
Verifying the Settings Using Operator Panel 82
Verifying the Settings Using System Settings Report 82

3 Using Your Printer 83

Using the Operator Panel 84
About the Home Screen 84
Basic Operations on the Touch Panel 85
Selecting the Item on the Screen 85
Scrolling the Screen or the Listed Items 85
Moving, Adding or Deleting the Tiles 86
To Move the Tiles 86
To Add the Tiles 86
To Delete the Tiles 87

Using the Keyboard Displayed on the Touch Panel 87
To Change the Keyboard Layout 87
Changing the Language 88
Panel Lock 88
Enabling the Panel Lock 88
Changing the Panel Lock Password 88
Disabling the Panel Lock 89
Setting the Power Saver Timer 89
About the Concurrent Jobs Feature 89

Understanding the System Menus 90

Report / List 90
System Settings 90
Panel Settings 90
PCL Fonts List 90
PCL Macros List 90
PS Fonts List 90
PDF Fonts List 90
Job History 90
Error History 91
Print Meter 91
Color Test Page 91
Protocol Monitor 91
Speed Dial 91
Address Book 91
Server Address 91
Fax Activity 91
Fax Pending 91
Stored Documents 91
Printing a Report / List 92
Wi-Fi | WPS 92
Wi-Fi 92
Wi-Fi Direct 92
WPS (Connect via PBC) 92
WPS (Connect via PIN) 92
Paired Device 92
Admin Settings 92
Phone Book 93
PCL 93
PS 95
PDF 96
Network 97
Ethernet 101
Fax Settings 104
System Settings 109

Maintenance 115
Secure Settings 117
USB Settings 120
Default Settings 121
Copy Defaults 121
Fax Defaults 121
Scan Defaults 121
Direct Print Defaults/USB Direct Print Defaults 122
Tray Management 122
Tray Settings 122
Tray Priority 123
Language Settings 123
Panel Language 123
Keyboard Layout 123
Resetting Defaults 123

Understanding the Job Menus 125

Print 125
Secure Print 125
Private Mailbox 125
Public Mailbox 125
Proof Print 126
Secure Fax Receive 126
Tile Settings 126
Copy 126
Quantity 126
Darken/Lighten 126
Output Color 127
Select Tray 127
2 Sided Copying 127
Sharpness 127
Reduce/Enlarge 127
Original Size 127
Original Type 128
Collation 128
2-Up 128
Color Saturation 128
Margin 128
Auto Exposure 128
Save Settings 128
ID Copy 128
Save Settings 129
Scan to Email 129
Scan to Network Folder 129
Scan to USB 129

Scan to Computer 130
Tile Settings 130
Scan Settings 130
Save Settings 132
Fax 132
Fax Settings 132
Save Settings 133
Print PDF/TIFF 133
Print JPEG 133
Print Settings 134
Dell Document Hub 135
Search for Files 135
Browse for Files 135
Scan 136
Smart OCR Scan 136
E-mail Me 137
Business Card Reader 138
Add App 138

Dell™ Printer Configuration Web Tool 139

Preparing to Use the Dell Printer Configuration Web Tool 139
Setting Up Internet Explorer® 139
Confirming the Menu on the Operator Panel 139
Starting the Dell Printer Configuration Web Tool 140
Page Display Format 140
Top Frame 140
Left Frame 141
Right Frame 142
Changing the Settings of the Menu Items 142
Details of the Menu Items 143
Printer Status 145
Printer Jobs 146
Printer Settings 146
Print Server Settings 159
Copy Printer Settings 179
Print Volume 179
Address Book 181
Tray Management 185

Print Media Guidelines 187

Supported Print Media 187
Multipurpose Feeder (MPF) 187
Tray1 188
Optional 550-Sheet Feeder 189
Supported Paper Weight 190

Unacceptable Print Media 190
Recommended Print Media 190
Recommended Pre-Printed Media and Letterheads 191
Recommended Pre-Punched Print Media 191
Recommended Envelopes 191
Recommended Labels 192
Print Media Storage Guidelines 192

Loading Print Media 193
Before Loading 193
Loading Print Media in Tray1 and the Optional 550-Sheet Feeder 193
Loading Envelopes in the Tray1 197
Loading Print Media in the Multipurpose Feeder (MPF) 198
Loading Envelopes in the MPF 200
Loading Labels in the MPF 201
Loading Letterhead, Pre-Printed, and Pre-Punched Paper 202
Linking Trays 202

Loading Documents 204
Before Loading Documents in the DADF 204
Loading a Document in the Duplex Automatic Document Feeder (DADF) 204
Loading a Document on the Document Glass 205

4 Printing, Copying, Scanning, Faxing, and Dell Document Hub 207

Printing 208
Sending a Job to Print 208
Canceling a Print Job 208
Canceling a Job From the Operator Panel 208
Canceling a Job From a Computer 209
Duplex Printing 209
Using Duplex Print 209
Using Booklet Print 210
Using Stored Print 211
Overview 211
Procedures for Printing Stored Print 213
Printing From USB Flash Drive 214
Supported USB Flash Drive 214
Supported File Formats 215
Printing a PDF/TIFF or JPEG File in a USB Flash Drive 215
Printer Settings 216

Copying 217
Making Copies From the Document Glass 217

Making Copies From the DADF 217
Using the ID Copy 218
Changing the Default Copy Settings 218

Scanning 220

Scanning Overview 220
Tips for Easy Network Scanning 221
Scanning to a Computer With a USB Connection 221
Scanning to a Computer With a Network Connection 221
Printer Setup for Scan to Web Services on Devices (WSD) 221
Scanning and Sending Images to the Computer 222
Scanning From a Computer Using Web Services on Devices (WSD) 223
Preparations for Scanning From the Computer 224
Scanning From the Computer 224
Scanning Using the TWAIN Driver 224
Scanning Using the Windows® Image Acquisition (WIA) Driver 225
Scanning an Image From the Drawing Software 226
Scanning Using Wi-Fi Direct 226
Scanning via Wi-Fi Direct 227
Scanning to a Computer or Server With SMB/FTP 227
Overview 227
Overview for Scanning to an FTP Server 228
Overview for Scanning to a Shared Folder Using SMB 228
Setting a User Account (SMB Only) 228
Creating a Shared Folder (SMB Only) 229
Setting SMB/FTP Destination Into the Address Book 231
Sending the Scanned Data on the Network 236
Scanning to a USB Flash Drive 237
Procedures 237
Specifying a Folder to Save the Scanned Data 237
Sending a Scanned Data via E-Mail 238
Gathering the Necessary Information About Your E-mail Account 238
Setting the DNS Server Address 238
Setting the Information Necessary to Access the Mail Server 239
Registering a Destination E-Mail Address to Address Book 240
Sending an E-mail With the Scanned Data 241
Managing the Scanner 242
Port Settings 242
Password Settings 243
Changing the Default Scan Setting 244

Faxing 245

Initial Settings 245
Specifying the Fax Initial Settings Using the Dell Printer Easy Install 245
Specifying the Fax Initial Settings Using the Operator Panel 246

Changing the Fax Settings 246
Sending a Fax 246
Sending a Fax From Memory 246
Sending a Fax Manually 248
Confirming Transmissions 248
Automatic Redialing 248
Sending a Delayed Fax 249
Sending a Fax Directly From a Computer 249
Overview 250
Procedure 250
Automatic Dialing 254
Speed Dialing 254
Group Dialing 255
Printing a Speed Dial List 256
Phone Book 257
Receiving a Fax 257
Loading Paper for Receiving Faxes 257
Receiving a Fax Automatically 258
Receiving a Fax Manually 258
Receiving Faxes Using the Distinctive Ring Pattern Detection (DRPD) 258
Receiving Faxes in the Secure Receiving Mode 259
Receiving Faxes in the Memory 260
Polling Receive 260
Reports Related to Fax 260
Changing the Default Fax Setting 261

Dell™ Document Hub (Windows® Only) 262

Registering the User and Signing In to the Dell Document Hub 262
Registering a New User to the Dell Document Hub 262
Signing In to the Dell Document Hub 263
Icons for the Dell Document Hub Screens 263
When the Favorite List Screen Is Displayed When You Tap the Tile on the Dell Document Hub Screen 264
Returning to the Home Screen 264
Logging Out From the Printer 264
Searching for and Printing Files 264
Browsing and Printing Files 265
Scanning 267
Scanning the Document Using Optical Character Recognition (OCR) 268
Sending the Scanned Data to Yourself via E-Mail 269
Sending a Scanned Data of a Business Card to Yourself via E-Mail 270

5 Know Your Printer 271

Understanding the Software of Your Printer 272

Overview 272
Dell Printer Hub/Dell Print Management Tool 272
Printer Status Window 273
Status Monitor Console/Status Monitor Widget 273
Tool Box 273
Address Book Editor 273
Dell™ Supplies Management System 273
User Setup Disk Creating Tool 273
App Manager 274
Using the Status Monitor Widget for Macintosh 275
Status Monitor Widget 275
Before Installing the Status Monitor Widget 275
Installing the Status Monitor Widget 276
Opening and Closing the Status Monitor Widget 276
Printer Status Window 276
Order Window 278
Preferences 279
Using the Status Monitor Console for Linux 279
Status Monitor Console 279
Before Installing the Status Monitor Console 280
Installing the Status Monitor Console 280
Starting the Status Monitor Console 280
Printer Selection Window 280
Printer Status Window 281
Dell Supplies Management System Window 282
Service Tag Window 284
Settings Window 284
Software Update 285

User Authentication 286

Creating and Editing the User Accounts 286
Creating a New User Account 286
Editing the User Account 287
Deleting the User Account 287
Logging In to the User Account 287
Logging In Using the Touch Panel 288
Logging In Using the NFC Authentication Card 288
Logging In Using the Local Authentication or Remote Authentication 288
Logging Out 289

Multiple Desktop - Tile Customization 290

Adding a New Tile 290
Selecting From the Pre-defined Tiles 290
Creating a New Tile Including the Job Settings 290

Using the Address Book and Phone Book **292**
Types of Address Books 292
Adding and Editing Entries to the Address Books 292
Using Operator Panel of the Printer 293
Using Address Book Editor 293
Address Book Panel 293
Editing an Entry 293
Using Dell Printer Configuration Web Tool 294
Using the Server Address Book and Server Phone Book 294
Preparing the Printer to Access the External LDAP Server 294
Starting the Dell Printer Configuration Web Tool 294
Setting Authentication Type 294
Setting LDAP Server 295
Setting LDAP User Mapping 296
Sending an E-mail With the Scanned Data Using the E-mail Server Address Book 297
Sending a Fax Using the Fax Server Phone Book 297

Using Digital Certificates **298**
Managing Certificates 298
Preparing to Use HTTPS Communication 298
Creating and Downloading a Certificate Signing Request (CSR) 299
Importing a Digital Certificate 299
Setting a Digital Certificate 300
Confirming the Settings of a Digital Certificate 300
Deleting a Digital Certificate 301
Exporting a Digital Certificate 301
Setting the Features 302
Setting the Certificate in the IPsec Digital Signature Mode 302
Setting the SSL-Use Server Certificate (HTTP/IPP) 303
Setting SMTP-SSL/TLS Communication 303
Setting LDAP-SSL/TLS Communication 303
Setting for Wireless LAN WPA-Enterprise (EAP-TLS) 304
Setting for Wireless LAN WPA-Enterprise (PEAPV0-MS-CHAPV2, EAP-TTLS PAP, EAP-TTLS CHAP) 305
Setting Client Certificate for IEEE 802.1x (EAP-TLS) 306

Understanding Printer Messages **307**
Status Codes 307
Error Messages 314

Specifications **317**
Operating System Compatibility 317
Power Supply 317
Dimensions 317
Weight 318

Memory 318
Page Description Language (PDL)/Emulation, Operating System, and Interface 318
Management Information Base (MIB) Compatibility 319
Environment 319
Operation 319
Print Quality Guarantee 319
Storage 319
Altitude 319
Cables 319
Print Specifications 319
Copy Specifications 320
Scanner Specifications 322
Fax Specifications 322
Wireless Connection Specifications 323

6 Maintaining Your Printer 324

Maintaining Your Printer 325

Checking the Status of Supplies 325
E-mail Alert Setting 325
Conserving Supplies 325
Ordering Supplies 325
Using Dell Printer Configuration Web Tool 325
Using the Dell Supplies Management System 326
Storing Print Media 326
Storing Consumables 326
Replacing the Toner Cartridges 327
Removing the Toner Cartridge 327
Installing a Toner Cartridge 328
Replacing the Drum Cartridges 329
Removing the Drum Cartridge 329
Installing a Drum Cartridge 332
Replacing the Waste Toner Box 334
Removing the Waste Toner Box 334
Installing a Waste Toner Box 336
Cleaning Inside the Printer 337
Cleaning the Color Toner Density (CTD) Sensor 337
Cleaning the LED Print Head 338
Cleaning the Scanner 341
Cleaning the DADF Feed Rollers 343
Moving the Printer 343
Removing Options 345
Removing the Optional 550-Sheet Feeder 345

7 Troubleshooting 347

Troubleshooting 348

Clearing Jams 348
- Identifying the Location of Paper Jams 348
- Clearing Paper Jams From the DADF 348
- Clearing Paper Jams From the Multipurpose Feeder (MPF) and Tray1 351
- Clearing Paper Jams From Inside the Rear Cover 353
- Clearing Paper Jams From the Optional 550-Sheet Feeder 357

Basic Printer Problems 358

Display Problems 359

Printing Problems 359

Print Quality Problems 360
- Light Printout 361
- Smearing Toner/Loose Toner 362
- Random Spots/Blurred Images 363
- Blank Printout 363
- Streaks 364
- Black Printout (Partial or Entire Page) 365
- Equally Spaced Colored Dots 365
- Vertical Blanks 366
- Mottle 367
- Ghosting 367
- Light-Induced Fatigue 368
- Fog 369
- Bead-Carry-Out (BCO) 369
- Jagged Characters 370
- Horizontal Bands 370
- Diagonal Lines 371
- Wrinkled/Stained Printout 371
- Damage on the Leading Edge of Printout 372

Jam/Alignment Problems 372
- Incorrect Margins on the Top and Side 373
- Disorganized Color Registration 373
- Skewed Images 373
- Tray1/Optional 550-Sheet Feeder Misfeed Jam 374
- Multipurpose Feeder (MPF) Misfeed Jam 374
- Regi Jam (Exit Sensor On JAM) 375
- Tray1/Optional 550-Sheet Feeder Multi-feed Jam 375
- Multipurpose Feeder (MPF) Multi-feed Jam 376

Noise 376

Copy Problems 376

Fax Problems 377

Scanning Problems 378

Digital Certificate Problems 380
Wireless Problems 381
Problems With Installed Optional 550-sheet feeder 382
Wi-Fi Direct Problems 382
Scanner Driver/Printer Utility Problems 383
Other Problems 383
Contacting Service 383

Appendix 384

Appendix 385

Dell™ Technical Support Policy 385
Online Services 385
Warranty and Return Policy 385
Recycling Information 385
Contacting Dell 385

1

Before Beginning

About This Guide 21

Finding Information 22

Product Features 23

Printer Overview 26

About This Guide

Click the bookmarks to the left for information on the features, optional accessory, and operation of your Dell H625cdw, Dell H825cdw, or Dell S2825cdn. For details about other documentation included with your printer, see "Finding Information."

NOTE:

- In this manual, Dell H625cdw, Dell H825cdw, or Dell S2825cdn is referred to as the "printer."
- In this manual, the procedures for the computer are explained using Microsoft® Windows® 7 unless stated otherwise.
- The images and screenshots used in this manual are those of the Dell H825cdw unless otherwise mentioned.

Conventions

The following describe the meaning of the symbols and fonts used in this manual:

Item	Description
Bold texts	• Names of hardware button on the operator panel. • Menus, commands, windows, or dialog boxes displayed on the computer screen.
Texts in `Courier New` font	• Menus and messages displayed on the touch panel. • Screen name on the touch panel. • Characters entered from the computer. • Directory paths.
< >	• Key on the keyboard of the computer.
→	• Indicates a process flow.
" "	• Cross references in this manual. • Characters entered from the operator panel. • Messages displayed on the computer screen.

Finding Information

What are you looking for?	Find it here
Drivers and manuals for my printer	*Software and Documentation* disc: The *Software and Documentation* disc contains manuals, drivers, and software for the printer. You can use the *Software and Documentation* disc to install drivers and software, and refer to manuals. Readme files may be included on your *Software and Documentation* disc to provide last-minute updates about technical changes to the printer or advanced technical reference material for experienced users or technicians.
How to set up my printer How to use my printer	*Setup Guide*
Safety information Warranty information	*Important Information* ⚠ **WARNING:** • **Read and follow all safety instructions in the *Important Information* prior to setting up and operating the printer.**
Express Service Code and Service Tag	The Express Service Code and Service Tag are located inside the front cover of the printer. 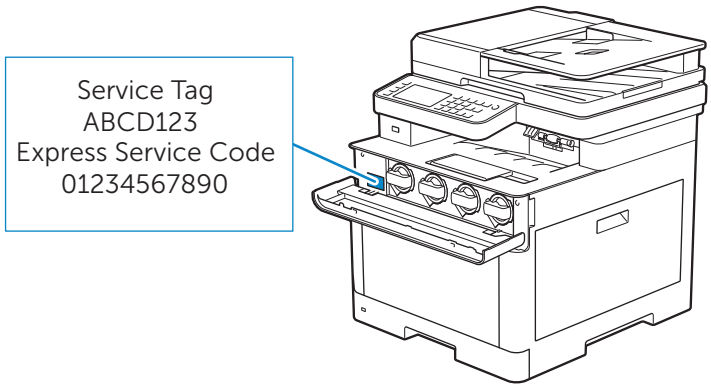
Latest drivers for my printer Documentation for my printer	Visit **www.dell.com/support**.
Answers to technical service and support questions	Visit **www.dell.com/support**. Select your region, and fill in the requested details to access help tools and information. **www.dell.com/support** provides several online tools, including: • Solutions — Troubleshooting hints and tips, articles from technicians, and online courses • Upgrades — Upgrade information for components, such as the print drivers • Customer Care — Contact information, order status, warranty, and repair information • Downloads — Drivers • Manuals— Printer documentation and product specifications

Product Features

This chapter describes the product features and indicates their links.

Dell Document Hub App

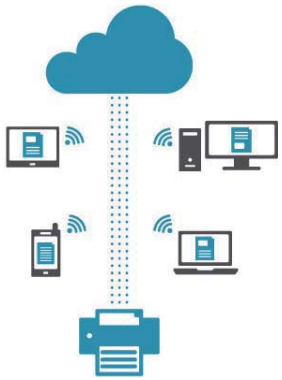

Easily access and share documents, images and digital content with the Dell Document Hub App. This innovative cloud collaboration solution connects your printer and devices to popular cloud services, providing a flexible and secure way to collaborate from virtually anywhere. Using your computer or mobile device, you can search file across multiple cloud services simultaneously to print documents or you can scan documents directly to the cloud using the app. For downloading the app, please visit Microsoft® Windows Store, Google® Play Store and Apple® App Store. For more information about using Dell Document Hub, see the FAQs in Dell.com/documenthub.

Dell Print Management Tool (Dell S2825cdn)

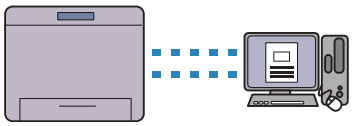

Dell Print Management Tool is a program that monitors and informs you of the printer status and allows you to customize the printer settings. The program also notifies you of the firmware/software updates. Dell Print Management Tool is included on your *Software and Documentation* disc and is installed with the manuals, drivers, and software for the printer. For more information, open the program and click ? on the top right of the main window to see the FAQs.

Dell Printer Hub (Dell H625cdw and Dell H825cdw)

Dell Printer Hub is a program that monitors and informs you of the printer status and allows you to customize the printer settings. The program also notifies you of the firmware/software updates. For convenient use, you can access the Dell Document Hub from the Dell Printer Hub. Dell Printer Hub is included on your *Software and Documentation* disc and is installed with the manuals, drivers, and software for the printer. For more information, open the program and click ? on the top right of the main window to see the FAQs.

Converting and storing with Dell Document Hub (Dell H625cdw and Dell H825cdw)

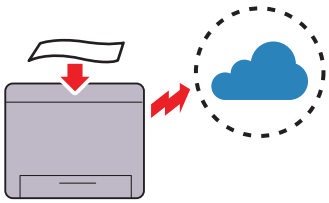

You can scan hard copy documents and store them directly in your preferred cloud storage service with the Dell Document Hub. You can also convert hard copy documents into editable digital content before sending them to the cloud storage. See "Scanning the Document Using Optical Character Recognition (OCR)."

Printing with Dell Document Hub (Dell H625cdw and Dell H825cdw)

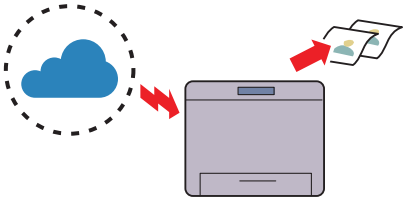

You can easily locate and print documents stored in cloud storage with the Dell Document Hub. You can also search for files across multiple clouds storage services simultaneously.
See "Searching for and Printing Files."

ID Copy

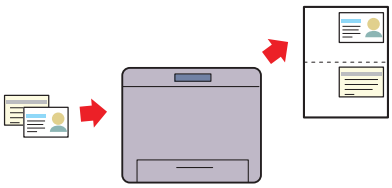

You can copy both sides of an ID card on one side of a single sheet of paper in its original size by a simple operation with the ID Copy feature.
See "Using the ID Copy."

Scan to Network Folder

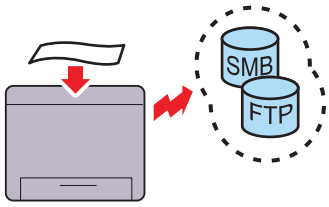

You can transfer scanned data to a PC or a server via Server Message Block (SMB) or FTP without software. Although prior registration of the destination FTP server or PC on the address book is required, it helps save your time.
See "Scanning to a Computer or Server With SMB/FTP."

USB Direct Print

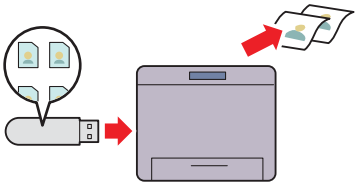

You can print files directly from a USB flash drive without requiring you to start your computer and a program with the USB Direct Print feature.
See "Printing From USB Flash Drive."

Scan to Email

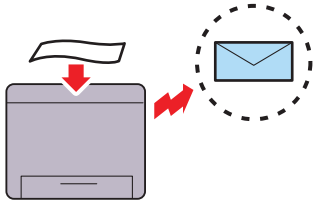

You can send scanned data by e-mail as an attachment with the Scan to Email feature. After scanning, select destination e-mail addresses from the address book on the printer or server or enter the address from the touch panel of the printer.
See "Sending a Scanned Data via E-Mail."

Scan to USB

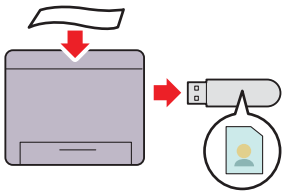

You don't need a PC to save scanned data to a USB flash drive with the Scan to USB feature. Specify the USB flash drive inserted into the printer's port as a data saving location when you scan data.
See "Scanning to a USB Flash Drive."

Scanning From the Document Glass

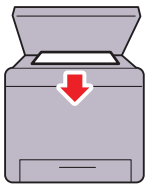

You can scan the pages of a book or a brochure from the document glass.
See "Making Copies From the Document Glass."

Scanning From the Duplex Automatic Document Feeder (DADF)

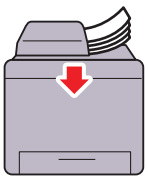

You can scan pieces of unbound paper using the DADF.
See "Making Copies From the DADF."

Printer Overview

Front and Rear View

Front View

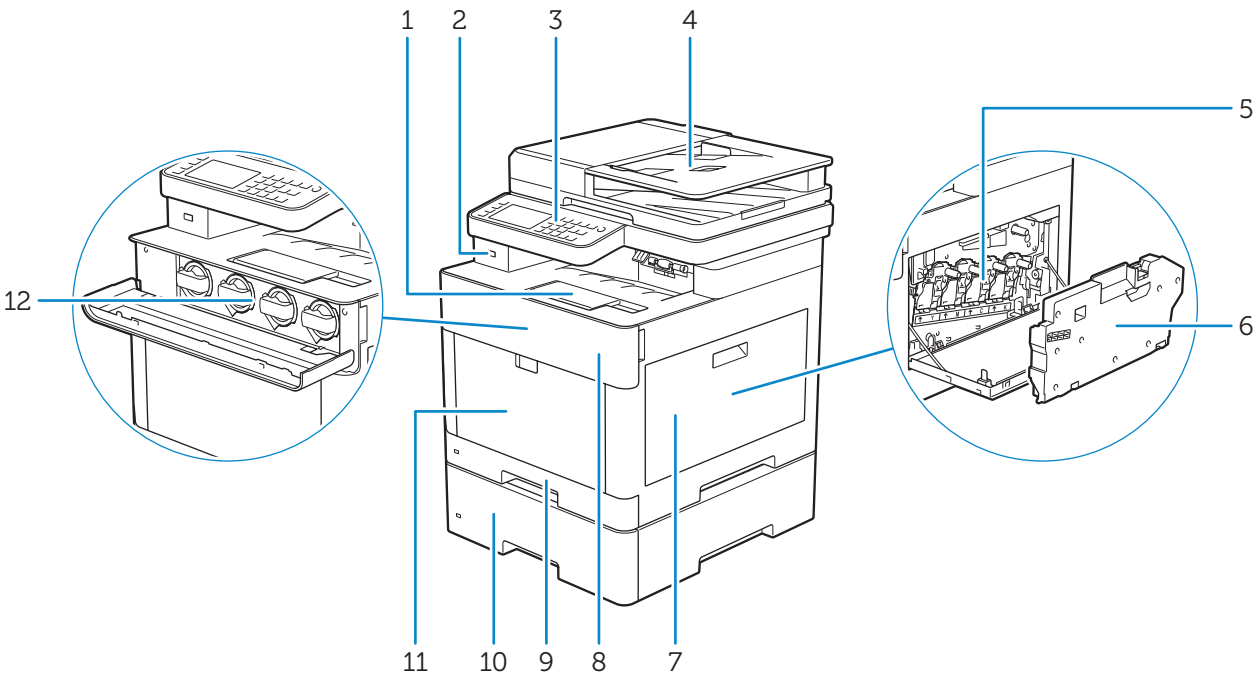

1	Output Tray Extension	7	Right Side Cover
2	Front USB Port	8	Front Cover
3	Operator Panel	9	Tray1
4	Duplex Automatic Document Feeder (DADF)	10	Optional 550-Sheet Feeder (Tray2)
5	Drum Cartridges	11	Multipurpose Feeder (MPF)
6	Waste Toner Box	12	Toner Cartridges

Rear View

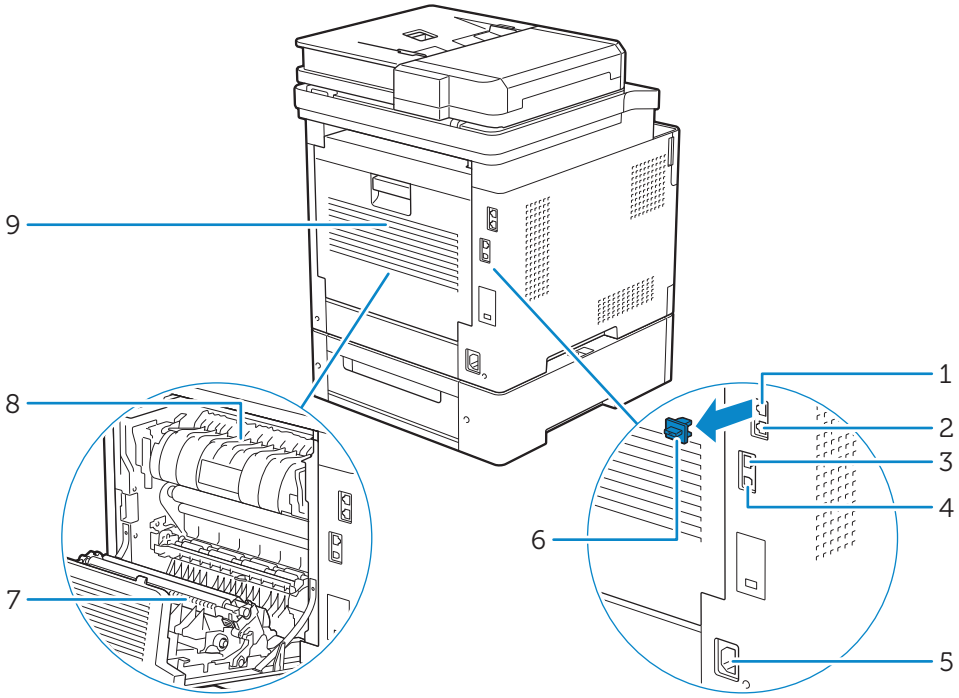

1	Phone Connector	6	"Blue" Plug
2	Wall Jack Connector	7	Duplex Unit
3	Ethernet Port	8	Fusing Unit
4	USB Port	9	Rear Cover
5	Power Connector		

Duplex Automatic Document Feeder (DADF)

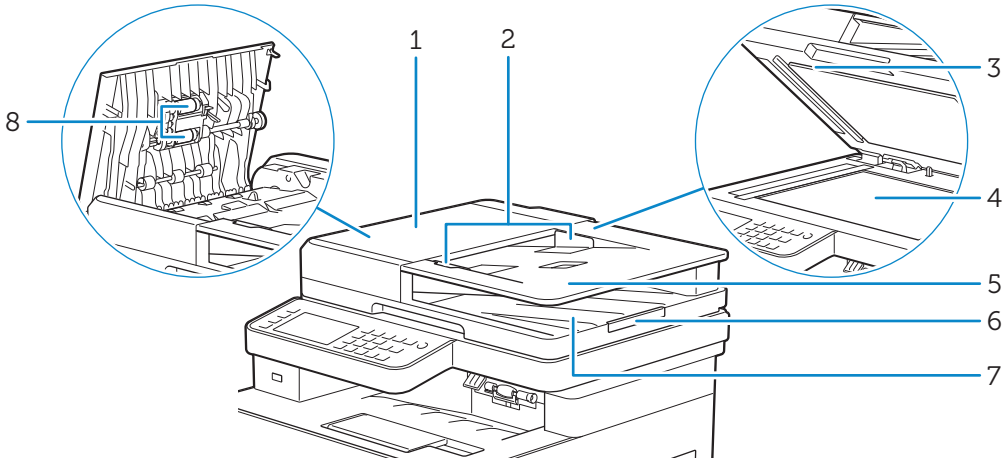

1	DADF Cover	5	Document Feeder Tray
2	Document Guides	6	Document Stopper
3	DADF Chute Cover	7	Document Output Tray
4	Document Glass	8	DADF Feed Rollers

NOTE:

- Pull out the document stopper to prevent the document from falling off the printer.

Operator Panel

Dell H625cdw/Dell H825cdw

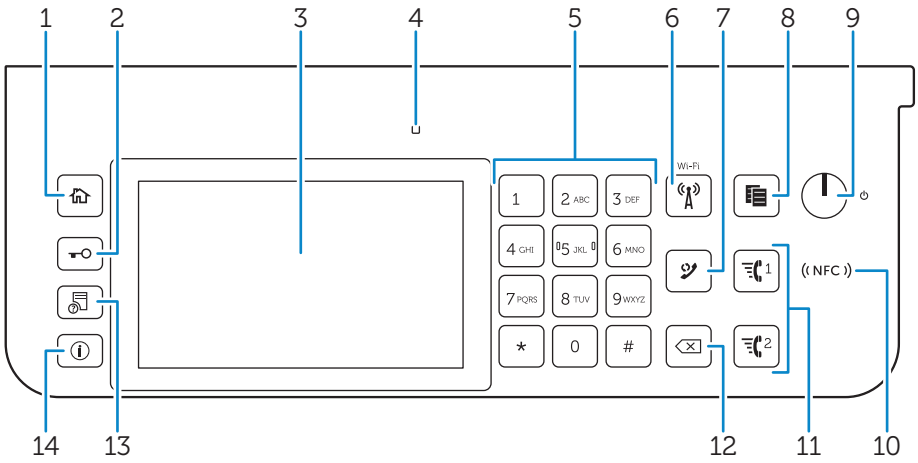

Dell S2825cdn

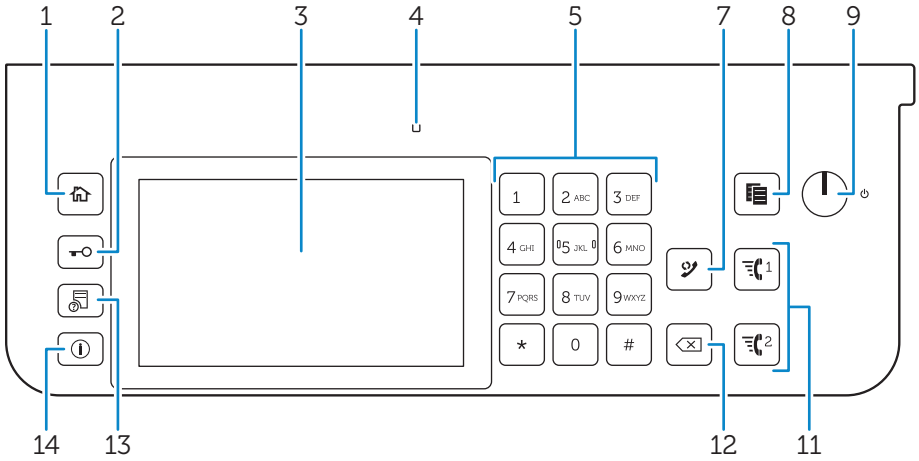

1	(**Home**) button	Moves to the `Home` screen.
2	(**Log In/Out**) button	Logs out if pressed while the user is logged in.
3	Touch Panel	Specifies the settings by directly tapping the screen. Displays various settings, instructions, and error messages.
4	Ready/Error LED	Shows a green light when the printer is ready and a blinking green light when data is being received. Shows an amber light when an error occurs and a blinking amber light when an unrecoverable print error occurs.
5	Number Pad	Enters numbers and characters.
6	(**Wi-Fi**) button*	Shows a white light when the Wi-Fi® is activated and blinks in certain conditions. See "Status of Wi-Fi Button LED."
7	(**Redial/Pause**) button	Re-dials a telephone number. Inserts a pause into a telephone number. When the (**Redial/Pause**) button is pressed, "-" appears on the touch panel.
8	(**Copy**) button	Starts copying the document. Effective only from the `Home` screen while you are logged in to the printer.
9	(**Power**) button	Turns on and off the printer. Also enters or exits the Power Saver mode. When the printer is not used for a while, it enters the Power Saver mode to reduce power consumption. The white light will flash in a breathing pattern (gradually flashes on and off) when the Power Saver mode is active.
10	(NFC) (**NFC**) reader*	Starts communication between the printer and an NFC card or a mobile device with the NFC function when the card or the device is tapped to or waved over the reader.
11	1 / 2 (**Speed Dial 1**/ **Speed Dial 2**) button	Dials the number registered as "001" or "002" respectively of the FAX Speed Dial. Effective only when the `Home` screen is displayed.
12	(**Delete**) button	Deletes numbers and characters.
13	(**Job Status**) button	Moves to the `Job Status` screen. From this screen, you can check or cancel active jobs.
14	(**Information**) button	Moves to the `Information` screen. You can access various information and settings menu, check consumable levels and network status, and print various types of reports and lists.

* This is available on Dell H625cdw and Dell H825cdw.

NOTE:

- Moving to a different menu or returning to a previous screen cancels the current entry or setting. Make sure to select `OK` to save the current entry or setting.

Status of Wi-Fi Button LED

(Wi-Fi) LED		Printer Status
	Off	Wi-Fi has been turned off.
		Connecting to the network via Ethernet cable
		Entering the power saver mode
	On	Wireless link established
	Blinking	Searching/Connecting with wireless LAN access point or router
	Blinking slowly	Wi-Fi is turned on but not connected to an access point or router.

Optional Accessory

The optional 550-sheet feeder is available for the printer.

To install the optional 550-sheet feeder, refer to the installation instruction that comes with the optional 550-sheet feeder.

2

Setting Up the Printer

Overview of the Printer Setup 32

Preparing to Set Up the Printer 33

Connecting Your Printer to a Telephone Line 34

Turning On/Off the Printer 37

Connecting Your Printer to a Computer 44

Connecting Your Printer to Mobile Devices 61

Installing Print Drivers on Linux Computers Using Common UNIX Printing System (CUPS) 72

Setting the IP Address 80

Overview of the Printer Setup

The following are the procedures necessary to set up the printer.

Hardware preparations/Initial settings

↓ "Preparing to Set Up the Printer"
"Turning On/Off the Printer"
"Setting Initial Settings on the Operator Panel"

Connections/Printer setup

"Connecting Your Printer to a Telephone Line"
"Connecting Your Printer to a Computer"
"Connecting Your Printer to Mobile Devices"

Preparing to Set Up the Printer

Space Requirements

Provide enough room to open the printer trays, covers, and optional accessory, and for proper ventilation.

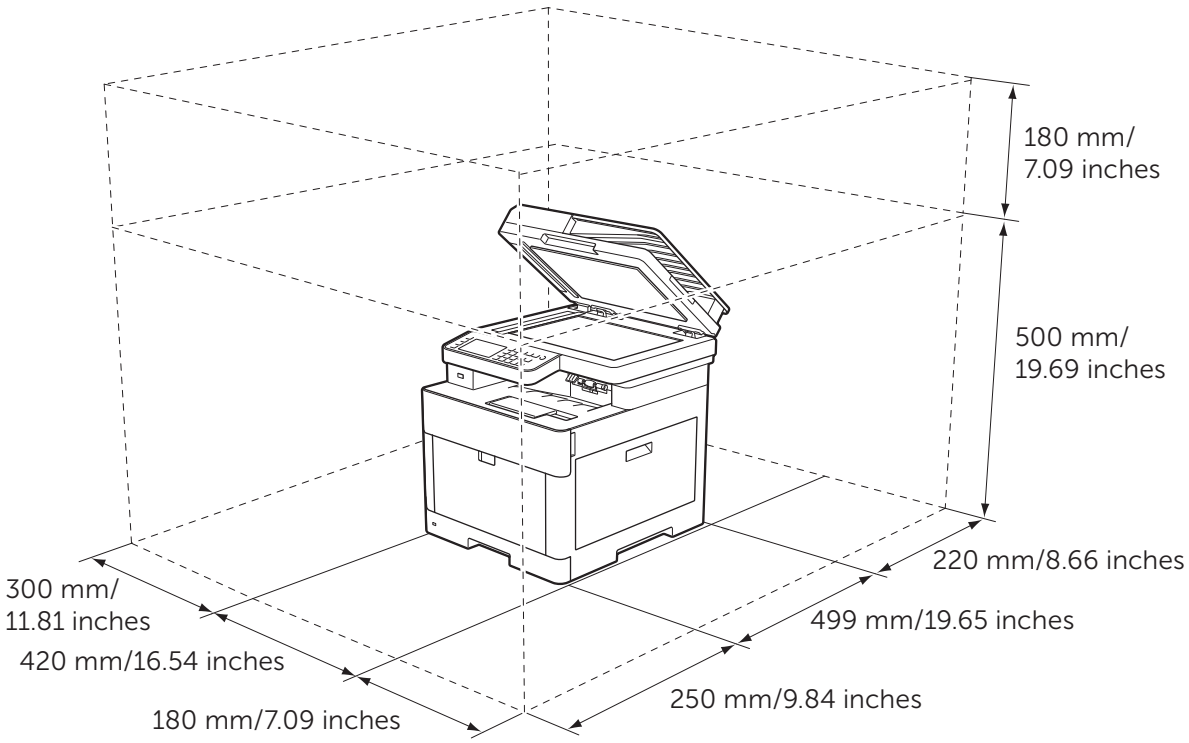

Securing the Printer

To protect the printer from theft, you can use a Kensington lock.

Attach the Kensington lock to the security slot of the printer.

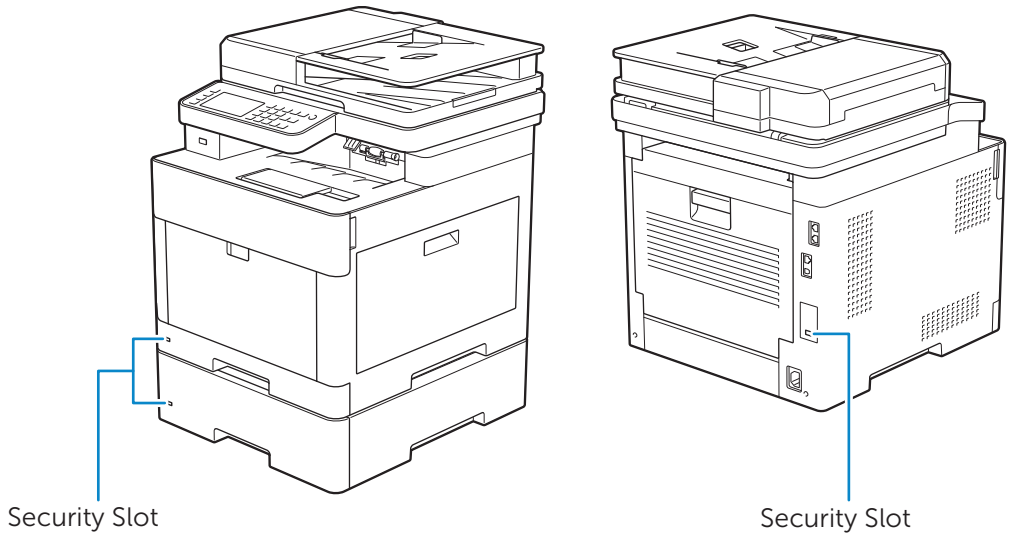

Refer to the operating instructions supplied with the Kensington lock.

Connecting Your Printer to a Telephone Line

CAUTION:

- **Do not connect the printer directly to a Digital Subscriber Line (DSL). This may damage the printer. To use a DSL, you are required to use an appropriate DSL filter. Contact your service provider for the DSL filter.**

Connecting the Printer to the Wall Jack

To connect the printer to a telephone line, connect a telephone line cord into the wall jack connector on the rear of the printer. Connect the other end of the cord into an active wall jack.

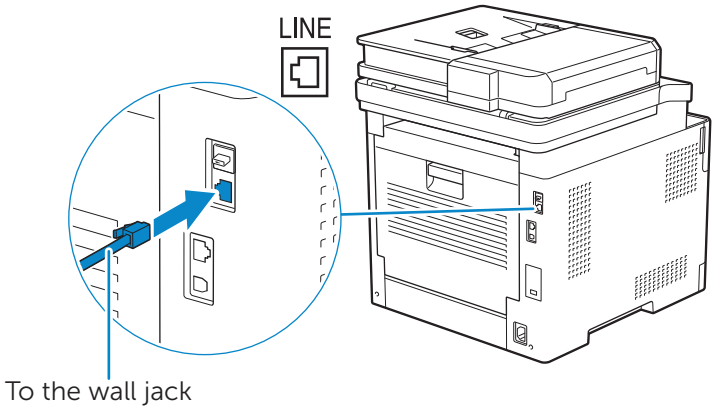

If the phone communication is serial in your country (such as Germany, Sweden, Denmark, Austria, Belgium, Italy, France, and Switzerland), and a "Yellow" terminator is supplied, perform the following procedure:

1 Remove the "Blue" plug from the phone connector.

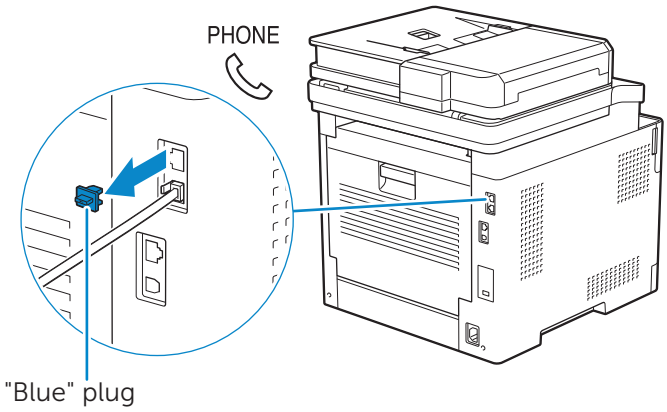

2 Insert the "Yellow" terminator into the phone connector.

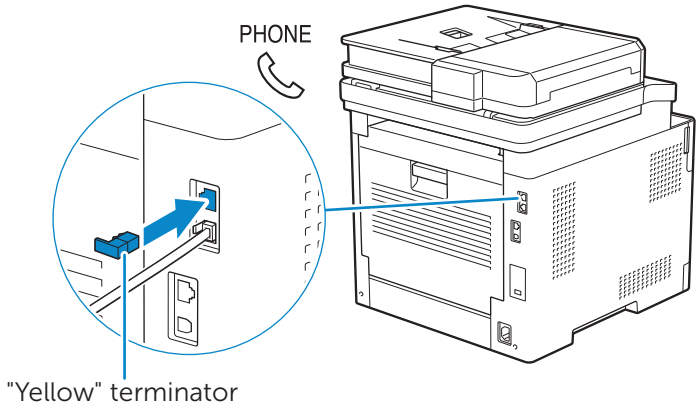

Connecting the Printer to a Modem

You can connect the printer to a computer with a modem on the same telephone line as the printer.

Make sure that the modem is connected to an active wall jack connector, and then connect a telephone line cord into the phone connector on the modem. Connect the other end of the cord into the wall jack connector on the rear of the printer.

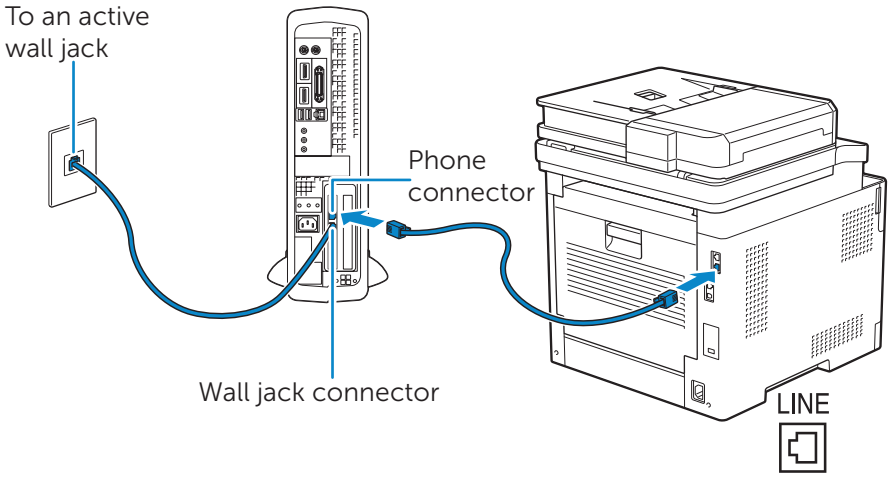

NOTE:

- When using the fax function of the printer, turn off the fax-receive feature of the computer modem.
- Do not use the computer modem if the printer is sending or receiving a fax.
- To fax via the computer modem, follow the instructions provided with your computer modem and fax program.

Connecting a Telephone or Answering Machine

If you share a telephone line with voice calls and fax, you can connect a telephone or an answering machine to the printer to take the voice calls.

1 Make sure that a telephone line is connected to the printer.

   See "Connecting the Printer to the Wall Jack."

2 Remove the "Blue" plug from the phone connector.

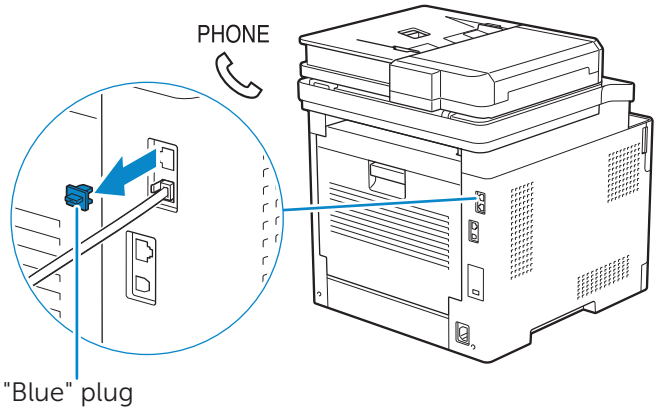

3 Connect a telephone or answering machine line cord into the phone connector on the rear of the printer. Connect the other end of the cord into an external telephone or answering machine.

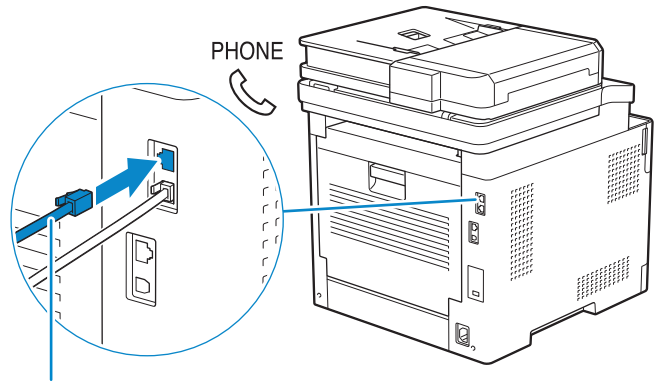

Turning On/Off the Printer

NOTE:

- The images used in this chapter are those of the Dell H625cdw and Dell H825cdw unless otherwise mentioned.

Turning On the Printer

WARNING:

- **Do not use extension cords or power strips.**
- **The printer should not be connected to an uninterruptible power supply (UPS) system.**

1 Connect the power cord to the power connector on the rear of the printer, and then to an electrical outlet.

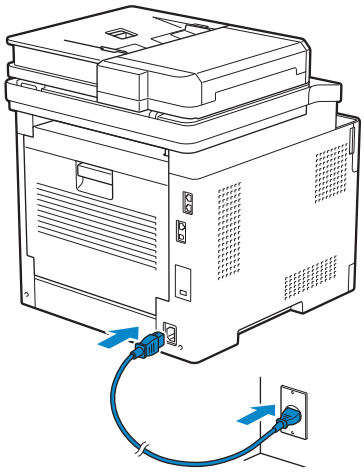

2 Press the ⏻ (**Power**) button on the operator panel.

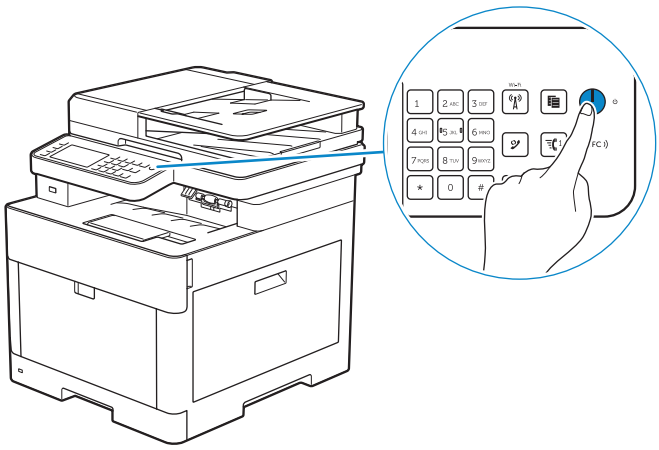

Turning Off the Printer

NOTE:

- The data in the memory is cleared when the printer is turned off.

Press and hold the ⏻ (**Power**) button and select `Power Off` displayed on the operator panel.

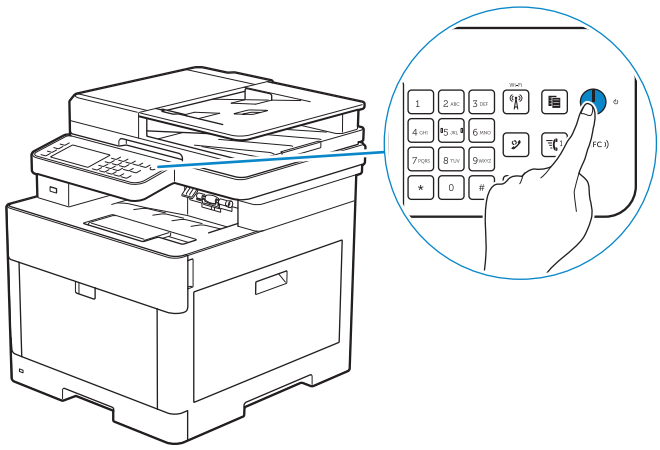

Setting Initial Settings on the Operator Panel

You need to set the printer language, country, clock date, time, and fax settings when you turn on the printer for the first time.

When you turn the printer on, the wizard screen to perform the initial setup appears on the touch panel. Perform the following procedure to set the initial settings.

NOTE:

- If you do not start configuring the initial settings, the printer restarts in 3 minutes, and the `Home` screen appears on the touch panel. After that, you can set the following initial setup by enabling the `Power On Wizard` on the touch panel from:
  The ⓘ (**Information**) button → `Tools` tab → `Admin Settings` → `System Settings` → `General` → `Power On Wizard`.
  You can also set the same setting using the Dell Printer Configuration Web Tool.
  See "Dell™ Printer Configuration Web Tool."

1 Turn on the printer.

2 Tap ▼ until desired language appears, and then tap the desired language.

3 Tap `Next`.

4 Tap `Date & Time`.

Geographic Region	Time Zone
Africa	(UTC) Accra, Bamako, Dakar, Nouakchott
	(UTC) Casablanca
	(UTC +01:00) Algiers, Douala, Libreville, Luanda
	(UTC +01:00) Tunis
	(UTC +01:00) Windhoek
	(UTC +02:00) Cairo
	(UTC +02:00) Harare, Johannesburg, Kinshasa, Tripoli
	(UTC +03:00) Addis Ababa, Khartoum, Mogadishu, Nairobi

Geographic Region	Time Zone
Americas	(UTC -10:00) Adak
	(UTC -09:00) Alaska
	(UTC -08:00) Pacific Time (US & Canada)
	(UTC -08:00) Tijuana
	(UTC -07:00) Arizona, Dawson Creek, Sonora
	(UTC -07:00) Chihuahua, Mazatlan
	(UTC -07:00) Mountain Time (US & Canada)
	(UTC -06:00) Cancun, Mexico City, Monterrey
	(UTC -06:00) Central America
	(UTC -06:00) Central Time (US & Canada)
	(UTC -06:00) Saskatchewan
	(UTC -05:00) Atikokan, Resolute
	(UTC -05:00) Bogota, Lima, Panama, Quito
	(UTC -05:00) Cayman Islands, Jamaica, Port-au-Prince
	(UTC -05:00) Eastern Time (US & Canada)
	(UTC -05:00) Grand Turk
	(UTC -05:00) Havana
	(UTC -04:30) Caracas
	(UTC -04:00) Asuncion
	(UTC -04:00) Atlantic Time (Canada)
	(UTC -04:00) Blanc-Sablon
	(UTC -04:00) Caribbean Islands
	(UTC -04:00) Cuiaba
	(UTC -04:00) Georgetown, La Paz, Manaus
	(UTC -04:00) Thule
	(UTC -03:30) St. John's
	(UTC -03:00) Brasilia, Cayenne, Paramaribo
	(UTC -03:00) Buenos Aires
	(UTC -03:00) Greenland
	(UTC -03:00) Miquelon
	(UTC -03:00) Montevideo
	(UTC -02:00) Noronha
Antarctica	(UTC -04:00) Palmer Archipelago, Santiago
	(UTC -03:00) Rothera
	(UTC +03:00) Syowa
	(UTC +06:00) Mawson, Vostok
	(UTC +07:00) Davis
	(UTC +08:00) Casey
	(UTC +10:00) Dumont d'Urville
	(UTC +12:00) McMurdo

Geographic Region	Time Zone
Asia	(UTC +02:00) Amman
	(UTC +02:00) Beirut
	(UTC +02:00) Damascus
	(UTC +02:00) Jerusalem
	(UTC +02:00) Nicosia
	(UTC +02:00) Palestine
	(UTC +03:00) Aden, Baghdad, Qatar, Riyadh
	(UTC +03:30) Tehran
	(UTC +04:00) Baku
	(UTC +04:00) Dubai, Muscat, Tbilisi
	(UTC +04:00) Yerevan
	(UTC +04:30) Kabul
	(UTC +05:00) Aqtau, Aqtobe, Ashgabat, Samarkand
	(UTC +05:00) Ekaterinburg
	(UTC +05:00) Karachi
	(UTC +05:30) Colombo, Kolkata
	(UTC +05:45) Kathmandu
	(UTC +06:00) Almaty, Bishkek, Dhaka, Thimphu
	(UTC +06:00) Novosibirsk, Omsk
	(UTC +06:30) Yangon (Rangoon)
	(UTC +07:00) Bangkok, Ho Chi Minh, Hovd, Jakarta
	(UTC +07:00) Krasnoyarsk
	(UTC +08:00) Chongqing, Hong Kong, Shanghai
	(UTC +08:00) Irkutsk
	(UTC +08:00) Kuala Lumpur, Makassar, Manila, Singapore
	(UTC +08:00) Taipei
	(UTC +08:00) Ulaan Baatar
	(UTC +09:00) Dili, Jayapura
	(UTC +09:00) Pyongyang
	(UTC +09:00) Seoul
	(UTC +09:00) Tokyo
	(UTC +09:00) Yakutsk
	(UTC +10:00) Sakhalin, Vladivostok
	(UTC +11:00) Magadan
	(UTC +12:00) Anadyr, Kamchatka
Atlantic Ocean	(UTC -04:00) Bermuda
	(UTC -04:00) Stanley
	(UTC -02:00) South Georgia Island
	(UTC -01:00) Azores, Scoresbysund
	(UTC -01:00) Cape Verde
	(UTC) Reykjavik

Geographic Region	Time Zone
Australia	(UTC +08:00) Perth
	(UTC +08:45) Eucla
	(UTC +09:30) Adelaide
	(UTC +09:30) Darwin
	(UTC +10:00) Brisbane, Lindeman
	(UTC +10:00) Hobart, Melbourne, Sydney
	(UTC +10:30) Lord Howe Island
Europe	(UTC) Dublin, Edinburgh, Lisbon, London
	(UTC +01:00) Amsterdam, Berlin, Rome, Stockholm, Vienna
	(UTC +01:00) Belgrade, Bratislava, Budapest, Prague
	(UTC +01:00) Brussels, Copenhagen, Madrid, Paris
	(UTC +01:00) Sarajevo, Skopje, Warsaw, Zagreb
	(UTC +02:00) Athens, Bucharest, Istanbul
	(UTC +02:00) Helsinki, Kiev, Riga, Sofia
	(UTC +02:00) Kaliningrad, Minsk
	(UTC +03:00) Moscow
	(UTC +04:00) Samara
Indian Ocean	(UTC +03:00) Antananarivo, Comoro Islands, Mayotte
	(UTC +04:00) Mahe, Reunion
	(UTC +04:00) Mauritius
	(UTC +05:00) Kerguelen, Maldives
	(UTC +06:00) Chagos
	(UTC +06:30) Cocos Islands
	(UTC +07:00) Christmas Island
Pacific Ocean	(UTC -11:00) Midway Island, Niue, Samoa
	(UTC -10:00) Cook Islands, Hawaii, Tahiti
	(UTC -09:30) Marquesas Islands
	(UTC -09:00) Gambier Islands
	(UTC -08:00) Pitcairn Islands
	(UTC -06:00) Easter Island
	(UTC -06:00) Galapagos Islands
	(UTC +09:00) Palau
	(UTC +10:00) Guam, Port Moresby, Saipan
	(UTC +11:00) Efate, Guadalcanal, Kosrae
	(UTC +11:30) Norfolk Island
	(UTC +12:00) Auckland
	(UTC +12:00) Fiji, Marshall Islands
	(UTC +12:45) Chatham
	(UTC +13:00) Tongatapu
	(UTC +14:00) Kiritimati

5 Tap ▼ until the desired geographic region appears, and then tap the desired geographic region.

6 Tap ▼ until the desired time zone appears, and then tap the desired time zone.

7 Tap OK → Date.

8 Select a date format from the menu displayed by selecting Format.

9 After tapping the box under Year, tap – or +, or use the number pad to enter the desired value.

Repeat this step to enter the desired value for Month and Day.

10 Tap OK → Time.

11 Select the time format from 12 Hour or 24 Hour. If you select 12 Hour, select AM or PM.

12 After tapping the box under Hour, use the number pad to enter the desired value.

Repeat this step to enter the desired value for Minute.

13 Tap OK → Next.

14 Perform either of the following:

To set Fax settings, select Yes, Setup FAX and perform the following procedure:

a Enter the fax number of the printer using the number pad.

b Tap Country.

c Tap ▼ until the desired country appears, and then tap the desired country.

The default paper size is automatically set when you select a country.

Australia	A4
Austria	A4
Belgium	A4
Canada	Letter
Colombia	Letter
Denmark	A4
Finland	A4
France	A4
Germany	A4
Ireland	A4
Italy	A4
Malaysia	A4
Mexico	Letter
Netherlands	A4
New Zealand	A4
Norway	A4
Singapore	A4
South Africa	A4
Spain	A4
Sweden	A4
Switzerland	A4
Thailand	A4
United Kingdom	A4
United States	Letter

Unknown	Letter

d Tap `Next`.

To end the settings, select `No, I'll Do It Later`.

15 When the `Setup Complete (Congratulations, setup is complete.)` screen appears, tap `OK`.

The printer restarts.

Connecting Your Printer to a Computer

You can connect the printer directly to your computer with USB, or connect the printer to a wireless or wired network.

NOTE:

- Wireless network is available on Dell H625cdw and Dell H825cdw.

Overview

The following are the simple procedures recommended to connect the printer.

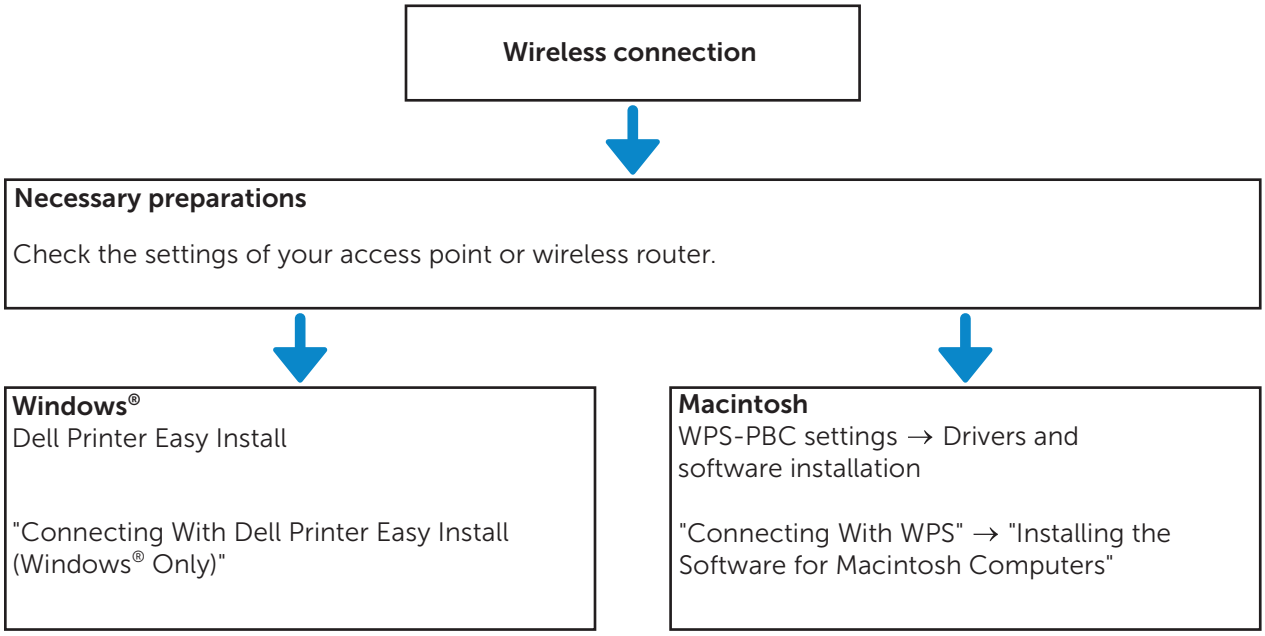

For wireless connection procedures other than the above, see "Connecting to a Wireless Network."

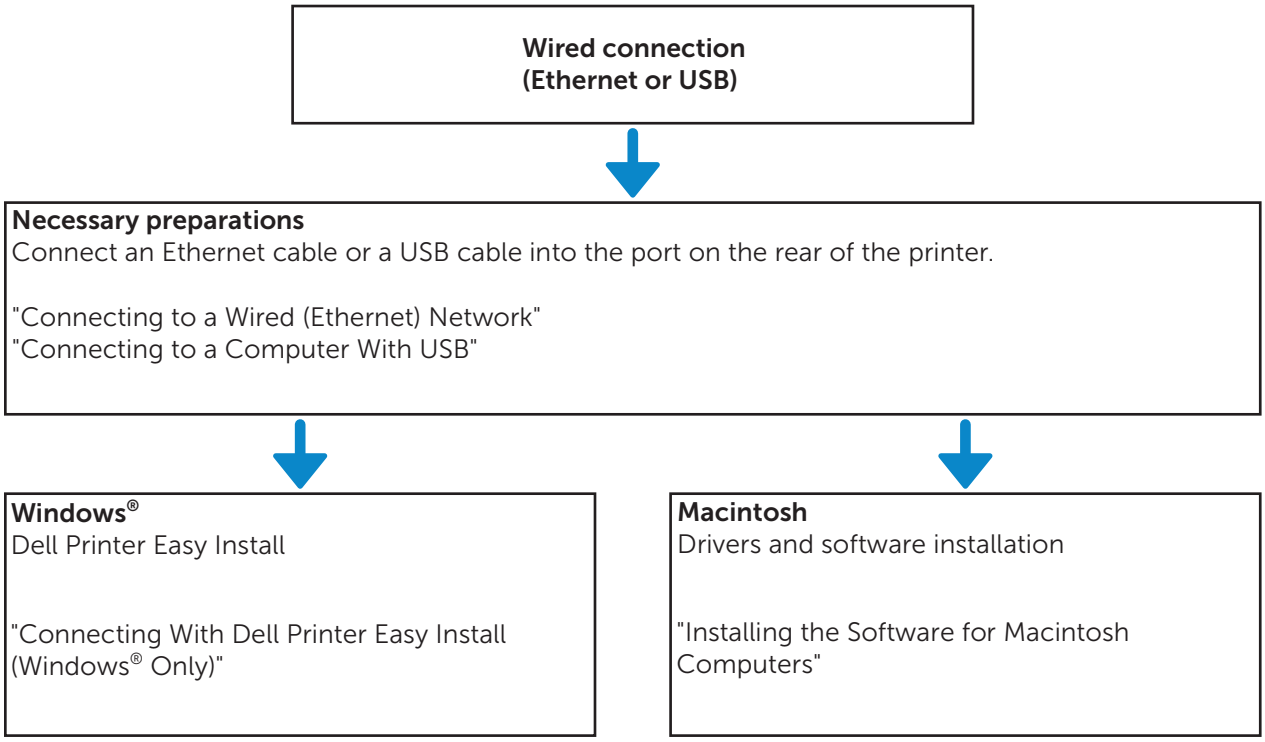

Connecting to a Wireless Network

Connecting With Dell Printer Easy Install (Windows® Only)

1 Insert the *Software and Documentation* disc in your computer.
Alternatively, go to **www.dell.com/support**, enter the Service Tag of your printer, download the latest software and driver, and then open the file that you downloaded.

NOTE:
- Make sure that there is no cable connected between the printer and your computer.

2 On the Dell Printer Easy Install window, click **Next**. Dell Printer Easy Install begins to search for your printer.

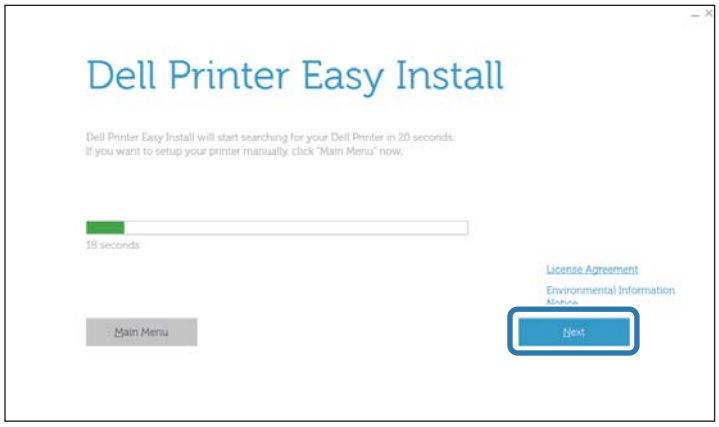

3 Wait for Dell Printer Easy Install wizard to find your printer.

4 After the printer is found, click **Install** to complete the setup.

Connecting With WPS

WPS-PBC and WPS-PIN are simple methods to setup wireless connection.

For WPS-PBC, press the button provided on your access point or wireless router, and then perform WPS-PBC setting on the operator panel. This setting is available only when the access point supports WPS.

For WPS-PIN, enter PIN assignments to your printer and computer. This setting, performed on an access point, is available only when the access points of your wireless router support WPS.

NOTE:

- This is available on Dell H625cdw and Dell H825cdw.
- Make sure to connect the printer to a wireless network and disconnect the Ethernet cable.
- Before starting WPS-PBC, check where the WPS button (button name may vary) is located on the wireless LAN access point. For details about WPS operation on the wireless LAN access point, refer to the manual supplied with the wireless LAN access point.
- For WPS operation on the wireless LAN access point, refer to the manual supplied with the wireless LAN access point.

WPS-PBC (Using the Wi-Fi Protected Setup™ (WPS) Button)

1 Press and hold the (**Wi-Fi**) button for more than 2 seconds.

If `Panel Lock Control` is set to `Enable`, enter the password. See "Panel Lock."

NOTE:

- If you press the (**Wi-Fi**) button for less than 1 second, the `Wi-Fi | WPS` screen appears.
- Make sure that the message `Push WPS Button on router` is displayed, and then start the WPS-PBC on the wireless LAN access point (Registrar) within 2 minutes.

2 Turn off the printer, and then turn it on again.

Wireless LAN connection setting is complete.

After the setting is complete, install the software. See "Installing the Software for Windows® Computers" or "Installing the Software for Macintosh Computers."

WPS-PBC (Using the Touch Panel)

When using the (**Wi-Fi**) button:

1 Press the (**Wi-Fi**) button.

If `Panel Lock Control` is set to `Enable`, enter the password. See "Panel Lock."

2 Tap `WPS (Connect via PBC)`.

3 Turn off the printer, and then turn it on again.

When using the (**Information**) button:

1 Press the (**Information**) button.

2 Tap the `Tools` tab → `Admin Settings` → `Network` → `Wi-Fi` → `WPS Setup` → `Push Button Configuration` → `Start Configuration`.

3 Turn off the printer, and then turn it on again.

Wireless LAN connection setting is complete.

After the setting is complete, install the software. See "Installing the Software for

Windows® Computers" or "Installing the Software for Macintosh Computers."

WPS-PIN

1 Press the (**Wi-Fi**) button.

If `Panel Lock Control` is set to `Enable`, enter the password. See "Panel Lock."

2 Tap `WPS (Connect via PIN)`.

3 Turn off the printer, and then turn it on again.

Wireless LAN connection setting is complete.

After the setting is complete, install the software. See "Installing the Software for Windows® Computers" or "Installing the Software for Macintosh Computers."

NOTE:

- Write down the eight-digit PIN code displayed on the touch panel. To print the PIN code, tap `Print PIN Code`.
- Make sure that the message `Operate Wireless Router` is displayed, and then enter the PIN code into the wireless LAN access point (Registrar).

Manually Connecting to a Wireless Network

Connect to the wireless network using the SSID of your access point or wireless router. For details about the SSID of your access point or wireless router, contact your network administrator.

Auto SSID Setup

1 Press the (**Information**) button.

2 Tap the `Tools` tab → `Admin Settings` → `Network` → `Wi-Fi`.

If `Panel Lock Control` is set to `Enable`, enter the password. See "Panel Lock."

3 Tap `Wi-Fi Setup Wizard`.

The printer searches for access points on the wireless network.

4 Tap ▼ until the desired access point appears, and then select the access point.

If the desired access point does not appear, proceed to "Manual SSID Setup."

NOTE:

- Some SSIDs are hidden and may not be displayed. If the SSID is not detected, turn on SSID broadcast from the router.

5 Tap `Next`.

6 Enter the WEP key or passphrase.

If the encryption type of the selected access point is WEP in step 4:

a Tap the `WEP Key` text box, and then enter the WEP key.

b Tap `OK`.

If the encryption type of the selected access point is WPA™, WPA2™, or Mixed in step 4:

a Tap the `Passphrase` text box, and then enter the passphrase.

b Tap OK.

NOTE:

- A passphrase is an encryption key and may be described on access points or routers. For details, refer to the manual supplied with the access point or router.

7 Turn off the printer, and then turn it on again.

Wireless LAN connection setting is complete.

After the setting is complete, install the software. See "Installing the Software for Windows® Computers" or "Installing the Software for Macintosh Computers."

Manual SSID Setup

1 Press the ⓘ (**Information**) button.

2 Tap the Tools tab → Admin Settings → Network → Wi-Fi → Wi-Fi Setup Wizard.

If Panel Lock Control is set to Enable, enter the password. See "Panel Lock."

3 Select the Manual SSID Setup check box, and then tap Next.

4 Enter the SSID, and then tap Next.

5 Select the network mode from Infrastructure and Ad-hoc according to your environment, and then tap Next.

If you select Infrastructure, proceed to step 6.

If you select Ad-hoc, proceed to step 7.

NOTE:

- When **Wi-Fi Direct** is set to **Enable**, you cannot select Ad-hoc.

6 Select the encryption type from No Security, Mixed mode PSK, WPA2-PSK-AES, or WEP.

If you do not set security for your wireless network:

a Tap ▼ until No Security appears, and then tap No Security.

b Tap OK.

If you use Mixed mode PSK or WPA2-PSK-AES encryption:

a Tap ▼ until Mixed mode PSK or WPA2-PSK-AES appears, and then tap the desired encryption type.

b Tap the Passphrase text box, and then enter the passphrase.

c Tap OK.

If you use WEP encryption:

a Tap ▼ until WEP appears, and then tap WEP.

b Tap the WEP Key text box, and then enter the WEP key.

c Tap Transmit Key, and then select the desired transmit key from Auto or WEP Key 1 to WEP Key 4.

d Tap OK.

Proceed to step 8.

NOTE:

- A passphrase is an encryption key and may be described on access points or routers. For details, refer to the manual supplied with the access point or router.

7 Select the encryption type from `No Security` or `WEP`.

If you do not set security for your wireless network:

a Tap ▼ until `No Security` appears, and then tap `No Security`.

b Tap `OK`.

To use WEP encryption:

a Tap ▼ until `WEP` appears, and then tap `WEP`.

b Tap the `WEP Key` text box, and then enter the WEP key.

c Tap `Transmit Key`, and then select the desired transmit key from `WEP Key 1` to `WEP Key 4`.

d Tap `OK`.

8 Turn off the printer, and then turn it on again.

Wireless LAN connection setting is complete.

After the setting is complete, install the software. See "Installing the Software for Windows® Computers" or "Installing the Software for Macintosh Computers."

Changing the Wireless Settings

To change the wireless settings of the printer from your computer, start the Dell Printer Configuration Web Tool. See "Dell™ Printer Configuration Web Tool."

You can also set the same settings using the *Software and Documentation* disc.

Connecting to a Wired (Ethernet) Network

Connecting the Ethernet Cable

To connect the printer to an Ethernet network, connect an Ethernet cable into the Ethernet port on the rear of the printer, and then connect the other end of the cable into an Ethernet outlet or a hub.

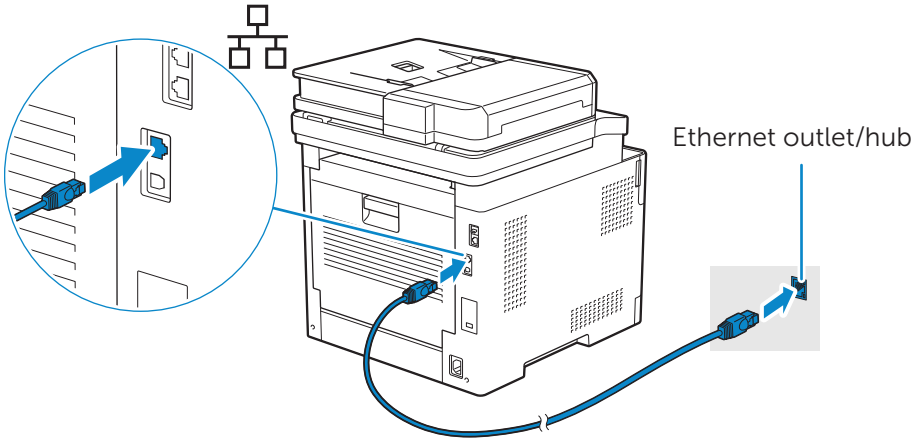

NOTE:

- To connect to a wireless network, make sure to disconnect the Ethernet cable. The printer will be connected to the same wireless network that the computer used is currently connected.

Connecting With Dell Printer Easy Install (Windows® Only)

1 Insert the *Software and Documentation* disc in your computer.

Alternatively, go to **www.dell.com/support**, enter the Service Tag of your printer, download the latest software and driver, and then open the file that you downloaded.

NOTE:

- Make sure that the printer is connected to your computer using an Ethernet cable.

2 On the Dell Printer Easy Install window, click **Next**. Dell Printer Easy Install begins to search for your printer.

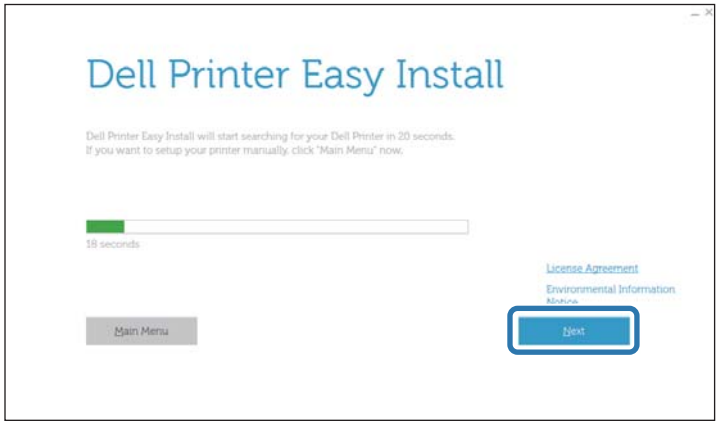

3 Wait for Dell Printer Easy Install wizard to find your printer.

4 After the printer is found, select the printer, and then click **Finish** to complete the setup.

Configuring With Other Methods

For details, see "Installing the Software for Windows® Computers" or "Installing the Software for Macintosh Computers."

Connecting to a Computer With USB

Connecting the USB Cable

To connect the printer directly to the computer, connect the smaller USB connector into the USB port on the rear of the printer, and then connect the other end of the cable into a USB port of the computer.

CAUTION:

- **Do not connect the printer to a USB hub.**

NOTE:

- Make sure to match the USB symbol on the cable plug with the USB symbol on the printer.

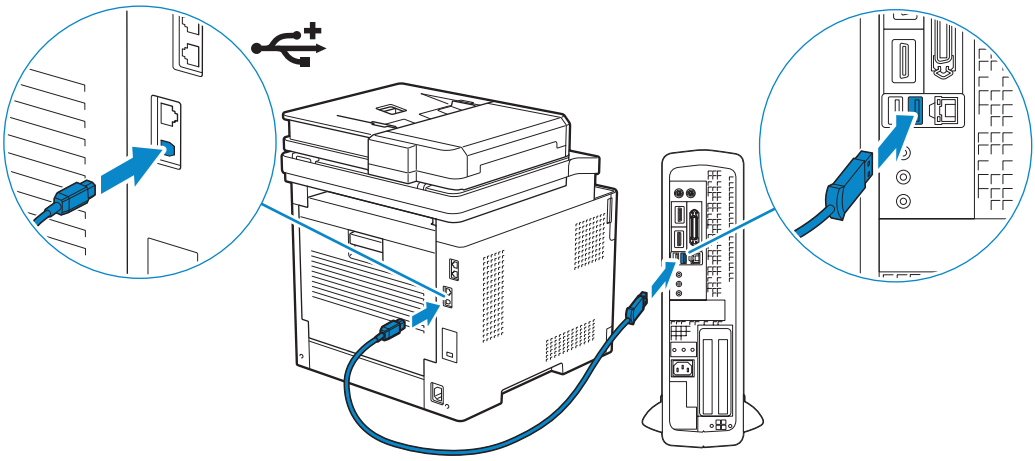

Connecting With Dell Printer Easy Install (Windows® Only)

1 Insert the *Software and Documentation* disc in your computer.

Alternatively, go to **www.dell.com/support**, enter the Service Tag of your printer, download the latest software and driver, and then open the file that you downloaded.

NOTE:

- Make sure that the printer is connected to your computer using a USB cable.

2 On the Dell Printer Easy Install window, click **Next**. Dell Printer Easy Install begins to search for your printer.

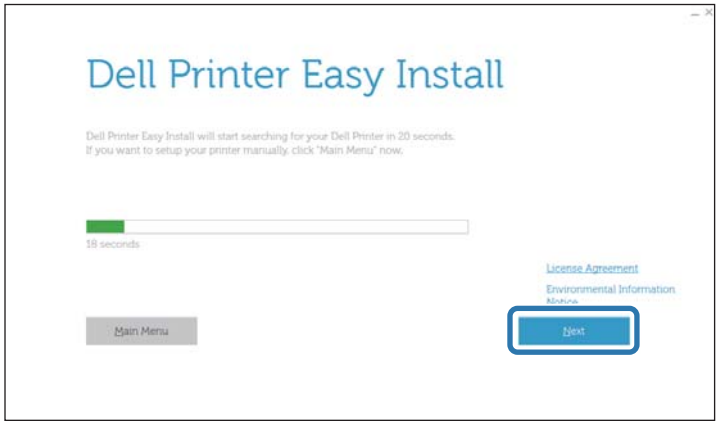

3 Wait for Dell Printer Easy Install wizard to find and install your printer.

Configuring With Other Methods

For details, see "Installing the Software for Windows® Computers" or "Installing the Software for Macintosh Computers."

Installing the Software for Windows® Computers

Installing the Software and Print Drivers with Dell Printer Easy Install

Insert the *Software and Documentation* disc into your computer.

If the *Software and Documentation* disc does not start, perform the following.

The following procedure uses Windows® 7/Windows® 10 as an example.

1 Click **Start** → **All Programs** → **Accessories** → **Run**.
   For Windows® 10: Right-click the Start button, and then click **Run**.

2 Enter `D:\setup_assist.exe` (*D* is the drive letter of the optical drive), and then click **OK**.

3 In the **Dell Printer Easy Install** window, click **Setup**.

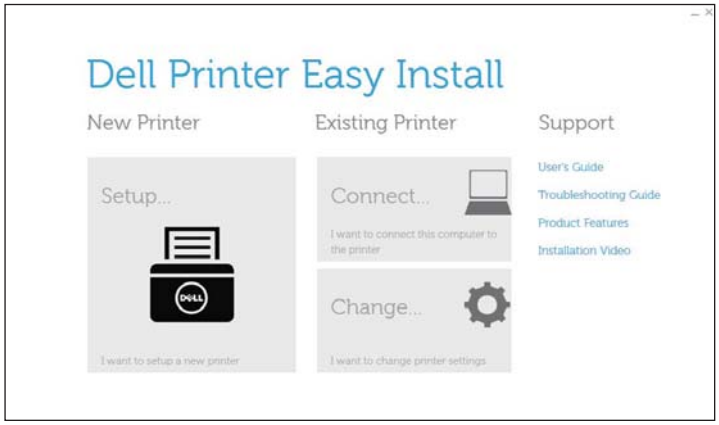

4 Select a connection method to the printer.

5 Follow the on-screen instructions until the **Ready to Print!** screen appears.

6 Click **Finish**.
   If necessary, click **Print Test Page** to verify installation.

Installing the Software and Print Drivers When the Printer is Connected to the Network or Computer

If the printer connection via USB/Ethernet/Wireless is already configured, perform the following to install the print driver and software. You can install the driver for a printer

with USB connection or network connection.

NOTE:

- To install the print driver with network connection, you need the IP address that is assigned to the printer. To check the IP address of the printer, perform one of the procedures in "Verifying the IP Settings."
- Wireless network is available on Dell H625cdw and Dell H825cdw.

Installing the Printer Control Language (PCL), PostScript (PS), and Fax Driver with USB Cable Connection

NOTE:

- If you are connecting the printer to a network, see "Installing the Printer Control Language (PCL), PostScript (PS), and Fax Driver with Network Connection."

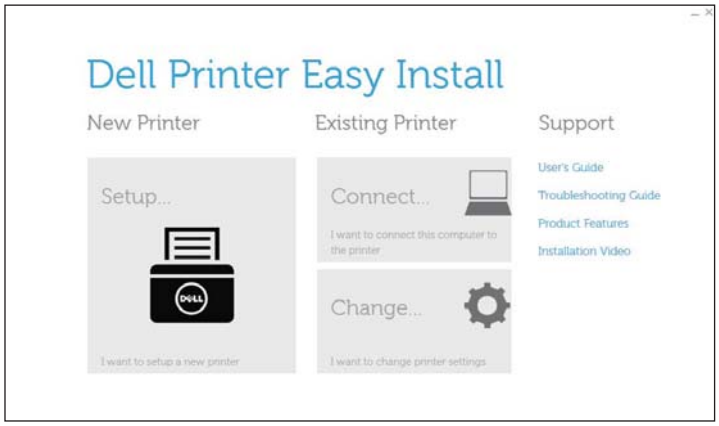

1 In the **Dell Printer Easy Install** window, click **Connect**.

2 Select **USB Cable Connection**, and then click **Next**.

3 Follow the on-screen instructions until the **Ready to Print!** screen appears.

4 Click **Finish**.

If necessary, click **Print Test Page** to verify installation.

Installing the XML Paper Specification (XPS) Print Driver with USB Cable Connection

NOTE:

- XML Paper Specification (XPS) driver is supported on Windows Vista® or later.
- If you are using Windows Vista® or Windows Server® 2008, you need to install Service Pack 2 or later, and then the Windows® Platform Update (KB971644). The update (KB971644) is available for download from Windows® Update.

The following procedure uses Windows® 7 and Windows® 10 as examples.

For Windows® 7:

1 Extract the following zip file to your desired location.

`D:\Drivers\XPS\Win_7Vista\XPS-V3_H625cdw_H825cdw_S2825cdn.zip` (*D* is the drive letter of the optical drive)

2 Click **Start** → **Devices and Printers** → **Add a printer**.

If the **User Account Control** dialog box appears, click **Yes**.

NOTE:

- If you are logged on as an administrator on the computer, click **Yes**; otherwise, contact your administrator to continue the desired action.

3 Click **Add a local printer**.

4 Select the port connected to this product, and then click **Next**.

5 Click **Have Disk**.

The **Install From Disk** dialog box is displayed.

6 Click **Browse**, and then select the inf file in the folder extracted in step 1.

7 Click **OK**.

8 Select the printer name, and then click **Next**.

If you want to change the printer name, enter the printer name in the **Printer name** box, and then click **Next**.

9 Select either **Do not share this printer** or **Share this printer so that others on your network can find and use it**, and then click **Next**.

10 When the driver installation is completed, click **Print a test page** to verify installation.

If you want to use this printer as the default printer, select the **Set as the default printer** check box, and then click **Next**.

11 Click **Finish**.

For Windows® 10:

1 Extract the zip file you downloaded to your desired location.

`D:\Drivers\XPS\Win_8\XPS-V4_H625cdw_H825cdw_S2825cdn.zip` (*D* is the drive letter of the optical drive)

2 Right-click the Start button, and then click **Control Panel**.

3 Click **Hardware and Sound** → **Devices and Printers** → **Add a printer**.

4 Click **The printer that I want isn't listed**.

5 Click **Add a local printer or network printer with manual settings** → **Next** → **Next** → **Have Disk**.

The **Install From Disk** dialog box is displayed.

6 Click **Browse**, and then select the inf file in the folder extracted in step 1.

7 Click **OK**.

8 Select the printer name, and then click **Next**.

If you want to change the printer name, enter the printer name in the **Printer name** box, and then click **Next**.

9 When the driver installation is completed, click **Print a test page** to verify installation.

If you want to use this printer as the default printer, select the **Set as the default printer** check box.

10 Click **Finish**.

Installing the Printer Control Language (PCL), PostScript (PS), and Fax Driver with Network Connection

NOTE:

- To use the printer in a Linux environment, you need to install a Linux driver. See "Installing Print Drivers on Linux Computers Using Common UNIX Printing System (CUPS)."

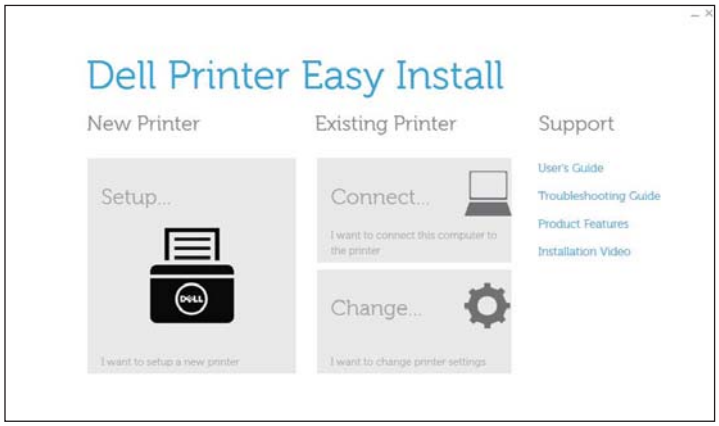

1 In the **Dell Printer Easy Install** window, click **Connect**.

2 Select **Wireless or Ethernet Connection**, and then click **Next**.

   NOTE:

   - Wireless network is available on Dell H625cdw and Dell H825cdw.

3 Follow the on-screen instructions until the **Ready to Print!** screen appears.

4 Click **Finish** to exit the wizard.

   If necessary, click **Print Test Page** to verify installation.

Installing the XML Paper Specification (XPS) Print Driver with Network Connection

For Windows® 7:

1 Extract the following zip file to your desired location.

   `D:\Drivers\XPS\Win_7Vista\XPS-V3_H625cdw_H825cdw_S2825cdn.zip` (*D* is the drive letter of the optical drive)

2 Click **Start** → **Devices and Printers** → **Add a printer**.

3 Click **Add a network, wireless or Bluetooth printer**.

   NOTE:

   - Wireless network is available on Dell H625cdw and Dell H825cdw.

4 Select a printer, and then click **Next**.

   Or

   Click **The printer that I want isn't listed**.

   If you select the printer, proceed to step 7.

   If you click **The printer that I want isn't listed**, proceed to step 5.

5 Select **Add a printer using a TCP/IP address or host name**, and then click **Next**.

6 Select **TCP/IP Device** from **Device type**, enter the IP address for **Hostname or IP address**, and then click **Next**.

NOTE:

- If the **User Account Control** dialog box appears and if you are the administrator of the computer, click **Yes**. Otherwise, contact your administrator to continue the desired action.

7 Click **Have Disk**.

The **Install From Disk** dialog box is displayed.

8 Click **Browse**, and then select the inf file in the folder extracted in step 1.

9 Click **OK**.

10 Select the printer name, and then click **Next**.

If you want to change the printer name, enter the printer name in the **Printer name** box, and then click **Next**.

11 Select either **Do not share this printer** or **Share this printer so that others on your network can find and use it**, and then click **Next**.

12 When the driver installation is completed, click **Print a test page** to verify installation.

If you want to use this printer as the default printer, select the **Set as the default printer** check box, and then click **Next**.

13 Click **Finish**.

For Windows® 10:

1 Extract the zip file you downloaded to your desired location.

`D:\Drivers\XPS\Win_8\XPS-V4_H625cdw_H825cdw_S2825cdn.zip` (*D* is the drive letter of the optical drive)

2 Right-click the Start button, and then click **Control Panel**.

3 Click **Hardware and Sound** → **Devices and Printers** → **Add a printer**.

4 Click **The printer that I want isn't listed**.

5 Click **Add a local printer or network printer with manual settings** → **Next** → **Next** → **Have Disk**.

The **Install From Disk** dialog box is displayed.

6 Click **Browse**, and then select the inf file in the folder extracted in step 1.

7 Click **OK**.

8 Select the printer name, and then click **Next**.

If you want to change the printer name, enter the printer name in the **Printer name** box, and then click **Next**.

9 When the driver installation is completed, click **Print a test page** to verify installation.

If you want to use this printer as the default printer, select the **Set as the default printer** check box.

10 Click **Finish**.

Setting Up for Web Services on Devices (WSD)

Adding Roles of Printer Services (Windows Server® Operating Systems Only)

When you use Windows Server® operating system, you need to add the roles of print services to the operating system.

For Windows Server® 2008 R2:

1 Click **Start** → **Administrative Tools** → **Server Manager**.

2 Select **Add Roles** from the **Action** menu.

3 Select the **Print and Document Services** check box on the **Server Roles** window in the **Add Roles Wizard**, and then click **Next** → **Next**.

4 Select the **Print Server** check box, and then click **Next** → **Install**.

Installing a Print Driver Using the Add Printer Wizard

The following procedure uses Windows® 7/Windows® 10 as an example.

1 Click **Start** → **Devices and Printers**.

For Windows® 10: Right-click the Start button, and then click **Control Panel** → **Hardware and Sound** → **Devices and Printers** → **Add a printer**.

For Windows® 10: Proceed to step 3.

2 Select **Add a network, wireless or Bluetooth printer**.

NOTE:

- Wireless network is available on Dell H625cdw and Dell H825cdw.

3 In the list of available printers, select the one you want to use, and then click **Next**.

NOTE:

- In the list of available printers, the Web Services on Devices (WSD) printer is displayed in the form of **http://*IP address*/ws/**.
- If no Web Services on Devices (WSD) printer is displayed in the list, enter the printer's IP address to create a Web Services on Devices (WSD) printer. To enter the printer's IP address, perform the following procedure.
  For Windows Server® 2008 R2, to create a Web Services on Devices (WSD) printer, you must be a member of Administrators group.
  1 Click **The printer that I want isn't listed**.
  2 Select **Add a printer using a TCP/IP address or hostname**, and then click **Next**.
  3 Select **Web Services Device** from **Device type**.
  4 Enter the printer's IP address in the **Hostname or IP address** text box, and then click **Next**.
- Before installing the driver using the Add Printer wizard on Windows Server® 2008 R2 or Windows® 7, perform one of the following:
  - Establish the Internet connection so that Windows® Update can scan your computer.
  - Add the print driver to your computer.

4 If prompted, install the print driver on your computer. If you are prompted for an administrator password or confirmation, enter the password or provide confirmation.

5 Complete the additional steps in the wizard, and then click **Finish**.

6 Print a test page to verify print installation.

a Click **Start** → **Devices and Printers**.

For Windows® 10: Right-click the Start button, and then click **Control Panel** → **Hardware and Sound** → **Devices and Printers**.

b Right-click the icon for the printer you just created, and then click **Printer properties**.

c On the **General** tab, click **Print Test Page**.

When a test page is printed successfully, installation is complete.

Installing the Software for Macintosh Computers

Installing the Software and Print Drivers

1 Insert the *Software and Documentation* disc on the Macintosh computer, and then click the CD icon.

2 Double-click your printer icon, and then click **Continue**.

3 When the popup dialog box prompts you to confirm the program included in the installation package, click **Continue**.

4 Click **Continue** on the **Important Information** screen.

5 Select a language for the **Software License Agreement** screen.

6 After reading **Software License Agreement**, click **Continue**.

7 If you agree to the terms of **Software License Agreement**, click **Agree** to continue the installation process.

8 Specify the installation location, and then click **Continue**.

9 Click **Install**.

If you want to select a custom installation, click **Customize** and select items that you want to install.

10 Enter the administrator's name and password, and then click **Install Software** → **Continue Installation**.

11 Click **Log Out** or **Close**.

Adding a Printer Using USB Connection

The following procedure uses OS X 10.10 as an example.

1 Turn on the printer.

2 Connect the USB cable to the printer and the Macintosh computer.

Adding a Printer Using IP Printing

The following procedure uses OS X 10.10 as an example.

1 Turn on the printer.

2 Make sure that Macintosh computer and the printer are connected.

If you use wired connection, connect the printer to the network via an Ethernet cable.

If you use wireless connection, make sure that the wireless connection is configured properly on your Macintosh computer and the printer.

NOTE:

- Wireless network is available on Dell H625cdw and Dell H825cdw.

3 Open the **System Preferences**, and then click **Printers & Scanners**.

4 Click the Plus (+) sign, select **Add Printer or Scanner**, and then click **IP**.

5 Select **Line Printer Daemon - LPD** for **Protocol**.

6 Enter the IP address for the printer in the **Address** area.

7 Select **Dell Color MFP H625cdw**, **Dell Color MFP H825cdw**, or **Dell Color MFP S2825cdn** for **Use**.

NOTE:

- When printing is set up using IP printing feature, the queue name is displayed as blank. You do not need to specify it.

8 Click **Add**.

9 Specify the options that have been installed on the printer, and then click **Continue**.

10 Make sure that the printer is displayed in the **Printers & Scanners** dialog box.

Adding a Printer Using Bonjour

The following procedure uses OS X 10.10 as an example.

1 Turn on the printer.

2 Make sure that Macintosh computer and the printer are connected.

If you use wired connection, connect the printer to the network via an Ethernet cable.

If you use wireless connection, make sure that the wireless connection is configured properly on your Macintosh computer and the printer.

NOTE:

- Wireless network is available on Dell H625cdw and Dell H825cdw.

3 Open the **System Preferences**, and then click **Printers & Scanners**.

4 Click the Plus (+) sign, select **Add Printer or Scanner**, and then click **Default**.

5 Select the printer connected via Bonjour from the **Printer Name** list.

6 **Name** and **Use** are automatically entered.

NOTE:

- If **AirPrint Printer** is selected for **Print Using** (or **Use**), select **Dell Color MFP H625cdw**, **Dell Color MFP H825cdw**, or **Dell Color MFP S2825cdn** manually.

7 Click **Add**.

8 Specify the options that have been installed on the printer, and then click **Continue**.

9 Make sure that the printer is displayed in the **Printers & Scanners** dialog box.

Configuring With Optional Accessories

On the driver, specify the optional accessories that have been installed on the printer to enable features associated with those accessories.

1. Open the **System Preferences**, and then click **Printers & Scanners**.
2. Select the printer in the **Printers** list, and then click **Options & Supplies**.
3. Select **Options**, and select the options that have been installed on the printer, and then click **OK**.

Connecting Your Printer to Mobile Devices

You can connect the printer directly to your mobile devices, such as computers, smart phones, and tablets, and then you can print or scan documents, photos, web pages, or e-mail quickly and easily.

Overview

The following shows the compatibility between the mobile printing services and operating systems.

	Windows®	Macintosh	iOS	Android™
Wi-Fi Direct®	✓			✓
Dell Document Hub			✓	✓
Tap to Print/Scan				✓
AirPrint™		✓	✓	
Google Cloud Print™	✓			✓
Mopria™ Print				✓

(✓: compatible, Blank: not compatible)

Wi-Fi Direct

Wi-Fi Direct allows your mobile devices to connect to the printer directly via a Wi-Fi network. With Wi-Fi Direct, you can print documents, photos, or e-mail on your mobile devices directly without an access point or a wireless router.

NOTE:

- Wi-Fi Direct is available on Dell H625cdw and Dell H825cdw.
- The maximum number of mobile devices that can be connected via the Wi-Fi Direct network is 3.
- You cannot connect your mobile device to the Internet via the printer's Wi-Fi Direct network.
- Depending on the mobile device, the channel used to connect the mobile device to the printer via Wi-Fi Direct may differ from the channel used by the printer to connect to a network via Wi-Fi infrastructure mode. In such a case, simultaneous connection with Wi-Fi Direct and Wi-Fi infrastructure mode may not work properly.
- The printer connected with Wi-Fi Direct supports the following protocols; LPD, Port9100, WSD*, Bonjour (mDNS), SNMPv1/v2c, Dell Printer Configuration Web Tool.
  * WSD stands for Web Services on Devices.

Setting Up Wi-Fi Direct

To use Wi-Fi Direct, you need to first set up the Wi-Fi Direct settings from the operator panel of the printer. To connect the mobile device to the printer via Wi-Fi Direct, select the SSID of the printer from the list of wireless networks on the mobile device and enter the passphrase necessary for connection.

Setting Up the Printer

NOTE:

- You can set the same setting using the Dell Printer Configuration Web Tool. See "Dell™ Printer Configuration Web Tool."

1. Press the (**Wi-Fi**) button.

   If `Panel Lock Control` is set to `Enable`, enter the password. See "Panel Lock."

2 Tap `Wi-Fi Direct`.

3 In the `Wi-Fi Direct` menu, tap `Wi-Fi Direct` → `Enable` → `OK`.

If a popup message about the mobile devices is displayed, tap `Close`.

4 Tap `Group Role` → `Group Owner` → `OK` → `Paired Device`.

5 Make sure that no device is connected with the Wi-Fi Direct connection.

NOTE:

- When other mobile device is connected, the device name and `Connected` are displayed on `Paired Device`, and you cannot use the Wi-Fi Direct connection. Disconnect the other mobile device from the Wi-Fi Direct network. See "Disconnecting Wi-Fi Direct Network."

6 Turn off the printer, and then turn it on again.

7 Repeat steps 1 and 2 after the printer is restarted, and then tap `Group Owner`.

8 Tap `SSID` and `Passphrase` to check what the SSID and passphrase are.

NOTE:

- To check the printer's SSID and passphrase, you can also print the list by tapping `Print Passphrase` under the `Passphrase` menu.

Connecting the Mobile Device

The following procedure uses Windows® 7, Windows® 10, OS X 10.10, iOS, and Android as examples.

Connect the mobile device to the Wi-Fi Direct network.

For Windows® 7:

1 Click the network icon on the taskbar.

2 Click the printer's SSID → **Connect**.

3 Enter the passphrase, and then click **OK**.

4 Click **Cancel**, and then exit the **Set Network Location** window.

For Windows® 10:

1 Click the Start button, and then click **Settings**.

2 Click the Wi-Fi icon.

3 Click the printer's SSID → **Connect**.

4 Enter the passphrase, and then click **Next**.

For OS X 10.10:

1 Click the network icon on the Menu Bar.

2 Click the printer's SSID.

3 Enter the passphrase, and then click **Join**.

For iOS:

1 Tap **Settings** → **Wi-Fi**.

2 Tap the printer's SSID.

3 Enter the passphrase, and then tap **Join**.

For Android:

The procedure varies depending on your mobile device you are using. Refer to the manual supplied with your mobile device.

Printing via Wi-Fi Direct

Installing the Print Driver

Before printing, you are required to install the print driver accordingly.

For Windows® 7/Windows® 10:

You need to install the print driver on the mobile device. See "Installing the Software for Windows® Computers."

For OS X 10.10:

You need to install the print driver on the mobile device. See "Installing the Software for Macintosh Computers."

For iOS:

You need to install the printing program from App Store, and then the printer is ready for use. For details, see "Dell Document Hub."

For Android:

You need to install the printing program from Google Play™, and then the printer is ready for use. For details, see "Dell Document Hub."

The printing procedure varies depending on your mobile device you are using. Refer to the manual supplied with your mobile device to print as you normally do from the mobile device.

Disconnecting Wi-Fi Direct Network

1 Press the (**Wi-Fi**) button.

2 Tap `Wi-Fi Direct` → `Paired Device`.

NOTE:

- The `Paired Device` menu is displayed only when the printer is connected via Wi-Fi Direct.

3 Tap the mobile device name to disconnect, or select `Disconnect All`.

4 Tap `Disconnect now` or `Disconnect and Reset Passphrase` → `Yes`.

You can also disconnect the mobile device from the following steps:

1 Press the (**Information**) button.

2 Tap the `Tools` tab → `Admin Settings` → `Network` → `Wi-Fi Direct` → `Paired Device`.

If `Panel Lock Control` is set to `Enable`, enter the password. See "Panel Lock."

3 Tap `Disconnect All`.

4 Tap `Disconnect now` or `Disconnect and Reset Passphrase`→ `Yes`.

Resetting the Passphrase

1 Press the (**Wi-Fi**) button.
If `Panel Lock Control` is set to `Enable`, enter the password. See "Panel Lock."

2 Tap `Wi-Fi Direct`.

3 Tap ▼ until `Passphrase` appears, and then tap `Passphrase`.

4 Tap `Reset Passphrase` → `Yes`.

The Wi-Fi Direct is disconnected and the passphrase is reset.

Resetting the PIN

1 Press the (**Wi-Fi**) button.
If `Panel Lock Control` is set to `Enable`, enter the password. See "Panel Lock."

2 Tap `Wi-Fi Direct`.

3 Tap ▼ until `WPS Setup` appears, and then tap `WPS Setup`.

4 Tap `PIN Code` → `Reset Code` → `Yes`.

The Wi-Fi Direct is disconnected and the PIN is reset.

Dell Document Hub

The Dell Document Hub app allows you to scan to and print from a variety of common cloud storage services. Easy to use and navigate, this free app enables direct printing of photos, documents, web content and more, to supported Dell printers on a Wi-Fi, Wi-Fi Direct, or Ethernet network. You can also view the printer status and configuration of print and scan settings. For details, click **Learn more** at **www.dell.com/dochub**.

Android

Download the Dell Document Hub app for free from Google Play.
Scan the QR Code® for quick access to the relevant application store.

iOS

Download the Dell Document Hub app for free from App Store.
Scan the QR Code for quick access to the relevant application store.

Tap To Print/Scan

Tap To Print allows you to add the printer to a mobile device such as a tablet or a notebook computer, simply by tapping the mobile device onto the printer. Once the printer is added to the mobile device, you can start printing or scanning from the mobile device.

NOTE:

- To utilize the Tap To Print feature, make sure the followings:
  - The mobile device should be NFC-enabled and running the Windows® 8.1 or Windows® 10 operating system.
  - The printer should be connected to a network. If the printer is connected with the computer only with the USB cable, the Tap To Print feature is not available.
- The Tap To Print feature is available on Dell H625cdw and Dell H825cdw.

Preparations

- Make sure that the Tap To Print feature is enabled.

  The Tap To Print feature is enabled as default on the printer.

  To enable the Tap To Print feature from the operator panel, perform the following.

  NOTE:

  - You can set the same setting using the Dell™ Printer Configuration Web Tool. See "Dell™ Printer Configuration Web Tool."

  1. Press the ⓘ (**Information**) button.
  2. Tap the `Tools` tab → `Admin Settings` → `System Settings`.
  3. Tap ▼ until `NFC - Tap to Print` appears, and then tap `NFC - Tap to Print`.
  4. Tap `Enable` → `OK`.
  5. Turn off the printer, and then turn it on again to apply the settings.
- Make sure that both the printer and the computer are on the same network.
- It is recommended that the computer is connected to the Internet so that the latest driver could be installed on the computer.

Adding the Printer to the Mobile Device

While the printer is connected to the same subnet of the network with the mobile device, you can add the printer to the mobile device by tapping the mobile device onto the printer. The printer is added as a Web Services on Devices (WSD) printer.

The following procedure uses Windows® 8.1/Windows® 10 as an example.

NOTE:

- Make sure that the NFC function is activated on the mobile device.
- This is available on Dell H625cdw and Dell H825cdw.

1 Locate the NFC reader of the mobile device.

2 Tap the mobile device onto the ((NFC)) (**NFC**) reader of the printer.

For the location of ((NFC)) (**NFC**) reader, see "Operator Panel."

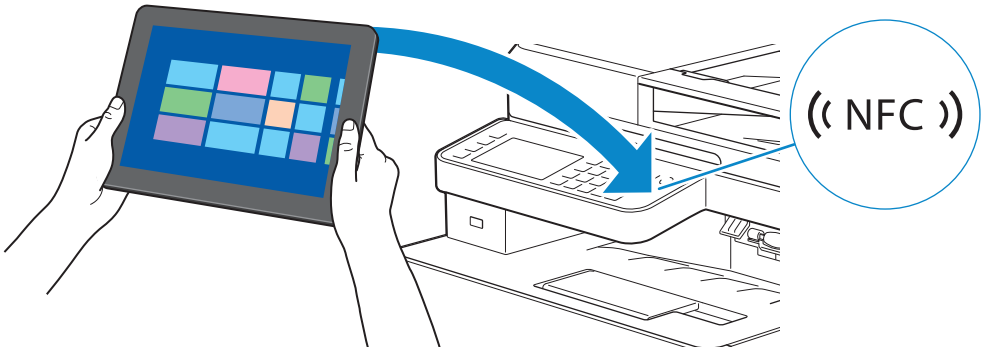

The printer beeps when it detects the mobile device, and the following message appears in the top right corner of the mobile device.

The following procedure uses Dell H825cdw as an example.

```
Add a device?
Tap to set up your Dell-H825cdw-xxxxxx.
```

3 Tap the message window to set up the printer on the mobile device.

The printer icon appears on the mobile device.

NOTE:

- The time required until the driver is installed depending on the network traffic.
- To check the printer icon, right-click the **Start** button, and then click **Control Panel** → **Hardware and Sound** → **Devices and Printers**.
- If a printer icon already exists on the mobile device, the message appears in the top right corner of the mobile device screen confirming whether to connect to the printer.
  In this case, tap the message window to connect the mobile device to the printer.

Printing or Scanning

Once the printer is added and connected to the mobile device, you can start printing or scanning. See "Sending a Job to Print" or "Scanning to a Computer With a Network Connection."

AirPrint

AirPrint allows you to print through a network with the device running iOS or OS X. Be sure to install the latest version of iOS for iOS device. For OS X, be sure to update OS X and the apps you have purchased from the App Store using the Software Update.

Setting Up AirPrint on Your Printer

1 Make sure that the printer is connected to the network.

2 Start the Dell Printer Configuration Web Tool.

See "Starting the Dell Printer Configuration Web Tool."

3 Click **Print Server Settings** → the **Print Server Settings** tab → **AirPrint**.

4 Select the **Enable AirPrint** check box.

5 Click **Apply New Settings** → **Restart Printer**.

Printing via AirPrint

The following procedure uses the iPhone running iOS 8.1 as an example.

1 Open your e-mail, photo, web page, or document that you want to print.

2 Tap the action icon ⬆.

3 Tap **Print**.

4 Select the printer and set printer options.

5 Tap **Print**.

Google Cloud Print

By registering the printer to your Google™ account, Google Cloud Print service allows you to print from various devices connected to the Internet. You can print documents, photos or e-mails using the Google Chrome™ browser or applications such as Google Drive™ on your mobile device. For details about Google Cloud Print, visit the Google web site.

Preparing to Use the Printer With Google Cloud Print

To use Google Cloud Print, you need to prepare the following in advance:

- Connect the printer to a network that has access to the Internet.

  NOTE:
  - Google Cloud Print supports only IPv4 connection.
  - If the printer is connected to a network via a proxy server, you need to specify the settings in **Proxy Server** from the Dell Printer Configuration Web Tool. See "Proxy Server."

- Acquire a Google account and a Gmail™ address.
- Enable Google Cloud Print on the operator panel.

  NOTE:
  - You can set the same setting using the Dell™ Printer Configuration Web Tool. See "Dell™ Printer Configuration Web Tool."

  1 Press the ⓘ (**Information**) button.

  2 Tap the `Tools` tab → `Admin Settings` → `Network` → `Protocols`.
  If `Panel Lock Control` is set to `Enable`, enter the password. See "Panel Lock."

  3 Tap ▼ until `Google Cloud Print` appears, and then tap `Google Cloud Print`.

  4 Tap `Enable` → `OK`.

  5 Turn off the printer, and then turn it on again to apply the settings.

Selecting the Version of the Google Cloud Print Service

Select the version of the Google Cloud Print service from either version 1.1 or version

2.0.

Google Cloud Print version 1.1 sends the print data to the printer via Internet. For this version, the printer needs to be connected to the Internet.

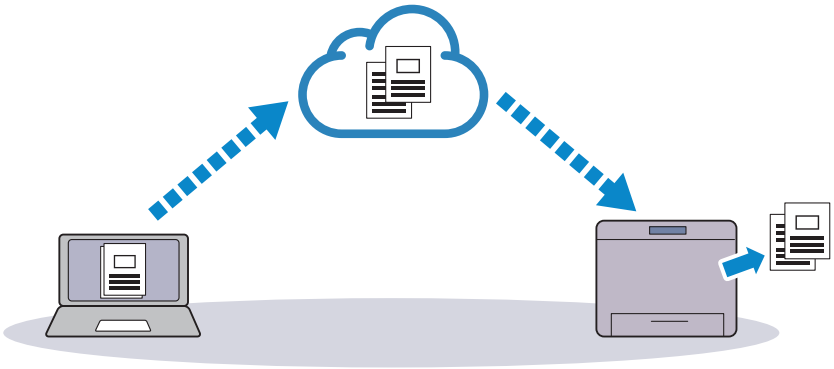

Google Cloud Print version 2.0 sends the print data to the printer either via Internet or via local network. This version is recommended for the environment where the Internet connection cannot be used.

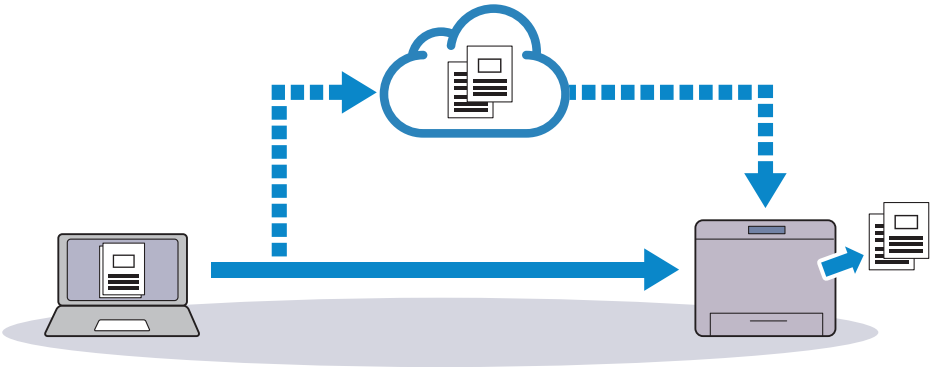

NOTE:

- Available options for printing may vary according to your device or the version of the Google Cloud Print service.
- You cannot simultaneously use both version 1.1 and version 2.0 of the Google Cloud Print service on a printer.

Registering the Printer to Your Google Account

For Google Cloud Print Version 1.1

1 Start the Dell Printer Configuration Web Tool.

See "Starting the Dell Printer Configuration Web Tool."

2 Click **Print Server Settings** → the **Print Server Settings** tab → **Google Cloud Print** → **Register This Device to Google Cloud Print**.

A sheet with a URL for the Google Cloud Print printer registration web site is printed.

3 From the web browser of your computer, visit the Google web site and sign in with your Google account.

You can visit the Google Cloud Print registration web site by entering the URL on the printout into your web browser or by scanning the QR code with your mobile device.

4 On the Google Cloud Print registration web site, click **Finish printer registration**.

5 Click **Manage your printers**.

The printer is listed in the **Printers** list and ready for use with the Google Cloud Print service.

For Google Cloud Print Version 2.0

1 Open the Google Chrome browser. When you are using the Google Chromebook, start and log in to the Chromebook.

2 Click ≡ in the top right corner, and then select **Settings**.

3 Click **Show advanced settings** in the bottom of the page.

4 Click **Google Cloud Print** → **Manage**.

NOTE:

- If a message is displayed under **New Devices** to sign in to Chrome, click **sign in** and sign in to Chrome.

5 Click **Register** for the printer you want to register.

NOTE:

- If **Bonjour (mDNS)** is disabled, the newly added printer is not displayed in **New devices**. In this case, start the Dell Printer Configuration Web Tool. Click **Print Server Settings** → the **Print Server Settings** tab → **Port Settings**. Select the **Bonjour (mDNS)** check box.

6 When the window to confirm the registration appears, click **Register**.

7 Follow the on-screen instruction on the printer.

8 When the printer name appears in the **My devices** list, the registration is completed.

NOTE:

- It may take about 5 minutes or more until the printer name appears in the **My devices** list.

Sharing the Printer With the Google Cloud Print Service

You can share the printer registered for the Google Cloud Print service with other users.

1 Open the Google Chrome browser.

When you are using the Google Chromebook, start and log in to the Chromebook.

2 Click ≡ in the top right corner, and then select **Settings**.

3 Click **Show advanced settings** in the bottom of the page.

4 Click **Google Cloud Print** → **Manage**.

NOTE:

- If a message is displayed to sign in to Chrome, click **sign in** and sign in to Chrome.

5 Click **Manage** for the printer you want to share.

6 Click **Google Cloud Print** → **Share**.

7 In the window to specify the printer sharing, enter the Google accounts of the users that you want to invite to share the printer, and click **Share**.

NOTE:

- When the invited users log in to the Google Cloud Print web page, a message appears to show that the printer owner made the sharing settings. Accept the sharing invitation.

Canceling the Registration to Google Cloud Print

1 Start the Dell Printer Configuration Web Tool.

See "Starting the Dell Printer Configuration Web Tool."

2 Click **Print Server Settings** → **Cancel Registration**.

3 Make sure that **Register This Device to Google Cloud Print** appears.

Printing via Google Cloud Print

The printing procedure varies depending on the application or the device you are using. You can see the application list that supports Google Cloud Print service on the Google web site.

Printing From an Application on a Mobile Device

The following procedure uses the Google Drive application on an Android mobile device as an example.

1 Install the Google Drive application on your mobile device.

NOTE:

- You can download the application from Google Play.

2 Start the Google Drive application from your mobile device.

3 Tap next to the file name of the file you want to print.

4 Tap **Print**.

If **Print** is not displayed, tap , and then tap **Print**.

5 Select a google cloud printer form the list.

6 Specify printer options, and then tap .

Printing From Google Chrome

NOTE:

- You are required to register the Google Cloud Print Version 2.0.

The following procedure uses the Google Chrome browser on a Windows® PC as an example.

1 Open the Google Chrome browser.

2 Open the web page or e-mail that you want to print.

3 Click or (varies depending on the version of the Google Chrome browser) in the top right corner, and then click **Print**.

4 In the **Destination** area, click **Change**.

5 In the **Google Cloud Print** area, select the printer.

6 Click **Print**.

Printing From Google Chromebook

NOTE:

- You are required to register the Google Cloud Print Version 2.0.

1 Open the web page or e-mail that you want to print.

2 Click ≡ in the top right corner and then click **Print**.

3 Confirm that your printer is specified in the **Destination area**. If not, click **Change** and select your printer.

4 Click **Print**.

Mopria Print Service

Mopria-certified mobile devices can connect and print to certify printer. Either connect your mobile devices to the same network as the printer or make a direct connection with Wi-Fi Direct.

Works with Mopria-certified smartphones and tablets or Android 4.4 devices with the Mopria Print Service download from Google Play.

https://play.google.com/store/apps/

http://www.mopria.org/

NOTE:

- Your mobile device and printer need to be connected to the same network.
- Mopria Print Service may be preloaded into your smartphone or tablet. If your mobile device does not have the Mopria Print Service, you can easily download it free of charge from Google Play.
- Make sure that **Mopria** is set to **Enable** in advance using the Dell™ Printer Configuration Web Tool. See "Mopria."

Setting Up Mopria Print Service on Your Printer

1 Make sure that the printer is connected to the network.

2 Start the Dell Printer Configuration Web Tool.

See "Starting the Dell Printer Configuration Web Tool."

3 Click **Print Server Settings** → the **Print Server Settings** tab → **Mopria**.

4 Click **Enable**.

The printer is ready for Mopria Print Service.

Printing via Mopria Print Service

1 Open your e-mail, photo, web page, or document that you want to print.

2 Tap the menu, and then select **Print**.

3 Tap **All printers** in the menu.

4 Select the printer, and then set printer options.

5 Tap **Print**.

Installing Print Drivers on Linux Computers Using Common UNIX Printing System (CUPS)

This section provides information for installing or setting up the print driver with CUPS on Red Hat® Enterprise Linux® 6 Desktop, SUSE® Linux Enterprise Desktop 11, or Ubuntu 12.04 LTS.

The following procedure uses Dell H825cdw as an example.

Operation on Red Hat Enterprise Linux 6 Desktop

Setup Overview

Red Hat Enterprise Linux 6 Desktop:

1. Install the print driver.
2. Set up the print queue.
3. Set up the default queue.
4. Specify the printing options.

Installing the Print Driver

1. Select **Applications** → **System Tools** → **Terminal**.
2. Enter the following command in the terminal window.

```
su
[administrator password]
rpm -ivh [file path]
/Dell-Color-MFP-S2825cdn-H825cdw-x.x-x.rpm
```

Setting Up the Print Queue

To perform printing, you must set up the print queue on your workstation.

1. Open the URL **http://localhost:631** using a web browser.
2. Click **Administration** → **Add Printer**.
3. Enter root as the user name, enter the administrator password, and then click **OK**.

   For network connections:

   a. Select **LPD/LPR Host or Printer** from the **Other Network Printers** menu, and then click **Continue**.
   b. Enter the IP address of the printer in **Connection**, and then click **Continue**.

      Format: *lpd:// xxx.xxx.xxx.xxx* (the IP address of the printer)

   For USB connections:

   a. Select **Dell Color MFP H825cdw** from the **Local Printers** menu, and then click **Continue**.

4 Enter the name of the printer in the **Name** box in the **Add Printer** window, and then click **Continue**.

   You can optionally specify the location and description of the printer for further information.

5 Select **Dell Color MFP H825cdw vxxxx.PS (en)** from the **Model** menu, and then click **Add Printer**.

Printing From the Program

When you have finished setting up the queue, you can print from the programs. To print from the program, specify the queue in the print dialog box.

However, on programs such as Mozilla, it may only be possible to print from the default queue.
In these cases, set the queue that you want to print to as the default queue before you start printing. See "Setting Up the Default Queue."

Setting Up the Default Queue

1 Select **Applications** → **System Tools** → **Terminal**.

2 Enter the following command in the terminal window.

```
su
[administrator password]
lpadmin -d [queue name]
```

Specifying the Printing Options

You can specify the printing options such as color mode.

1 Open the URL **http://localhost:631** using a web browser.

2 Click **Administration** → **Manage Printers**.

3 Click the queue name for which you want to specify the printing options.

4 Select **Set Default Options** from the **Administration** menu.

5 Click the desired setting item to specify the required settings, and then click **Set Default Options**.

Uninstalling the Print Driver

1 Select **Applications** → **System Tools** → **Terminal**.

2 Enter the following command in the terminal window to delete the print queue.

```
su
[administrator password]
/usr/sbin/lpadmin -x [queue name]
```

3 Repeat the command above for all queues for the same model.

4 Enter the following command in the terminal window.

```
su
[administrator password]
rpm -e Dell-Color-MFP-S2825cdn-H825cdw
```

Operation on SUSE Linux Enterprise Desktop 11

Setup Overview

SUSE Linux Enterprise Desktop 11:

1 Install the print driver.

2 Set up the print queue.

3 Set up the default queue.

4 Specify the printing options.

Installing the Print Driver

1 Select **Computer** → **More Applications...**, and then select **GNOME Terminal** on the Application Browser.

2 Enter the following command in the terminal window.

```
su
[administrator password]
rpm -ivh [file path] /
Dell-Color-MFP-S2825cdn-H825cdw-x.x-x.rpm
```

Setting Up the Print Queue

To perform printing, you must set up the print queue on your workstation.

1 Select **Computer** → **More Applications...**, and then select **YaST** on the Application Browser.

2 Enter the administrator password, and then click **Continue**.

3 Select **Hardware** → **Printer**.

For network connections:

a Click **Add**.

b Click **Connection Wizard**.

c Select **Line Printer Daemon (LPD) Protocol** from **Access Network Printer or Printserver Box via**.

d Enter the IP address of the printer in **IP Address or Host Name:**.

e Select **Dell** in the **Select the printer manufacturer:** drop-down list box.

f Click **OK**.

g Select your printer from the **Assign Driver** list.

NOTE:

- You can specify the printer name in **Set Name:**.

h Check the settings, and then click **OK**.

For USB connections:

a Click **Add**.

b Select your printer from the **Assign Driver** list.

NOTE:

- You can specify the printer name in **Set Name:**.

c Check the settings, and then click **OK**.

Printing From the Program

When you have finished setting up the queue, you can print from the programs. To print from the program, specify the queue in the print dialog box.

However, sometimes you can print only from the default queue depending on the program such as Mozilla. In these cases, before you start printing, set queue you want to print to as the default queue. See "Setting Up the Default Queue."

Setting Up the Default Queue

You can set the default queue when you add the printer.

1 Select **Computer** → **More Applications...**, and then select **YaST** on the Application Browser.

2 Enter the administrator password, and then click **Continue**.

3 Select **Hardware** → **Printer**.

4 Click **Edit**.

5 Check that the printer you want to set is selected in the **Connection** list.

6 Select the **Default Printer** check box.

7 Check the settings, and then click **OK**.

Specifying the Printing Options

You can specify the printing options such as color mode.

1 Open a web browser.

2 Enter **http://localhost:631/admin** in **Location**, and then press <Enter> on the keyboard.

3 Click **Manage Printers**.

4 Click **Set Printer Options** of the printer for which you want to specify the printing options.

5 Specify the required settings, and then click **Set Printer Options**.

6 Enter root as the user name, enter the administrator password, and then click **OK**.

NOTE:

- Set the password for authority as the printer administrator before setting the printer queue. If you have not set it, proceed to "Setting the Password for Authority as the Printer Administrator."

7 Execute printing from the program.

Setting the Password for Authority as the Printer Administrator

You must set the password for authority as the printer administrator to do operations as the printer administrator.

1 Select **Computer** → **More Applications...** and select **GNOME Terminal** on the Application Browser.

2 Enter the following command in the terminal window.

```
su
[administrator password]
lppasswd -g sys -a root
```

3 Enter the password for authority as the printer administrator.

4 Re-enter the password.

Uninstalling the Print Driver

1 Select **Computer** → **More Applications...** and select **GNOME Terminal** on the Application Browser.

2 Enter the following command in the terminal window to delete the print queue.

```
su
[administrator password]
/usr/sbin/lpadmin -x [queue name]
```

3 Repeat the command above for all queues for the printer.

4 Enter the following command in the terminal window.

```
su
[administrator password]
rpm -e Dell-Color-MFP-S2825cdn-H825cdw
```

Operation on Ubuntu 12.04 LTS

Setup Overview

1 Install the print driver.

2 Set up the print queue.

3 Set up the default queue.

4 Specify the printing options.

Installing the Print Driver

1 Click **Dash Home**, and then enter the terminal in the **Search** text box.

2 Click **Applications** → **Terminal**.

3 Enter the following command in the terminal window.
For the 32-bit architecture:

```
sudo lpadmin -d (Enter the queue name)
(Type the administrator password)
```

For the 64-bit architecture:

```
sudo dpkg -i (Type the file path)/
dell-color-mfp-s2825cdn-h825cdw-*.*-*_amd6
4.deb
(Type the administrator password)
```

Setting Up the Print Queue

To execute printing, you must set up the print queue on your workstation.

1 Open the URL **http://localhost:631** using a web browser.

2 Click **Administration** → **Add Printer**.

3 Enter the user name and the administrator password, and then click **OK**.

4 Select either of the following according to the type of your printer connection.
For network connections:

a Select **LPD/LPR Host or Printer** from the **Other Network Printers** menu, and then click Continue.

b Enter the IP address of the printer in **Connection**, and then click **Continue**.

Format: lpd://xxx.xxx.xxx.xxx (the IP address of the printer)

For USB connections:

a Select **Dell Color MFP H825cdw** from the **Local Printers** menu, and then click **Continue**.

5 Select the **Add Printer** window, and then enter the name of the printer in the **Name** box.

6 Click **Continue**.

You can optionally specify the location and description of the printer for further information.

If you want to share the printer, select the **Share This Printer** check box.

7 Select **Dell** from the **Make** menu, and then click **Continue**.

8 Select **Dell Color MFP H825cdw vxxxx.PS** from the **Model** menu, and then click **Add Printer**.

Printing From Applications

When you have finished setting up the print queue, you can print jobs from the applications.

Start the print job from the application, and then specify the queue in the print dialog box.

However, on programs such as Mozilla, it may only be possible to print from the default queue.

In these cases, set the queue that you want to print to as the default queue before you start printing.

For information on specifying the default queue, see "Setting Up the Default Queue."

Setting Up the Default Queue

1 Click **Dash Home**, and then enter terminal in the **Search** text box.

2 Click **Terminal** in the **Applications** category of the search results.

3 Enter the following command in the terminal window.

```
sudo lpadmin -d (Enter the queue name)
(Type the administrator password)
```

Specifying the Printing Options

You can specify the printing options such as 2-sided printing.

1 Open the URL **http://localhost:631** using a web browser.

2 Click **Administration** → **Manage Printers**.

3 Click the queue name for which you want to specify the printing options.

4 Select **Set Default Options** from the **Administration** menu.

5 Click the desired setting item, and then specify the required settings.

6 Click **Set Default Options**.

Uninstalling the Print Driver

1 Click **Dash Home**, and then enter terminal in the **Search** text box.

2 Click **Terminal** in the **Applications** category of the search results.

3 Enter the following command in the terminal window to delete the print queue.

```
sudo /usr/sbin/lpadmin -x (Type the print queue name)
(Type the administrator password)
```

4 Repeat the command above for all queues for the same model.

5 Enter the following command in the terminal window.

```
sudo dpkg -r Dell-Color-MFP-S2825cdn-H825cdw
(Type the administrator password)
```

Setting the IP Address

Assigning an IP Address

You can select the IP mode from Dual Stack, IPv4, and IPv6. If your network supports both IPv4 and IPv6, select Dual Stack.

Select the IP mode of your environment, and then set IP address, subnet mask (for IPv4 only), and gateway address.

NOTE:

- Assigning an IP address that is already in use can cause network performance issues.
- IP addresses should be assigned by advanced users or system administrators.
- When you assign an IP address manually in IPv6 mode, use the Dell™ Printer Configuration Web Tool. To display the Dell Printer Configuration Web Tool, use the link-local address. To check the link-local address, print a system settings report and check the **Link-Local Address** under **Network (Wired)** or **Network (Wireless)**.
  See "Report / List."
- Wireless network is available on Dell H625cdw and Dell H825cdw.

When Using the Dell Printer Easy Install (Windows® Only)

1 Insert the *Software and Documentation* disc into your computer.

2 Click **Main Menu**.

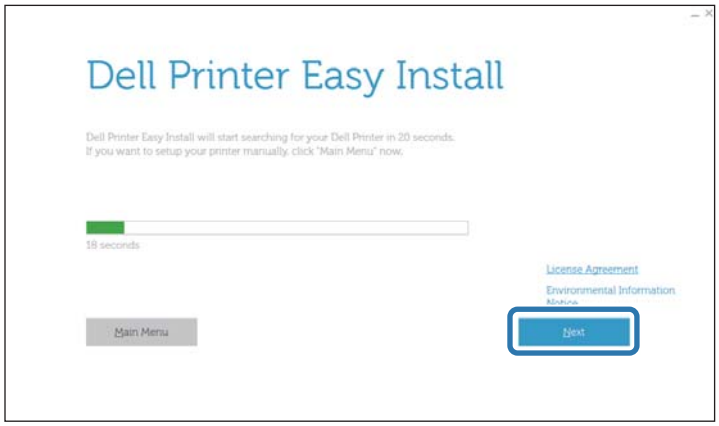

3 Click **Change**.

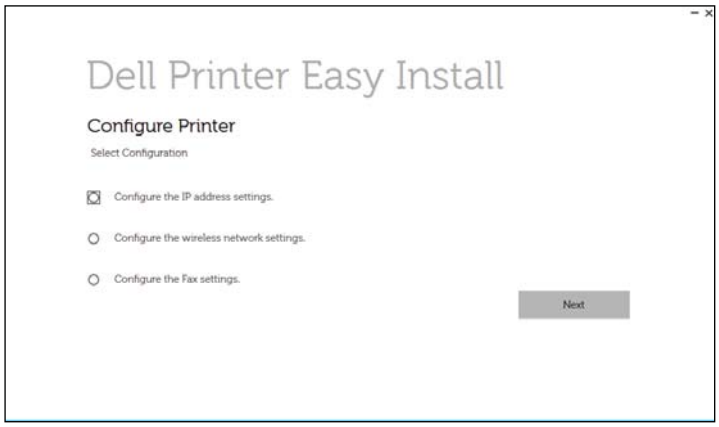

4 Click **Configure the IP address settings** → **Next**.

5 Follow the on-screen instructions until the **Configure Printer** screen appears.

6 Click **Advanced**.

7 Specify the IP address settings according to your network environment.

8 Click **Next**, and then follow the on-screen instructions.

When Using the Operator Panel

1 Press the ⓘ (**Information**) button.

2 Tap the `Tools` tab → `Admin Settings` → `Network`.

If `Panel Lock Control` is set to `Enable`, enter the password. See "Panel Lock."

3 Perform either of the following:

If the printer is connected to a network with the Ethernet cable:

Tap `Ethernet`.

For Dell H625cdw and Dell H825cdw:

If the printer is connected to a wireless network:

Tap `Wi-Fi`.

4 Tap `IP Mode` → `IPv4 Mode` → `OK`.

5 Tap ▼ until `TCP / IP` appears, and then tap `TCP / IP` → `Get IP Address`.

6 Select how the IP address is assigned.

- To set the IP address automatically, select `AutoIP`, `DHCP`, `BOOTP`, `RARP`, or `Panel`, and then proceed to step 7.
- To set the IP address manually, select `Panel`, and then perform the following:

  a Tap `IP Address`.

  The cursor is located at the first octet of the IP address.

  b Use the number pad to enter the first octet of the IP address, and then tap ▸.

  The cursor moves to the next octet.

  NOTE:

  - You can only enter one octet at a time and must tap ▸ after entering each octet.

  c Enter the rest of the octets, and then tap `OK`.

  d Tap `Subnet Mask`.

  e Use the number pad to enter the subnet mask, and then tap OK.

  f Tap `Gateway Address`.

  g Use the number pad to enter the gateway address, and then tap OK.

7 Turn off the printer, and then turn it on again.

Verifying the IP Settings

You can check the settings by using the operator panel, or printing the system settings report.

Verifying the Settings Using Operator Panel

1 Press the ⓘ (**Information**) button.

2 Tap `About This MFP` → the `Network` tab.

3 Verify the IP address displayed in `IP(v4) Address`.

Verifying the Settings Using System Settings Report

1 Print the system settings report.
See "Report / List."

2 Verify that the correct IP address, subnet mask, and gateway address are listed in the system settings report under **Network (Wired)** or **Network (Wireless)**.
If the IP address shows `0.0.0.0`, an IP address has not been assigned. See "Assigning an IP Address."

NOTE:
- Wireless network is available on Dell H625cdw and Dell H825cdw.

3

Using Your Printer

Using the Operator Panel 84

Understanding the System Menus 90

Understanding the Job Menus 125

Dell™ Printer Configuration Web Tool 139

Print Media Guidelines 187

Loading Print Media 193

Loading Documents 204

Using the Operator Panel

The operator panel consists of a touch panel, a Ready/Error LED, control buttons, a ⏻ (**Power**) button, and a number pad. Use the touch panel and number pad to browse the operator panel menus and enter texts and numbers.

For details about names of parts, see "Operator Panel."

NOTE:

- The screenshots used in this section are those of the Dell H625cdw and Dell H825cdw unless otherwise mentioned.

About the Home Screen

This section describes the fields and buttons on the `Home` screen which is displayed by pressing the (**Home**) button while the user is logged in to the printer.

NOTE:

- To display the `Home` screen, register at the portal screen beforehand and log in to the printer, or log in as a Guest without registration. See "User Authentication."
- Dell Document Hub is available on Dell H625cdw and Dell H825cdw only.
- Wi-Fi Direct Connection Status Icon and Wireless LAN Connection Status Icon are displayed on Dell H625cdw and Dell H825cdw only.

Dell H625cdw/Dell H825cdw

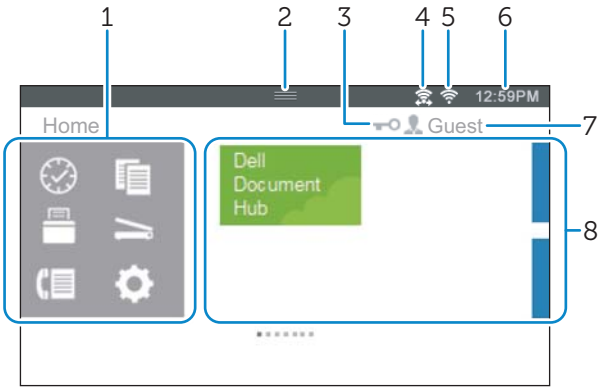

Dell S2825cdn

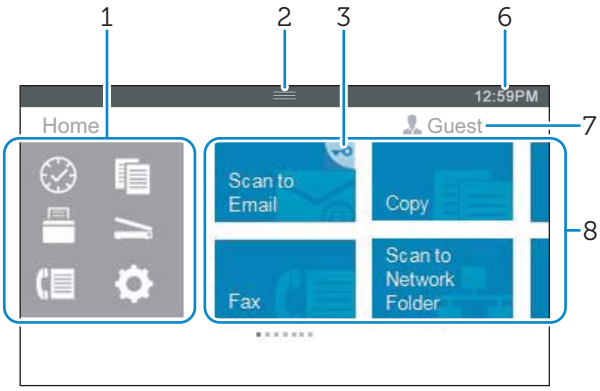

1	Dock Menu	(Recent) Button Displays the tiles of the functions you recently used. Up to 8 tiles can be stored. (Copy) Button Displays the tiles of the copy functions. (Print)Button Displays the tiles of the print functions. (Scan) Button Displays the tiles of the scan functions. (Fax) Button Displays the tile of the fax function. (Tools) Button Displays the `Information` screen.

2	Notification Bar	Displays the status of the printer when (**Handle**) is dragged down. To close the screen, drag (**Handle**) up. You can adjust the screen brightness, check the toner information, monitor the jobs currently in progress, or check warnings in this area. • To adjust the screen brightness, drag the slider in `Screen Brightness`. • To see the `Toner Information`, tap `Supplies`. The information of the toner is displayed with one toner at a time. To see the information of other toners, swipe the screen.
3	Lock Icon	Displays when some functions are limited to access by the Functions Control settings. While the Lock icon is displayed on the upper-right of the tile, you are required to enter the password to enable the function. After the function is enabled, the Lock icon is displayed on the left to the account name, and you can access the password-locked functions without re-entering the password. For details about Functions Control, see "Functions Control"
4	Wi-Fi Direct Connection Status Icon	Displays the `Wi-Fi Direct` connection status. This icon is displayed only when `Wi-Fi Direct` is enabled.
5	Wireless LAN Connection Status Icon	Displays the intensity of wireless signal when the printer is connected to a wireless network.
6	Time/Network Information	Displays the current time or the network information such as IPv4 address or host name.
7	Account Name	Displays the name of the user currently logged in to the printer.
8	Tiles	Displays the tiles of the functions you can select from. When the tile color is pale and disabled, you cannot select the function.

Basic Operations on the Touch Panel

You can operate the touch panel as with a smartphone or a tablet.

Selecting the Item on the Screen

Tap the item.

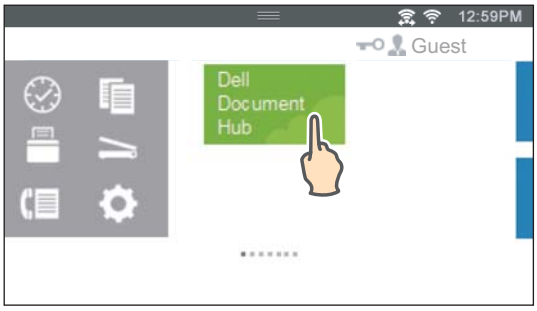

Scrolling the Screen or the Listed Items

Swipe the screen by dragging your finger on the screen.

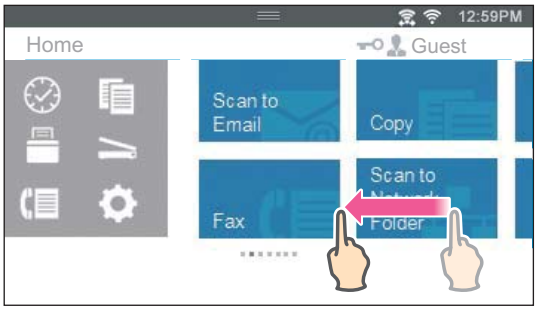

To scroll faster, flick the screen.

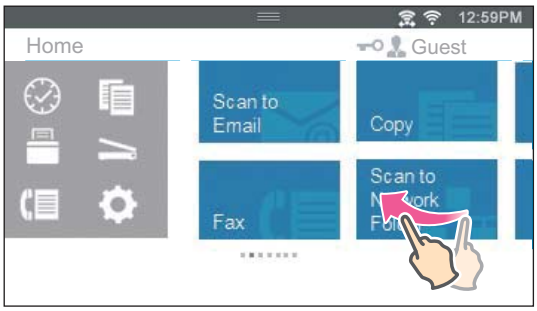

NOTE:

- If you cannot swipe or flick on some screens, operate by tapping the tiles or buttons.

Moving, Adding or Deleting the Tiles

NOTE:

- This is available when you select the local authentication. See "User Authentication."

To Move the Tiles

Tap and hold the tile you want to move, and then drag it to the desired place.

The short orange bar appears between the tiles to show the nearest drop point when you are dragging the tile.

You can move the tile between pages as well.

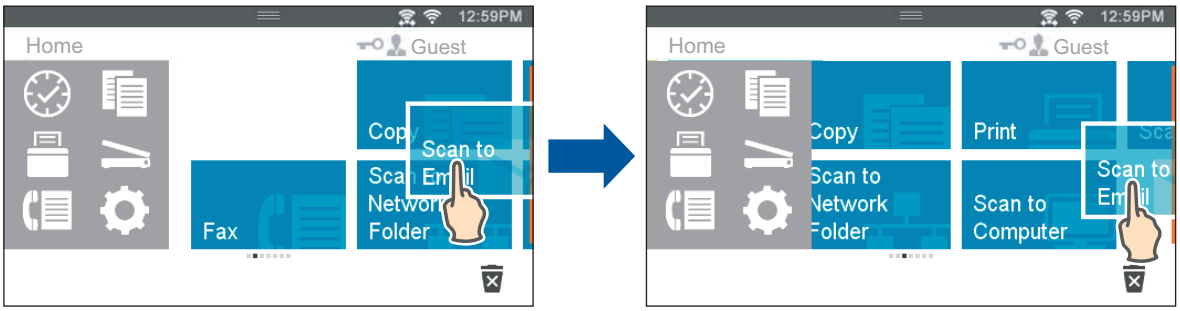

NOTE:

- You cannot move the tiles in the Recent group screen of the Dock menu.

To Add the Tiles

Swipe the screen to display the last page of the `Home` screen or group screen, and then

tap Add App.

When the Apps List screen appears, tap the tile you want to add to the Home screen.

To Delete the Tiles

Tap and hold the tile you want to delete.

When appears, drag the tile to .

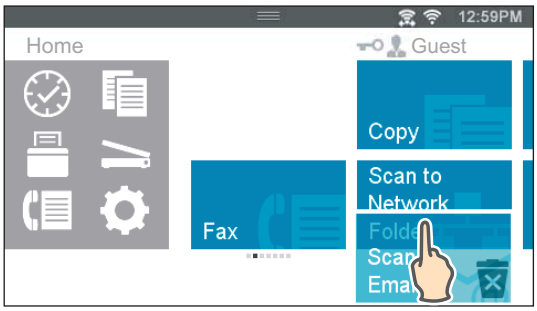

Tap OK to delete the tile.

NOTE:

- To delete all tiles in the Recent group screen of the Dock Menu, tap in the Recent group screen, and then tap OK.

Using the Keyboard Displayed on the Touch Panel

During operations, a keyboard for entering text sometimes appears. The following describes how to enter text.

QWERTY

AZERTY

QWERTZ

You can enter the following characters:

Item	Description
Entering alphabets	To enter uppercase letters, tap . To return to the lowercase letters, tap again. To lock to the uppercase letters, double-tap .
Entering numbers and symbols	Tap ?123 .
Entering a space	Tap .
Deleting characters	Tap to delete one character at a time.

To Change the Keyboard Layout

1 Press the (**Information**) button.

2 Tap the Tools tab → Language Settings → Keyboard Layout.

3 Tap the desired keyboard layout, and then tap OK.

Changing the Language

1 Press the ⓘ (**Information**) button.

2 Tap the `Tools` tab → `Language Settings` → `Panel Language`.

3 Tap ▼ until the desired language appears, and then tap the desired language.

4 Tap `OK`.

Panel Lock

The Panel Lock feature allows some system settings to be kept in a locked state with the password so that unauthorized personnel cannot access to the menu to change the settings.

NOTE:

- Disabling the operator panel menus does not prevent access to the `Stored Print` and `Tray Settings` menus.

Enabling the Panel Lock

1 Press the ⓘ (**Information**) button.

2 Tap the `Tools` tab → `Admin Settings`.

3 Tap ▼ until `Secure Settings` appears, and then tap `Secure Settings`.

4 Tap `Panel Lock` → `Panel Lock Control` → `Enable` → `OK`.

5 Enter the new password, and then tap `OK`.

6 Re-enter the password, and then tap `OK`.

CAUTION:

- **Make sure not to forget the password. If you forget the password, the following procedure allows you to reset the password. However, the settings for the `Address Book` and `Phone Book` will be reset as well.**
  1 Turn off the printer.
  2 While holding the ⓘ (**Information**) button, turn on the printer.

Changing the Panel Lock Password

NOTE:

- You can change the password only when `Panel Lock` is set to `Enable`.

1 Press the ⓘ (**Information**) button.

2 Tap the `Tools` tab → `Admin Settings`.

3 Enter the password.

4 Tap until `Secure Settings` appears, and then tap `Secure Settings`.

5 Tap `Panel Lock` → `Change Password`.

6 Enter the current password, and then tap `OK`.

7 Enter the new password, and then tap `OK`.

8 Re-enter the password, and then tap `OK`.

Disabling the Panel Lock

1 Press the (**Information**) button.

2 Tap the `Tools` tab → `Admin Settings`.

3 Enter the password.

4 Tap ▼ until `Secure Settings` appears, and then tap `Secure Settings`.

5 Tap `Panel Lock` → `Panel Lock Control` → `Disable` → `OK`.

6 Enter the current password, and then tap `OK`.

Setting the Power Saver Timer

The printer enters the power saver mode when the printer is not used for a certain period of time. You can set the `Power Saver Timer` for the printer on the operator panel.

1 Press the (**Information**) button.

2 Tap the `Tools` tab → `Admin Settings` → `System Settings` → `General` → `Power Saver Timer`.

If `Panel Lock Control` is set to `Enable`, enter the password. See "Panel Lock."

3 Tap `Sleep` or `Deep Sleep`.

4 Tap – or +, or use the number pad to enter the desired value.

You can specify from 1 to 50 minutes for `Sleep` or 1 to 10 minutes for `Deep Sleep`.

5 Tap `OK`.

About the Concurrent Jobs Feature

This feature enables you to start a concurrent job while a fax job is running. This is done by temporarily displaying the `Home` screen and switching to a different function that can be run concurrently such as copy or scan.

1 While the printer is sending or receiving a fax, press the (**Home**) button.

2 Tap → `Copy`.

Or

Tap → Scan.

3 Change the copy or scan settings.

For details about the settings, see "Copying" or "Scanning."

4 Tap `OK`.

Understanding the System Menus

The system menus are configured by `Information`, `Supplies`, and `Tools` tabs, accessible by pressing the ⓘ (**Information**) button on the operator panel.

You can limit the access to the some menus by setting the password.

This prevents other users from using the operator panel to inadvertently change the settings. See "Panel Lock."

Report / List

Use the `Report / List` menu to print various types of reports and lists.

To display the `Report / List` menu, press the ⓘ (**Information**) button, and then tap the `Information` tab.

Report / List >

System Settings

Prints a list of the current user default values, the installed options, the amount of installed print memory, and the status of printer supplies.

Report / List >

Panel Settings

Prints a detailed list of all the settings of the printer menus.

Report / List >

PCL Fonts List

Prints a sample of the available Printer Control Language (PCL) fonts.

Report / List >

PCL Macros List

Prints the information on the downloaded PCL macro.

Report / List >

PS Fonts List

Prints a sample of the available PostScript (PS) fonts.

Report / List >

PDF Fonts List

Prints a sample of the available PDF fonts.

Report / List >

Job History

Prints a detailed list of the print, copy, fax, or scan jobs that have been processed. This list contains the last 20 jobs.

Report / List >

Error History

Prints a detailed list of paper jams and fatal errors.

Report / List >

Print Meter

Prints the reports for the total number of pages printed.

Report / List >

Color Test Page

Prints a page for testing colors.

Report / List >

Protocol Monitor

Prints a detailed list of monitored protocols.

Report / List >

Speed Dial

Prints the list of all members stored as speed dial numbers.

Report / List >

Address Book

Prints the list of all addresses stored as address book information.

Report / List >

Server Address

Prints the list of all members stored as server address information.

Report / List >

Fax Activity

Prints the report of faxes you recently received or sent.

Report / List >

Fax Pending

Prints the list of status of pending faxes.

Report / List >

Stored Documents

Prints a list of all files stored for Secure Print, Private Mail Box Print, Public Mail Box Print, and Proof Print in the RAM disk.

NOTE:

- Stored Documents feature is available only when `RAM Disk` in `General` under `System Settings` is enabled.

Printing a Report / List

1 Press the ⓘ (**Information**) button.

2 Tap `Report / List`.

3 Tap ▼ until the desired report or list appears, and then select that report or list.

4 Tap `Print`.

Wi-Fi | WPS

NOTE:

- Wi-Fi Direct is available on Dell H625cdw and Dell H825cdw.

Use the `Wi-Fi | WPS` menu to confirm or specify wireless network settings or connections.

To display the `Wi-Fi | WPS` menu, press the ⓘ (**Information**) button, and then tap the `Information` tab.

Wi-Fi | WPS >

Wi-Fi

Use the `Wi-Fi` menu to confirm or specify wireless network settings. For details, see "Wi-Fi."

Wi-Fi | WPS >

Wi-Fi Direct

Use the `Wi-Fi Direct` menu to confirm or specify Wi-Fi Direct network settings. For details, see "Wi-Fi Direct."

Wi-Fi | WPS >

WPS (Connect via PBC)

Use `WPS (Connect via PBC)` menu to start configurations of the Wi-Fi Direct network with WPS-PBC. For details, see "WPS Setup."

Wi-Fi | WPS >

WPS (Connect via PIN)

Use `WPS (Connect via PIN)` menu to start configurations of the Wi-Fi Direct network with WPS-PIN. For details, see "WPS Setup."

Paired Device

NOTE:

- Wi-Fi Direct is available on Dell H625cdw and Dell H825cdw.

Use the `Paired Device` menu to confirm the device name in the `Paired Device` list, if there is any device connected to the printer via Wi-Fi Direct.

You can disconnect the paired device. For details, see "Disconnecting Wi-Fi Direct Network."

Admin Settings

Each feature of the printer is set to the factory default settings.

Use the `Admin Settings` menu to customize the settings in accordance with the setting environment, or your preferences.

To display the `Admin Settings` menu, press the ⓘ (**Information**) button, and then tap the `Tools` tab.

Admin Settings >

Phone Book

Use the `Phone Book` menu to configure the speed dial and group dial settings.

Admin Settings > **Phone Book >**

Individuals

Stores up to 200 frequently dialed numbers in speed dial locations.

Admin Settings > **Phone Book >**

Groups

Creates a group of fax destinations and register it under a two-digit dial code. Up to six group dial codes can be registered.

Admin Settings >

PCL

Use the `PCL` menu to change printer settings that only affect jobs using the Printer Control Language (PCL) emulation printer language.

Admin Settings > **PCL >**

Paper Tray

Specifies the default paper tray.

Admin Settings > **PCL >**

Paper Size

Specifies the default paper size.

NOTE:

- Selecting a custom size for the paper size prompts you to enter a custom length and width.

Admin Settings > **PCL >**

Orientation

Specifies how text and graphics are oriented on the page.

Portrait	Prints text and graphics parallel to the short edge of the paper.
Landscape	Prints text and graphics parallel to the long edge of the paper.

Admin Settings > **PCL >**

2 Sided Print

Specifies whether to print on one side or both sides of a sheet of print media. For a two-sided printing, you can specify the printout to be bound by the long edge or short edge.

Admin Settings > **PCL >**

Font

Specifies the default font from the fonts registered in the printer.

Admin Settings > **PCL >**

Symbol Set

Specifies a symbol set for a specified font.

Admin Settings > **PCL >**

Font Size

Specifies the font size for scalable typographic fonts. Font size refers to the height of the characters in the font. One point equals approximately 1/72 of an inch (approximately 0.35 mm).

NOTE:

- The `Font Size` menu is only displayed for typographic fonts.

Admin Settings > **PCL >**

Font Pitch

Specifies the font pitch for scalable mono spaced fonts. Font pitch refers to the number of fixed-space characters in a horizontal inch of type. For non-scalable mono spaced fonts, the pitch is displayed, but cannot be changed.

NOTE:

- The `Font Pitch` menu is only displayed for fixed or mono spaced fonts.

Admin Settings > **PCL >**

Form Line

Sets the number of lines in a page. The printer sets the amount of space between two vertical lines based on the `Form Line` and `Orientation` menu items. You can select the correct `Form Line` and `Orientation` before changing `Form Line`.

Admin Settings > **PCL >**

Quantity

Sets the default print quantity. Set the number of copies required for a specific job from the print driver. Values selected from the print driver always override values selected from the operator panel.

Admin Settings > **PCL >**

Image Enhance

Specifies whether to enable the Image Enhance feature, which makes the boundary line between black and white smoother to decrease jagged edges and enhance the visual appearance.

Admin Settings > **PCL >**

Hex Dump

Specifies whether to enable the Hex Dump feature, which helps to isolate the source of a print job problem. With Hex Dump selected, all data sent to the printer is printed in hexadecimal and character representation. Control codes are not executed.

Admin Settings > **PCL >**

Draft Mode

Specifies whether to enable the Draft Mode feature, which saves toner by printing in the draft mode. The print quality is reduced when printing in the draft mode.

Admin Settings > **PCL >**

Line Termination

Adds the line termination commands.

Off	The line termination command is not added. CR=CR, LF=LF, FF=FF
Add-LF	The LF command is added. CR=CR-LF, LF=LF, FF=FF
Add-CR	The CR command is added. CR=CR, LF=CR-LF, FF=CR-FF
CR-XX	The CR and LF commands are added. CR=CR-LF, LF=CR-LF, FF=CR-FF

Admin Settings > **PCL >**

Default Color

Specifies the color mode. This setting is used for a print job that does not specify a print mode.

Admin Settings > **PCL >**

Ignore Form Feed

Specifies whether to enable the Ignore Form Feed feature, which ignores blank pages that only contain Form Feed control codes.

Admin Settings >

PS

Use the `PS` (PostScript) menu to change printer settings that only affect jobs using the PostScript Level3 Compatible emulation printer language.

Admin Settings > **PS >**

PS Error Report

Specifies whether to enable the PS Error Report feature, which specifies the contents of the errors concerning PostScript Level3 Compatible page description language are printed.

The change becomes effective after the printer is turned off and then on again.

NOTE:

- Instructions from the PS driver override the settings specified on the operator panel.

Admin Settings > **PS >**

PS Job Time-out

Specifies whether to enable the PS feature, which specifies the execution time for one PostScript Level3 Compatible job. The change becomes effective after the printer is turned off and then on again.

Admin Settings > **PS >**

Paper Select Mode

Specifies the way to select the tray for PostScript Level3 Compatible mode. The change becomes effective after the printer is turned off and then on again.

Auto	The tray is selected as the same setting as in the PCL mode.
Select From Tray	The tray is selected in a method compatible with regular PostScript Level3 Compatible printers.

Admin Settings > **PS >**

Default Color

Specifies the color mode to `Color` or `Black`. This setting is used for a print job which does not specify a print mode.

Admin Settings >

PDF

Use the `PDF` menu to change printer settings that only affect the PDF jobs.

Admin Settings > **PDF >**

Quantity

Specifies the number of copies to print.

Admin Settings > **PDF >**

2 Sided Print

Specifies whether to print on one side or both sides of a sheet of print media. For a two-sided printing, you can specify the printout to be bound by the long edge or short edge.

Admin Settings > **PDF >**

Print Mode

Specifies the print mode.

Normal	For documents with normal sized characters.
High Quality	For documents with small characters or thin lines, or documents printed using a dot-matrix printer.
High Speed	Prints with the higher speed than the Normal mode, but the quality is less.

Admin Settings > **PDF >**

PDF Password

Specifies the password to print a PDF file secured with a password to open the PDF file.

Admin Settings > **PDF >**

Collation

Specifies whether to sort the PDF job.

Admin Settings > **PDF >**

Output Size

Specifies the output paper size for the PDF file.

Admin Settings > **PDF >**

Layout

Specifies the output layout.

Auto %	Prints the document in the layout specified by the printer.
100% (No Zoom)	Prints in the same size as the document.
Booklet	Prints on both sides of a sheet of paper bound by the edge.
2 Pages Up	Prints two pages on one side of a sheet of paper.
4 Pages Up	Prints four pages on one side of a sheet of paper.

Admin Settings > **PDF >**

Default Color

Specifies the default output color.

Admin Settings > **PDF >**

Detect Job Separator

Specifies whether to detect the end of the job in printing PDF files successively.

Admin Settings >

Network

Use the `Network` menu to change the printer settings affecting jobs sent to the printer through the wired or wireless network.

Admin Settings > **Network >**

Wi-Fi

NOTE:

- When the Ethernet cable is disconnected, the `Wi-Fi | WPS` menu is available.
- Wireless network is available on Dell H625cdw and Dell H825cdw.

Checks or specifies network settings.

Admin Settings > Network > **Wi-Fi >**

Wi-Fi

NOTE:

- Wireless network is available on Dell H625cdw and Dell H825cdw.

Specifies whether to enable the Wi-Fi feature.

Admin Settings > Network > **Wi-Fi >**

Wi-Fi Status

NOTE:

- Wi-Fi Status setting is available only when the printer is connected using the wireless network.
- Wireless network is available on Dell H625cdw and Dell H825cdw.

Checks the wireless communication status.

Status	Good

	Acceptable Low No Reception
SSID	Displays the name that identifies the wireless network.
Encryption Type	Displays the encryption type.

Admin Settings > Network > **Wi-Fi>**

Wi-Fi Setup Wizard

NOTE:

- Wi-Fi Setup Wizard is available only when the printer is connected using the wireless network.
- Wireless network is available on Dell H625cdw and Dell H825cdw.

Configures the wireless network interface.

Admin Settings > Network > Wi-Fi > **Wi-Fi Setup Wizard >**

Select access point

Selects the access point from the list.

WEP Key	When you select an access point using WEP as the encryption type, enter the WEP key.
PassPhrase	When you select an access point using WPA, WPA2, or Mixed as the encryption type, enter the passphrase.

Admin Settings > Network > Wi-Fi > **Wi-Fi Setup Wizard >**

Manual SSID Setup

Configures the wireless settings using the operator panel manually.

Admin Settings > Network > Wi-Fi > Wi-Fi Setup Wizard > **Manual SSID Setup >**

SSID

Specifies a name to identify the wireless network. Up to 32 alphanumeric characters can be entered.

Admin Settings > Network > Wi-Fi > Wi-Fi Setup Wizard > Manual SSID Setup > **SSID >**

Infrastructure

Selects when you configure the wireless setting through the access point such as a wireless.

No Security		Specifies No Security to configure the wireless setting without specifying an encryption type from WEP and WPA-PSK-AES.
Mixed mode PSK		Selects to configure the wireless setting with the encryption type of Mixed mode PSK. Mixed mode PSK automatically selects the encryption type from either WPA-PSK-AES or WPA2-PSK-AES.
	Passphrase	Specifies the passphrase of alphanumeric characters from 8 to 63.
WPA2-PSK-AES		Selects to configure the wireless setting with the encryption type of WPA2-PSK-AES.
	Passphrase	Specifies the passphrase of alphanumeric characters from 8 to 63. (hex: 0-9, a-f, A-F, 16 to 64 characters)
WEP		Specifies the WEP key to use through the wireless network. For 64bit keys, up to 10 hexadecimal characters can be entered. For 128bit keys, up to 26 hexadecimal characters can be entered.
	Transmit Key	Specifies the transmit key from **Auto** and **WEP Key 1** - **4**.

Admin Settings > Network > Wi-Fi > Wi-Fi Setup Wizard > Manual SSID Setup > **SSID >**

Ad-hoc

Selects to configure the wireless setting without the access point such as a wireless router.

No Security		Configures the wireless setting without specifying the encryption type from WEP.
WEP		Specifies the WEP key to use through the wireless network. For 64bit keys, up to 10 hexadecimal characters can be entered. For 128bit keys, up to 26 hexadecimal characters can be entered.
	Transmit Key	Specifies the transmit key from **WEP Key 1** - **4**.

Admin Settings > Network > **Wi-Fi >**

WPS Setup

NOTE:

- WPS Setup is available only when the printer is connected using the wireless network.
- WPS Setup is available on Dell H625cdw and Dell H825cdw.

Configures the wireless network using WPS.

Push Button Configuration	Configures the wireless setting with Wi-Fi Protected Setup-Push Button Configuration (WPS-PBC) .
PIN Code	Configures the wireless setting using the PIN code assigned by the printer. You can also print the PIN code. Check it when entering PIN assigned to the printer into your computer.

Admin Settings > Network > **Wi-Fi >**

IP Mode

Configures the IP mode.

Dual Stack	Uses both IPv4 and IPv6 to set the IP address.
IPv4 Mode	
IPv6 Mode	

Admin Settings > Network > **Wi-Fi >**

TCP/IP

Configures TCP/IP settings.

Get IP Address	**AutoIP**	Sets the IP address automatically. A random value in the range of 169.254.1.0 to 169.254.254.255 that is not currently in use on the network is set as the IP address. The subnet mask is set as 255.255.0.0.
	BOOTP	Sets the IP address using BOOTP.
	RARP	Sets the IP address using RARP.
	DHCP	Sets the IP address using DHCP.
	Panel	Use this option when you want to set the IP address manually on the operator panel.
IP Address		When an IP address is being set manually, the IP is allocated to the printer using the format nnn.nnn.nnn.nnn. Each octet that makes up nnn.nnn.nnn.nnn is a value in the range of 0 to 254. 127 and any value in the range of 224 to 254 cannot be specified for the first octet of a gateway address.

Subnet Mask	When an IP address is being set manually, the subnet mask is specified using the format nnn.nnn.nnn.nnn. Each octet that makes up nnn.nnn.nnn.nnn is a value in the range of 0 to 255.255.255.255.255 cannot be specified as the subnet mask.
Gateway Address	When an IP address is being set manually, the gateway address is specified using the format nnn.nnn.nnn.nnn. Each octet that makes up nnn.nnn.nnn.nnn is a value in the range of 0 to 254. 127 and any value in the range of 224 to 254 cannot be specified for the first octet of a gateway address.

Admin Settings > Network > **Wi-Fi >**

IPsec

NOTE:

- IPsec is displayed only when **IPsec** is enabled on the Dell Printer Configuration Web Tool.

Disables IPsec.

Admin Settings > Network > **Wi-Fi >**

Reset Wi-Fi

NOTE:

- Reset Wi-Fi setting is available only when the printer is connected to the wireless network.
- Wireless network is available on Dell H625cdw and Dell H825cdw.

Initializes wireless network settings. After executing this setting and restarting the printer, all wireless network settings are reset to their default values.

Admin Settings > **Network >**

Wi-Fi Direct

NOTE:

- When the Ethernet cable is connected, or `Wi-Fi` is set to `Off`, `Wi-Fi Direct` is disabled.
- Wi-Fi Direct is available on Dell H625cdw and Dell H825cdw.

Configures the Wi-Fi Direct network settings.

Wi-Fi Direct			Enables or disables the Wi-Fi Direct network.
Group Role	**Auto**		Automatically resolves the group role for Wi-Fi Direct.
	Group Owner		Sets the printer as the Group Owner when using Wi-Fi Direct. Setting the printer to become the group owner makes it possible for mobile devices to discover the printer. The SSID of the printer is displayed in the list of wireless networks on your mobile device.
Device Name			Specifies the printer name that identifies the Wi-Fi Direct network with up to 32 alphanumeric characters. Check it when selecting the printer name on your mobile device.
Paired Device			Displays the status of the Wi-Fi Direct connections between the printer and up to 3 Wi-Fi mobile devices.
	Disconnect All	**Disconnect now**	Disconnects all the Wi-Fi Direct connections right now.
		Disconnect and Reset Passphrase	Disconnects the Wi-Fi Direct connections and resets the passphrase.

SSID			Displays the name that identifies the Wi-Fi Direct network. You can also specify the name with up to 32 alphanumeric characters. "DIRECT-XX" cannot be changed. Check it when selecting the Wi-Fi Direct network name on your mobile device.
Passphrase			Displays the passphrase. Check it when entering the passphrase into your mobile device.
	Print Passphrase		Prints the passphrase. Check it when entering the passphrase into your mobile device.
	Reset Passphrase		Resets the passphrase.
WPS Setup			Configures the Wi-Fi Direct network using WPS.
	Push Button Configuration		Configures the Wi-Fi Direct network with Wi-Fi Protected Setup-Push Button Configuration (WPS-PBC).
	PIN Code		Configures the Wi-Fi Direct network using PIN code assigned by the printer.
		Print PIN Code	Prints the PIN code. Check it when entering PIN assigned to the printer into your mobile device.
		Reset Code	Resets the PIN code.

Admin Settings > **Network >**

Ethernet

NOTE:

- When using a wired network, the `Wi-Fi | WPS` menu is not available.

Checks or specifies network settings.

Admin Settings > Network > **Ethernet >**

IP Mode

Configures the IP mode.

Dual Stack	Uses both IPv4 and IPv6 to set the IP address.
IPv4 Mode	
IPv6 Mode	

Admin Settings > Network > **Ethernet >**

TCP/IP

Configures TCP/IP settings.

Get IP Address	**AutoIP**	Sets the IP address automatically. A random value in the range of 169.254.1.0 to 169.254.254.255 that is not currently in use on the network is set as the IP address. The subnet mask is set as 255.255.0.0.
	BOOTP	Sets the IP address using BOOTP.
	RARP	Sets the IP address using RARP.
	DHCP	Sets the IP address using DHCP.
	Panel	Use this option when you want to set the IP address manually on the operator panel.

IP Address	When an IP address is being set manually, the IP is allocated to the printer using the format nnn.nnn.nnn.nnn. Each octet that makes up nnn.nnn.nnn.nnn is a value in the range of 0 to 254. 127 and any value in the range of 224 to 254 cannot be specified for the first octet of a gateway address.
Subnet Mask	When an IP address is being set manually, the subnet mask is specified using the format nnn.nnn.nnn.nnn. Each octet that makes up nnn.nnn.nnn.nnn is a value in the range of 0 to 255.255.255.255.255 cannot be specified as the subnet mask.
Gateway Address	When an IP address is being set manually, the gateway address is specified using the format nnn.nnn.nnn.nnn. Each octet that makes up nnn.nnn.nnn.nnn is a value in the range of 0 to 254. 127 and any value in the range of 224 to 254 cannot be specified for the first octet of a gateway address.

Admin Settings > Network > **Ethernet >**

IPsec

NOTE:

- IPsec is displayed only when **IPsec** is enabled on the Dell Printer Configuration Web Tool.

Disables IPsec.

Admin Settings > Network > **Ethernet >**

Connection Speed

NOTE:

- The Connection Speed setting is available only when the printer is connected to the wired network.

Specifies the communication speed and the duplex settings of Ethernet. The change becomes effective after the printer is turned off and then on again.

Auto
10BASE-T Half
10BASE-T Full
100BASE-TX Half
100BASE-TX Full
1000BASE-T Full

Admin Settings > **Network >**

Protocols

Enables or disables each protocol. The change becomes effective after the printer is turned off and then on again.

LPD
Port9100
FTP
IPP
SMB TCP/IP
WSD Print[*1]
WSD Scan
Network TWAIN
SNMP UDP[*2]

E-mail Alert
Dell Printer Configuration Web Tool
Bonjour(mDNS)
Telnet
Update Address Book
HTTP-SSL/TLS
Google Cloud Print
Print from Dell Document Hub[*3]
Scan to Dell Document Hub[*3]

[*1] Stands for Web Services on Devices
[*2] Stands for Simple Network Management Protocol
[*3] This is available on Dell H625cdw and Dell H825cdw.

Admin Settings > **Network >**

Advanced Settings

Specifies advanced network settings.

Admin Settings > Network > **Advanced Settings >**

IP Filter

NOTE:

- The IP Filter setting is available only for LPD or Port9100.
- Wireless network is available on Dell H625cdw and Dell H825cdw.

Specifies whether to block data received through the wired or wireless network.

IPv4-Filter	Enables or disables IPv4 Filter.
IPv6-Filter	Enables or disables IPv6 Filter.

Admin Settings > Network > **Advanced Settings >**

IEEE 802.1x

NOTE:

- IEEE 802.1x is displayed only when the printer is connected using Ethernet cable and it is available only when the IEEE 802.1x authentication is enabled.

Disables IEEE 802.1x authentication. The change becomes effective after the printer is turned off and then on again.

Admin Settings > Network > **Advanced Settings >**

PS Data Format

Specifies PostScript Level3 Compatible communication protocol for a parallel interface, you can configure the `PS Data Format` settings for the wired network. The change becomes effective after the printer is turned off and then on again.

Auto	Used when auto-detecting the PostScript Level3 Compatible communication protocol.
Standard	Used when the communication protocol is in ASCII interface.
BCP	Used when the communication protocol is in binary format.
TBCP	Used when the communication protocol supports both ASCII and binary data to switch between them according to the specified control code.
Binary	Used when no special processing is required for data.

Admin Settings > **Network >**

Reset LAN

Initializes wired network data stored in non-volatile memory (NVM). After executing this setting and restarting the printer, all wired network settings are reset to their default values.

Admin Settings > **Network >**

Delete All Certificates

Deletes all certificates of the printer. After executing this setting and restarting the printer, all certificates are deleted.

Admin Settings >

Fax Settings

Use the `Fax Settings` menu to configure the basic fax settings.

Admin Settings > **Fax Settings >**

Fax Line Settings

Configures basic settings for the fax line.

Admin Settings > Fax Settings > **Fax Line Settings >**

Fax Number

Sets the fax number of the printer to be printed on the header of a fax message.

NOTE:

- Make sure to specify `Fax Number` before using `Junk Fax Setup`.

Admin Settings > Fax Settings > **Fax Line Settings >**

Country

Selects the country where the printer is used.

Admin Settings > Fax Settings > **Fax Line Settings >**

Fax Header Name

Sets the sender name to be printed on the header on faxes.

Admin Settings > Fax Settings > **Fax Line Settings >**

Line Type

Specifies the default line type to `PSTN` or `PBX`.

Admin Settings > Fax Settings > **Fax Line Settings >**

Line Monitor

Specifies whether to enable the Line Monitor setting. Set the volume of the line monitor, which audibly monitors a transmission through the internal speaker until a connection is made.

Admin Settings > Fax Settings > **Fax Line Settings >**

DRPD Pattern

Provides a separate number for faxing with a distinctive ring pattern.

Pattern1–7	Distinctive Ring Pattern Detection (DRPD) is a service provided by some telephone companies. DRPD Patterns are specified by your telephone company. The following shows the patterns provided with the printer. 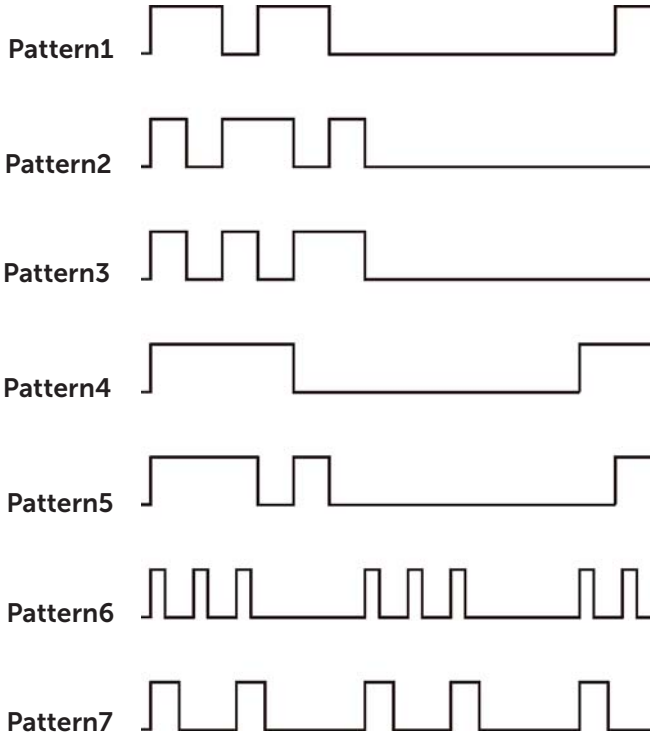 Ask your telephone company which pattern you need to select to use this service. For example, Pattern7 is the New Zealand FaxAbility distinctive ringing pattern: rings for 400 ms, stops for 800 ms, rings for 400 ms and stops for 1400 ms. This pattern is repeated over and over again. This printer only responds to Distinctive Alert cadence(s) DA4 in New Zealand.

Admin Settings > **Fax Settings >**

Incoming Defaults

Configures settings for incoming fax.

Admin Settings > Fax Settings > **Incoming Defaults >**

Receive Mode

Selects the default fax receiving mode.

Telephone	Automatic fax reception is turned off. You can receive a fax by picking up the handset of the external telephone and then pressing the remote receive code, or by tapping `Manual Receive` in `On Hook` and then tapping `Receive`.
Fax	Automatically receives faxes.
Telephone / Fax	When the printer receives an incoming fax, the external telephone rings for the time specified in `Auto Receive Tel/Fax`, and then the printer starts receiving the fax. If an incoming call is not a fax, the printer beeps from the internal speaker indicating that the call is a telephone call.

Ans Machine/Fax	This mode is intended for use with an answering machine. When the answering machine receives the call, the printer monitors the call for fax tones. When the printer detects fax tones, the printer automatically receives the fax. When the answering machine is off, the printer goes into the `Fax` mode after the ring tone sounds for a predefined time. If the phone communication in your country is serial, this mode is not supported.
DRPD	Before using the Distinctive Ring Pattern Detection (DRPD) option, a distinctive ring service must be installed on your telephone line by the telephone company. After the telephone company has provided a separate number for faxing with a distinctive ring pattern, configure the fax setup to monitor for that specific ring pattern.

Admin Settings > Fax Settings > **Incoming Defaults >**

Ring Tone Volume

Specifies whether to enable the Ring Tone Volume setting. Set the volume of the ring tone, which indicates that an incoming call is a telephone call through the internal speaker when `Receive Mode` is set to `Telephone / Fax`.

Admin Settings > Fax Settings > **Incoming Defaults >**

Auto Receive Setup

Configures settings for automatic fax reception.

Auto Receive Fax	Sets the interval at which the printer goes into the fax receive mode after receiving an incoming call.
Auto Receive Tel/Fax	Sets the interval at which the printer goes into the fax receive mode after the external telephone receives an incoming call.
Auto Receive Ans/Fax	Sets the interval at which the printer goes into the fax receive mode after the external answering machine receives an incoming call.

Admin Settings > Fax Settings > **Incoming Defaults >**

Junk Fax Setup

Specifies whether to enable the Junk Fax Setup feature, which rejects unwanted faxes by accepting faxes only from the fax numbers registered in the Phone Book.

Admin Settings > Fax Settings > **Incoming Defaults >**

Secure Receive

NOTE:

- The Secure Receive feature is available only when `Panel Lock Control` is set to `Enable`.

Specifies whether to require a password to print received faxes, and to set or change the password.

Secure Receive Set	Sets to require a password to print received faxes.
Change Password*	Sets or changes the four-digit password required to print received faxes.

* This item is available only when `Secure Receive Set` is set to `Enable`.

Admin Settings > Fax Settings > **Incoming Defaults >**

Received Fax Forward

Sets whether to forward incoming faxes to a specified destination.

Off

Forward		Forwards incoming faxes to a specified destination. Prints incoming faxes if an error occurs during the transfer.
	Forwarding Number	Specifies the fax number of the destination to which incoming faxes are forwarded.
Print and Forward		Prints incoming faxes and also forwards them to a specified destination.
	Forwarding Number	Specifies the fax number of the destination to which incoming faxes are forwarded.
Forward to Email [*1,2,3]		Forwards incoming faxes to specified e-mail addresses. Prints incoming faxes if an error occurs during the transfer.
Print and Forward to E-mail[*2,3]		Prints incoming faxes and also forwards them to a specified e-mail address.
Forward to Server		Forwards incoming faxes to a specified server address. Prints incoming faxes if an error occurs during the transfer.
Print and Forward to Server		Prints incoming faxes and also forwards them to a specified server address.

[*1] Depending on the e-mail server settings, the printer may not get an error which occurs during the transfer.
[*2] This item is available only when the `E-Mail Server` information is registered. See "E-Mail Server."
[*3] This item is available only when `Forwarding E-mail Address` is registered. See "Fax Settings."

Admin Settings > Fax Settings > **Incoming Defaults >**

2 Sided Print

Specifies whether to enable the 2 Sided Print feature, which sets the duplex printing for fax.

NOTE:

- Duplex print may not be done depending on the size of the received faxes or settings of the trays, etc.

Admin Settings > Fax Settings > **Incoming Defaults >**

Remote Receive

Specifies whether to enable the Remote Receive feature, which receives a fax by pressing a remote receive code on the external telephone after picking up the handset of the telephone. You can specify the tone in two digits to start `Remote Receive`.

Admin Settings > Fax Settings > **Incoming Defaults >**

Discard Size

Specifies whether to enable the Discard Size feature, which sets the printer to discard images or any text at the bottom of a fax page when the entire page does not fit the output paper. You can also set to automatically reduce a fax page to fit it onto the appropriate paper size.

Admin Settings > **Fax Settings >**

Transmission Defaults

Configures settings for transmitting fax.

Admin Settings > Fax Settings > **Transmission Defaults >**

Auto Redial Setup

Configures settings for automatic redial.

Redial Attempts	Sets the number of redial attempts to make when the destination fax number is busy. If you enter 0, the printer does not redial.
Interval of Redial	Sets the interval between redial attempts.
Resend Delay	Sets the interval between re-send attempts.

Admin Settings > Fax Settings > **Transmission Defaults >**

Tone / Pulse

Selects the dialing type.

Tone	Uses tone dialing.
Pulse(10PPS)	Sets Dial Pulse, 10 Pulse Per Second as the dial type.
Pulse(20PPS)	Sets Dial Pulse, 20 Pulse Per Second as the dial type.

Admin Settings > Fax Settings > **Transmission Defaults >**

Prefix Dial

Specifies whether to enable the Prefix Dial feature, which sets a prefix dial number. You can set a prefix dial number of up to five digits. This number dials before any auto dial number is started. It is useful for accessing the Private Automatic Branch Exchange (PABX).

Admin Settings > Fax Settings > **Transmission Defaults >**

Fax Cover Page

Specifies whether to enable the Fax Cover Page feature, which sets to attach a cover page to faxes.

Admin Settings > Fax Settings > **Transmission Defaults >**

Fax Header

Specifies whether to enable the Fax Header feature, which prints the sender information on the header of the faxes.

NOTE:

- If `United States` is selected for the setting of `Country`, this option does not appear on the menu. The setting is fixed to `On` and cannot be changed. See "Specifying the Fax Initial Settings Using the Operator Panel."

Admin Settings > Fax Settings > **Transmission Defaults >**

ECM

Specifies whether to enable the ECM (Error Correction Mode) feature. To use the ECM, the remote machines must also support the ECM.

Admin Settings > Fax Settings > **Transmission Defaults >**

Modem Speed

Adjusts the fax modem speed when a fax transmission or reception error occurs.

Admin Settings > Fax Settings > **Transmission Defaults >**

Display Manual Fax Recipients

Specifies whether to enable the Display Manual Fax Recipients feature, which displays the fax number of the recipient on the `Sending Fax` screen when manually sending a fax.

Admin Settings > **Fax Settings >**

Fax Reports

Configures settings for fax reports.

Admin Settings > Fax Settings > **Fax Reports >**

Fax Activity

Sets whether to automatically print a fax activity report after every 50 incoming and outgoing fax communications.

Auto Print
No Auto Print

Admin Settings > Fax Settings > **Fax Reports >**

Fax Transmit

Sets whether to print a transmission result after a fax transmission.

Print Always	Prints a transmission report after every fax transmission.
Print On Error	Prints a transmission report only when an error occurs.
Print Disable	Does not print a transmission report after a fax transmission.

Admin Settings > Fax Settings > **Fax Reports >**

Fax Broadcast

Sets whether to print a transmission result after a fax transmission to multiple destinations.

Print Always	Prints a transmission report after every fax transmission.
Print On Error	Prints a transmission report only when an error occurs.
Print Disable	Does not print a transmission report after a fax transmission to multiple destinations.

Admin Settings > Fax Settings > **Fax Reports >**

Fax Protocol

Sets whether to print the protocol monitor report, which helps you identify the cause of a communication problem.

Print Always	Prints a protocol monitor report after every fax transmission.
Print On Error	Prints the protocol monitor report only when an error occurs.
Print Disable	Does not print the protocol monitor report.

Admin Settings >

System Settings

Use `System Settings` to configure the power saving mode, warning tones, time-out duration, display language, and job log auto print settings.

Admin Settings > **System Settings >**

General

Configures general settings for the printer.

Admin Settings > System Settings > **General >**

Power Saver Timer

Specifies the time for transition to power saver mode.

Sleep	Specifies the time taken by the printer to enter the Sleep mode after it finishes a job.
Deep Sleep	Specifies the time taken by the printer to enter the Deep Sleep mode after it has entered Sleep mode.
Power Off Timer	Specifies whether to enable the Power Off Timer and the time taken by the printer to enter the Power Off Timer mode after it has entered the Deep Sleep mode.

When you specify 1 minute for `Sleep`, the printer enters power saver mode 1 minute after it finishes a job. This uses much less energy, but requires more warm-up time for the printer. Specify 1 minute if the printer shares an electrical circuit with room lighting and you notice lights flickering.

Select a high value if the printer is in constant use. In most circumstances, this keeps the printer ready to operate with minimum warm-up time.

Select a medium value if you want a balance between energy consumption and a shorter warm-up period.

The printer returns to the standby mode from the power saver mode when it receives data from the computer or remote fax machine. You can also change the status of the printer to the standby mode by pressing any button on the operator panel.

Admin Settings > System Settings > **General >**

Date & Time

Specifies the date and time formats.

Time Zone		Sets the time zone.
Date		Sets the date depending on the `Format` settings.
	Format	Sets the date format.
Time		Sets the time.
	Format	Sets the time format.

Admin Settings > System Settings > **General >**

mm / inch

Specifies the default measurement unit displayed after the numeric value on the touch panel.

NOTE:

- The default for `mm / inch` varies depending on other settings, such as `Country` and `Document Size`.

Admin Settings > System Settings > **General >**

Screen Brightness

Adjusts the screen brightness of the touch panel.

Admin Settings > System Settings > **General >**

Audio Tone

Specifies whether to enable the Audio Tone feature, which emits a tone during operation or when a warning message appears.

Control Panel	Selects the volume for a tone when the operator panel input is correct.
Invalid Key	Selects the volume for a tone when the operator panel input is incorrect.
Machine Ready	Selects the volume for a tone when the printer is ready to process a job.
Copy Completed	Selects the volume for a tone when a copy job is complete.
Job Completed	Selects the volume for a tone when a job other than a copy job is complete.
Fault Tone	Selects the volume for a tone when a job ends abnormally.
Alert Tone	Selects the volume for a tone when a problem occurs.
Out of Paper	Selects the volume for a tone when the printer runs out of paper.
Low Toner Alert	Selects the volume for a tone when a toner is low.
Auto Clear Alert	Selects the volume for a tone 5 seconds before the printer performs auto clear.
NFC Authentication*	Selects the volume for a tone when an NFC card is placed on the NFC reader for authentication.
All Tones	Selects the volume for all the alert tones.

* This is available on Dell H625cdw and Dell H825cdw.

Admin Settings > System Settings > **General >**

Low Toner Alert Message

Specifies whether to enable the Low Toner Alert Message feature, which shows the alert message when the toner is low.

Admin Settings > System Settings > **General >**

OffHook Wake Up

Specifies whether to enable the OffHook Wake Up feature, which wakes up from the Sleep or Deep Sleep mode when you pick up the handset of the external telephone.

Admin Settings > System Settings > **General >**

Auto Log Print

Specifies whether to enable the Auto Log Print feature, which automatically prints a job history report after every 20 jobs.

Print logs can also be printed using the `Report / List` menu.

Admin Settings > System Settings > **General >**

RAM Disk

Specifies whether to enable the RAM Disk feature, which allocates memory to the RAM disk file system for the Secure Print, Private MailBox Print, Public Mail Box Print, and Proof Print features. The change becomes effective after the printer is turned off and then on again.

NOTE:

- Turn off the printer, and then turn it on again to apply the settings for the `RAM Disk` menu.

Admin Settings > System Settings > **General >**

Fax Server Phone Book

Specifies whether to enable the Fax Server Phone Book feature, which searches the

phone numbers from the Phone Book for the LDAP server.

NOTE:

- You can search the phone numbers only from the local Phone Book when `Fax Server Phone Book` is set to `Off`.

Admin Settings > System Settings > **General >**

E-mail Server Address Book

Specifies whether to enable the E-mail Server Address Book feature, which searches the e-mail addresses from the Address Book for the LDAP server.

NOTE:

- You can search the e-mail addresses only from the local Address Book when `E-mail Server Address Book` is set to `Off`.

Admin Settings > System Settings > **General >**

Power On Wizard

Performs initial setup for the printer.

Admin Settings > System Settings > **General >**

Max E-mail Size

Specifies the maximum size of e-mail that can be sent.

Admin Settings > **System Settings >**

Timers

Configures timer settings.

Admin Settings > System Settings > **Timers >**

Auto Reset

Automatically resets the settings for Copy, Scan, Fax, E-mail, or Print to the default settings and return to the standby mode after you do not specify any settings for the specified time.

Admin Settings > System Settings > **Timers >**

Fault Time-out

Specifies whether to enable the Fault Time-out feature, which specifies the amount of time the printer waits before canceling a job that stops abnormally. The print job is canceled if the time-out time is exceeded.

Admin Settings > **System Settings >**

Output Settings

Configures settings concerning output from the printer.

Admin Settings > System Settings > **Output Settings >**

Default Paper Size

Specifies the default paper size.

Admin Settings > System Settings > **Output Settings >**

Print ID

Specifies whether to enable the Print ID feature, which specifies a location where the

user ID is printed.

NOTE:

- When printing on DL size paper, a part of the user ID may not be printed correctly.

Admin Settings > System Settings > **Output Settings >**

Print Text

Specifies whether to enable the Print Text feature. This feature outputs Page Description Language (PDL) data, which is not supported by the printer, as text when the printer receives it. Text data is printed on A4 or Letter size paper.

Admin Settings > System Settings > **Output Settings >**

Banner Sheet

Specifies the position of banner sheet, and also specify the tray in which the banner sheet is loaded.

Insert Position	**Off**	Does not print the banner sheet.
	Front	Inserted before the first page of every copy.
	Back	Inserted after the last page of every copy.
	Front & Back	Inserted before the first page of every copy and after the last page of every copy.
Specify Tray		The banner sheet is loaded in the Multipurpose Feeder (MPF)/tray1/optional 550-sheet feeder.

Admin Settings > System Settings > **Output Settings >**

Substitute Tray

Specifies whether to use paper of a different size when the paper that is loaded in the specified tray does not match the paper size settings for the current job.

Off	No tray size substitute accepted.
Larger Size	Substitutes paper of next largest size. When there is no larger paper size, the printer substitutes paper of nearest size.
Nearest Size	Substitutes paper of nearest size.
Use MPF	Substitutes paper from the Multipurpose Feeder (MPF).

Admin Settings > System Settings > **Output Settings >**

Letterhead 2 Sided

Specifies whether to enable the Letterhead 2 Sided feature, which prints on both sides when using letterhead.

Admin Settings > System Settings > **Output Settings >**

A4<>Letter Switch

Specifies whether to enable the A4<>Letter Switch feature. This feature prints A4 size jobs on Letter size paper if A4 size paper is not available or to print Letter size jobs on A4 size paper if Letter size paper is not available.

Admin Settings > System Settings > **Output Settings >**

A5<>Statement Switch

Specifies whether to enable the A5<>Statement Switch feature. This feature prints A5 size jobs on Statement size paper if A5 size paper is not available or to print Statement size jobs on A5 size paper if Statement size paper is not available.

Admin Settings > System Settings > **Output Settings >**

Report 2 Sided Print

Specifies whether to print reports on one side or both sides of a sheet of print media.

Admin Settings > System Settings > **Output Settings >**

Use Another Tray

Specifies whether to enable the Use Another Tray feature, which changes to another paper tray when paper runs out in the specified paper tray.

NOTE:

- The size of image to print is not adjusted automatically. If you select another paper tray with paper size smaller than the paper size specified in the job, the parts that are larger than the print media are not printed.

Admin Settings > System Settings > **Output Settings >**

Resume Printing After Jam Recovery

Specifies whether to enable the Resume Printing After Jam Recovery feature. This feature deletes print job after recovering from paper jam.

Admin Settings > **System Settings >**

Set Available Time

Sets the available time for the Copy, Scan, Fax, and Print functions.

Copy/Scan/Fax/Print	**Set Available Time**	Specifies whether to set the time when function is available.
	Start Time	
	End Time	
	Recurrence	Sets the day of the week to repeat the setting.

NOTE:

- `Set Available Time` can be configured when `Print`, `Copy`, `Scan`, or `Fax` is set to `On`.

Admin Settings > **System Settings >**

Secure Job Expiration

NOTE:

- Secure Job Expiration feature is available only when `RAM Disk` is set to `On`.

Specifies the date and time to delete the files stored as Secure Print in the RAM disk.

Expiration Mode	Sets whether to enable or disable the Secure Job Expiration feature.
Expiration Time	Sets the time to delete the files stored as Secure Print in the RAM disk.
Recurrence	Sets the recurrence to delete the files stored as Secure Print in the RAM disk.
Weekly Setting	Sets the day of the week to delete the files stored as Secure Print in the RAM disk.
Monthly Setting	Sets the day of the month to delete the files stored as Secure Print in the RAM disk.

Admin Settings > **System Settings >**

ColorTrack Mode

Specifies whether to enable the ColorTrack Mode feature, which limits access to color printing.

Admin Settings > **System Settings >**

Non Registered User

Specifies whether to enable the Non Registered User feature, which permits the printing of data without authentication information.

Admin Settings > **System Settings >**

Auto Color To Mono Print

NOTE:

- The Auto Color To Mono Print feature is available when Dell ColorTrack is disabled.

Specifies whether to enable the Auto Color To Mono Print feature, which prints all print jobs in black and white even when color print is specified.

Admin Settings > **System Settings >**

ColorTrack Error Report

Specifies whether to enable the ColorTrack Error Report feature, which prints error-related information if printing with ColorTrack results in an error.

Admin Settings > **System Settings >**

NFC - Tap to Print

Specifies whether to add the printer to a mobile device such as a tablet or a notebook computer by tapping the device to the ((NFC)) (**NFC**) reader.

NOTE:

- This is available on Dell H625cdw and Dell H825cdw.

Admin Settings > **System Settings >**

Calibration

Specifies tray to calibrate the machine regularly. This feature corrects consistency of printing colors over time, environment and print media.

Admin Settings >

Maintenance

Use the `Maintenance` menu to initialize the non-volatile (NV) memory, configure the plain paper quality adjustment settings, and configure the security settings.

Admin Settings > **Maintenance >**

Paper Density

Specifies paper density settings.

Admin Settings > **Maintenance >**

Adjust Transfer Belt Unit

Adjusts the transfer bias when the faint image of the previous page, a part of the page currently printing, etc. appear on the output.

K Offset	If faint black colored ghosts appear, try to decrease the value.
YMC Offset	If faint ghosts in color (yellow, magenta, or cyan) appear, try to decrease the value.

Admin Settings > **Maintenance** >

Adjust 2nd BTR

NOTE:

- The print quality changes depending on the setting values you select for this item.

Specifies the transfer roller voltage adjustment for each paper type. If you see mottles on the print output, try to increase the voltage. If you see white spots on the print output, try to decrease the voltage.

Admin Settings > **Maintenance** >

Adjust Fusing Unit

NOTE:

- The print quality changes depending on the setting values you select for this item.

Adjusts the temperature setting of the fusing unit for each paper type. When the printouts are curled, try to lower the temperature. When the toner does not fuse on the paper properly, try to increase the temperature.

Admin Settings > **Maintenance** >

Color Reg Adjust

Auto Correct	Automatically performs color registration correction.

Admin Settings > **Maintenance** >

Clean Developer

Stirs the developer in the drum cartridge.

Admin Settings > **Maintenance** >

Toner Refresh

Cleans the toner in the drum cartridge.

NOTE:

- The Toner Refresh feature uses the toner, and shorten the life of the toner cartridge and the drum cartridge.

Admin Settings > **Maintenance** >

Reset Defaults

Initializes the non-volatile (NV) memory. After executing this setting and restarting the printer, all the menu parameters are reset to their default values.

User Fax Section	Initializes the fax number entries in the Address Book.
User Scan Section	Initializes the e-mail and server address entries in the Address Book.
User Account Section	Initializes the user registration information.
User App Section	Initializes the widget application information.
System Section	Initializes the system parameters.

Admin Settings > **Maintenance** >

Initialize Print Meter

Initializes the print meter of the printer. When the print meter is initialized, the meter count is reset to zero.

Admin Settings > **Maintenance** >

Clear Stored Jobs

NOTE:

- The Clear Stored Jobs feature is available only when `RAM Disk` is set to `On`.

Clears all files stored as Secure Print, Private Mail Box Print, Public Mail box Print, Proof Print, and Stored Print in the RAM disk.

All	Deletes all files stored as Secure Print, Private Mail Box Print, Public Mail Box Print, and Proof Print in the RAM disk.
Secure Document	Deletes all files stored as Secure Print in the RAM disk.
Stored Document	Deletes all files stored as Stored Print in the RAM disk.

Admin Settings > **Maintenance** >

Non-Dell Toner

Specifies whether to enable the Non-Dell Toner feature, which uses toner cartridge of another manufacturer.

CAUTION:

- **Using a non-Dell™ toner cartridge may severely damage the printer. The warranty does not cover damages caused by using non-Dell toner cartridges.**

Admin Settings > **Maintenance** >

Adjust Altitude

Specifies the altitude of the location where the printer is installed.

The discharge phenomenon for charging the photo conductor varies with barometric pressure. Adjustments are performed by specifying the altitude of the location where the printer is being used.

NOTE:

- An incorrect altitude adjustment setting leads to poor printing quality, incorrect indication of remaining toner, etc.

Admin Settings > **Maintenance** >

Decrease Ghosting

Reduces negative ghost.

Admin Settings > **Maintenance** >

Clear Job History

Clears the job history of all finished jobs.

Admin Settings > **Maintenance** >

Fax Line Test

NOTE:

- The Fax Line Test feature is not available when the Fax function is disabled.

Tests if the voltage supply from the fax line is sufficient.

Admin Settings >

Secure Settings

Use the `Secure Settings` menu to set a password to limit access to the menus. This

prevents items from being changed accidentally.

Admin Settings > **Secure Settings >**

Panel Lock

Specifies whether to enable the Panel Lock feature, which sets a limited access to `Admin Settings` with a password, and to set or change the password.

Panel Lock Control	Sets password protection for `Admin Settings`.
Change Password*	Sets or changes the four-digit password required to access `Admin Settings`.

* This item is available only when `Panel Lock Control` is set to `Enable`.

Admin Settings > **Secure Settings >**

Functions Control

NOTE:

- The Functions Control setting is available only when `Panel Lock Control` is set to `Enable`.

Specifies whether to enable or disable each of the printer functions, or to restrict the use of a function with a password. For `Copy` and `USB Direct Print`, you can restrict just the color printing and color copying features with a password.

Copy		Enables or disables the Copy function. You can also restrict the function with a password by setting to `On (Password)` or `On (Color Password)`.
Scan to E-mail		Enables or disables the Scan to E-mail feature. You can also restrict the feature with a password using `On (Password)`.
Fax		Enables or disables the Fax function. You can also restrict the function with a password using `On (Password)`.
Fax Driver		Enables or disables the Fax Driver function.
Scan to Network Folder		Enables or disables the Scan to Network Folder feature. You can also restrict the feature with a password using `On (Password)`.
Scan to Computer		Enables or disables the Scan to Computer feature. You can also restrict the feature with a password using `On (Password)`.
PC Scan		Enables or disables the PC Scan feature. You can also restrict the feature with a password using `On (Password)`.
Scan to USB		Enables or disables the Scan to USB feature. You can also restrict the feature with a password using `On (Password)`.
USB Direct Print		Enables or disables the USB Direct Print feature. You can also restrict the feature with a password using `On (Password)` or `On (Color Password)`.
ID Copy		Enables or disables the ID Copy feature.
USB Service	**Show When Inserted**	Enables or disables this setting to show the `USB Drive Detected` screen when a USB memory is inserted in to the printer.

Automatic Doc Detected Menu	Enables or disables this feature for the printer to detect document loaded in the DADF and show DADF related menus on the touch panel.
Change Password*	Changes the four-digit password that is set under the `Functions Control` menu.

* This item is available only when `On (Password)` or `On (Color Password)` is enabled.

Admin Settings > **Secure Settings >**

Desktop Authentication

Specifies the Desktop Authentication method.

NOTE:

- `Desktop Authentication` is displayed on Dell S2825cdn only.

Local Authentication	Use the local authentication method.
Remote Authentication	Use the remote authentication method.

Admin Settings > **Secure Settings >**

Edit E-mail From Fields

Specifies whether to enable the Edit E-mail From Fields feature, which enables editing of the transmission source when you use Scan to Email.

Admin Settings > **Secure Settings >**

Reconfirm Recipient

Specifies whether to reconfirm the recipient before sending a fax or scan.

NOTE:

- If the `Reconfirm Recipient` menu is set to `Reconfirm Recipient`, recipients can only be selected from the phone book or the address book. You cannot directly enter an address or fax number.

No Confirmation	Does not display a screen to reconfirm the recipient before the job is actually sent.
Reconfirm Recipient	Displays a screen to reconfirm the recipient before the job is actually sent.

Admin Settings > **Secure Settings >**

Domain Filtering

Specifies whether to enable the Domain Filtering feature, which sends e-mails to specified domains.

NOTE:

- Set the domains from **SMTP Domain Filtering** on the Dell Printer Configuration Web Tool.

Admin Settings > **Secure Settings >**

Software Download

Specifies whether to enable the Software Download feature, which enables download of firmware updates.

Admin Settings > **Secure Settings >**

Display of Network Information

Shows or hides network information in the message field of the `Home` screen.

Show IPv4 Address
Show Host Name
Hide Network Information

Admin Settings > **Secure Settings >**

Login Error

NOTE:

- Login Error feature is available only when `Panel Lock Control` is set to `Enable`.

Specifies whether to enable the Login Error feature, which specifies the number of error entry attempts allowed when you log in as an administrator in `Admin Settings` and the `Report / List` menu.

Admin Settings > **Secure Settings >**

NFC Authentication

Specifies whether to enable the NFC Authentication setting, which enables the authentication using the NFC authentication card.

NOTE:

- This is available on Dell H625cdw and Dell H825cdw.

Admin Settings >

USB Settings

Use the `USB Settings` menu to change printer settings affecting a USB port.

Admin Settings > **USB Settings >**

USB Port

NOTE:

- USB Port setting is available only for the USB port on the rear of the printer.

Specifies whether to enable the USB Port setting, which enables the USB Port. The change becomes effective after the printer is turned off and then on again.

Admin Settings > **USB Settings >**

PS Data Format

Specifies PostScript Level3 Compatible communication protocol for a parallel interface. You can configure the PS Data Format settings for the wired network. The change becomes effective after the printer is turned off and then on again.

Auto	Used when auto-detecting the PostScript Level3 Compatible communication protocol.
Standard	Used when the communication protocol is in ASCII interface.
BCP	Used when the communication protocol is in binary format.
TBCP	Used when the communication protocol supports both ASCII and binary data to switch between them according to the specified control code.
Binary	Used when no special processing is required for data.

Admin Settings > **USB Settings >**

Job Time-out

Specifies whether to enable the Job Time-out feature, which specifies the amount of time the printer waits for data to arrive from the computer. The print job is canceled if the time-out time is exceeded.

Default Settings

Use `Default Settings` menu to modify the `Copy`, `Scan`, or `Fax` menu defaults.

To display the `Default Settings` menu, press the ⓘ (**Information**) button, and then tap the `Tools` tab.

Default Settings >

Copy Defaults

Modifies the `Copy` menu defaults. `Copy Defaults` allows you to configure the following items in addition to the items under the `Copy` menu. See "Copy."

Default Settings > **Copy Defaults >**

Auto Exposure Level

Sets the default background suppression level to Normal/High/Highest.

Default Settings > **Copy Defaults >**

Color Balance

Sets the color balance level of low/medium/high density for each color.

Default Settings >

Fax Defaults

Modifies the `Fax` menu defaults. `Fax Defaults` allows you to configure the items under the `Fax` menu. See "Fax."

Default Settings >

Scan Defaults

Modifies the `Scan` menu defaults. `Scan Defaults` allows you to configure the following items in addition to the items under the `Scan` menu. See "Scan Settings."

Default Settings > **Scan Defaults >**

Auto Exposure Level

Sets the default background suppression level.

Default Settings > **Scan Defaults >**

TIFF File Format

Specifies the default TIFF file format to `TIFF V6` or `TTN2`.

Default Settings > **Scan Defaults >**

Image Compression

Sets the image compression level.

Default Settings >

Direct Print Defaults/USB Direct Print Defaults

Modifies the defaults for the `Direct Print Defaults/USB Direct Print Defaults` menu. See "Print PDF/TIFF."

NOTE:

- For Dell H625cdw and Dell H825cdw, `Direct Print Defaults` is displayed. For Dell S2825cdn, `USB Direct Print Defaults` is displayed.

Tray Management

Use the `Tray Management` menu to define the print media loaded in tray1 and the optional 550-sheet feeder.

To display the `Tray Management` menu, press the ⓘ (**Information**) button, and then tap the `Tools` tab.

Tray Management >

Tray Settings

Configures tray settings.

Tray Management > **Tray Settings >**

MPF

Specifies the paper loaded in the Multipurpose Feeder (MPF).

Display Tray Prompt		Select the checkbox to display a popup message that prompts to set paper type and paper size when paper is loaded in the MPF. The factory default is on (selected).
MPF Mode	**Use Panel Settings**	Uses the paper size and type specified on the operator panel.
	Use Printer Driver Settings	Uses the paper size and type specified on the print driver.
	Manual	When the print job is started, the printer pauses the job and shows the screen to prompt the user to load the paper of the specified size and type. To continue the job, check that the specified paper is loaded, and then tap `Continue` in the screen on the touch panel.
Size		Specifies the paper size.
Type		Specifies the paper type.

Tray Management > **Tray Settings >**

Tray1

Specifies the paper loaded in tray1.

Display Tray Prompt	Select the checkbox to display a popup message that prompts to set Paper Type and Paper Size when paper is loaded in tray1. The factory default is on (selected).
Size	Specifies the paper size.
Type	Specifies the paper type.

NOTE:

- For details about supported paper sizes, see "Supported Print Media."

Tray Management > **Tray Settings >**

Tray2

NOTE:

- The Tray2 setting is available only when the optional 550-sheet feeder is installed.

Specifies the paper loaded in the optional 550-sheet feeder.

Display Tray Prompt	Select the checkbox to display a popup message that prompts to set Paper Type and Paper Size when paper is loaded in the optional 550-sheet feeder. The factory default is on (selected).
Size	Sets whether to specify the paper size automatically or manually.
Type	Specifies the paper type.

Tray Management >

Tray Priority

Sets the priority order of the paper trays for automatic tray selection. If paper trays loaded with the same paper size and type exists, the paper tray is selected according to this priority order.

Language Settings

Use the `Language Settings` menu to configure `Panel Language`, or `Keyboard Layout`.

To display the `Language Settings` menu, press the ⓘ (**Information**) button, and then tap the `Tools` tab.

Language Settings >

Panel Language

Determines the language of the text on the touch panel.

Language Settings >

Keyboard Layout

Selects the keyboard layout on the touch panel.

Resetting Defaults

After executing this setting and restarting the printer, the phone book, address book, or menu parameters are reset to their default values.

The following menu parameters are exceptions and are not reset.

- Network settings
- `Panel Lock` settings and password
- Functions Control settings for `Copy`, Scan to E-mail, `Fax`, `Scan to Network Folder`, Scan to Computer, `PC Scan`, `Scan to USB`, `USB Direct Print` and saved passwords
- `Secure Receive` settings and saved password
- `Login Error` settings
- `Set Available Time` settings
- `Secure Job Expiration` settings
- `USB Port` settings

- `ColorTrack Mode` settings
- `ColorTrack Error Report` settings
- `Non Registered User` settings
- `NFC Authentication` settings
- Tap to Print settings

To reset the settings, perform the following procedure:

1. Press the ⓘ (**Information**) button.
2. Tap the `Tools` tab → `Admin Settings` → `Maintenance`.
   If `Panel Lock Control` is set to `Enable`, enter the password. See "Panel Lock."
3. Tap ▼ until `Reset Defaults` appears, and then tap `Reset Defaults`.
4. Tap the desired setting, and then tap `Initialize`.

User Fax Section	Resets the phone book data.
User Scan Section	Resets the address book data.
User Account Section	Resets the user registration information.
User App Section	Resets the widget application information.
System Section	Resets the system parameters.

5. Tap `Yes`, `Reset`.
   The printer restarts.

Understanding the Job Menus

Print

Use the `Print` menus to configure various settings for the Secure Print, Private Mail Box Print, Public Mail Box Print, and Proof Print features.

To display the `Print` job menu, press the (**Home**) button, tap , and then select the `Print` tile.

Print >

Secure Print

NOTE:

- Secure Print feature is available only when `RAM Disk` is set to `On`.

Specifies whether and how to print the job stored as the Secure Print.

Select User ID		Enters the password you specified on the print driver.
	Select a Job	Selects a job to print.
	Select All	Selects all the documents stored for this User ID.
	Print and Delete	Prints the selected job, and then deletes the document from print memory.
	Delete	Deletes the specified document from print memory.

Print >

Private Mailbox

NOTE:

- Private Mailbox feature is available only when `RAM Disk` is set to `On`.

Specifies whether and how to print the job stored as the Private Mailbox.

Select User ID			Enters the password you specified on the print driver.
	Select a Job		Selects a job to print.
	Select All		Selects all the documents stored for this User ID.
	Quantity		Specifies the quantity of printout.
		Use Driver Settings	Sets the quantity of prints specified on the print driver.
	Print		Prints the selected job.
		Print and Delete	Deletes the document after it is printed.
	Delete		Deletes the specified document from print memory.

Print >

Public Mailbox

NOTE:

- Public Mailbox feature is available only when `RAM Disk` is set to `On`.

Specifies whether and how to print the job stored as the Public Mailbox.

Select User ID		Enters the password you specified on the print driver.
	Select a Job	Selects a job to print.

	Select All		Selects all the documents stored for this User ID.
	Quantity		Specifies the quantity of printout.
		Use Driver Settings	Sets the quantity of prints specified on the print driver.
	Print		Prints the selected job.
		Print and Delete	Deletes the document after it is printed.
	Delete		Deletes the specified document from print memory.

Print >

Proof Print

NOTE:

- Proof Print feature is available only when `RAM Disk` is set to `On`.

Specifies whether and how to print the job stored as the Proof Print.

Select User ID			Enters the password you specified on the print driver.
	Select a Job		Selects a job to print.
	Select All		Selects all the documents stored for this User ID.
	Quantity		Specifies the quantity of printout.
		Use Driver Settings	Sets the quantity of prints specified on the print driver.
	Print		Prints the selected job.
		Print and Delete	Deletes the document after it is printed.
	Delete		Deletes the specified document from print memory.

Print >

Secure Fax Receive

Prints confidential faxes. The printer can hold the job in memory until you arrive at the printer and type the password on the operator panel.

Print >

Tile Settings

Use the tile settings to create and edit custom tile for the `Print` menus.

Copy

Use the `Copy` menus to configure various settings for the copy function.

To display the `Copy` job menu, press the (**Home**) button, tap , and then select the `Copy` tile.

Copy >

Quantity

Specifies the number of copies from 1 to 99.

Copy >

Darken/Lighten

Makes the copy darker or lighter.

Copy >

Output Color

Selects color or black and white copying.

Copy >

Select Tray

Specifies the input tray.

MPF		The paper is fed from the Multipurpose Feeder (MPF). When `Use Printer Driver Settings` is set in `MPF Configuration` of `Tray Settings`, `Any` is displayed for `Size` and `Type`. If you start the copy job with `Any` as the paper size and type, `A4` or `Letter` is selected as the paper size and `plain` is selected as the paper type. If you want to specify the size and type of paper in the MPF, select `MPF` and specify the paper size and type.
	Paper Size	Specifies the paper size.
	Paper Type	Specifies the paper type.
Tray1		
Tray2*		

* This item is available only when the optional 550-sheet feeder is installed.

Copy >

2 Sided Copying

Specifies whether to make duplex copy and select the binding position.

1 → 1 Sided	Copies one-sided documents into one-sided printouts.
1 → 2 Sided	Copies one-sided documents into two-sided printouts. You can specify whether the printout is bound by the long edge or short edge.
2 → 1 Sided	Copies two-sided documents into one-sided printouts. Before starting the copy, you need to specify whether the document is bound by the long edge or short edge.
2 → 2 Sided	Copies two-sided documents into two-sided printouts. Before starting the copy, you need to specify whether the document is bound by the long edge or short edge.

Copy >

Sharpness

Adjusts the sharpness to make the copy sharper or softer.

Copy >

Reduce/Enlarge

Reduces or enlarges the size of a copied image. You can also enter a custom ratio.

Copy >

Original Size

Specifies the default document size.

NOTE:

- When `Auto` is selected, the printer assumes that the document size is the size of the print media loaded in tray1 or the MPF.

Copy >

Original Type

Improves the image quality by selecting the type of the document.

Copy >

Collation

Specifies whether to sort the copy job. For example, if you make two copies of three-page document, one complete set of three-page document is printed one by one. You can also automatically sort a copy job only when you use the Duplex Automatic Document Feeder (DADF).

Copy >

2-Up

Prints every two pages of documents to fit onto one sheet of paper.

Off	
Auto	Automatically reduces to fit onto one sheet of paper.
Manual	Specify the reduce/enlarge ratio in `Reduce/Enlarge`.

Copy >

Color Saturation

Adjusts the amount of colors to make the colors darker or lighter.

Copy >

Margin

Specifies the top, bottom, right, left, and middle margins of the copy.

Copy >

Auto Exposure

Specifies whether to enable the Auto Exposure feature, which suppresses the background of the original to enhance text on the copy.

Copy >

Save Settings

Use the save settings to save a variety of copy features. And also use to create and edit custom tiles for copying.

ID Copy

Use the `ID Copy` menus to configure various settings for ID Copy features.

To display the `ID Copy` job menu, press the (Home) button, tap , and then select the `ID Copy` tile.

Quantity	See "Copy."
Darken/Lighten	
Output Color	
Select Tray	
Sharpness	
Color Saturation	
Auto Exposure	
Reduce/Enlarge	

ID Copy >

Save Settings

Use the save settings to save various settings for ID Copy features. And also use to create and edit custom tiles for ID Copy.

Scan to Email

Use the `Scan to Email` menus to use the e-mail to send the scanned data. See "Scan Settings."

To display the `Scan to Email` job menu, press the (**Home**) button, tap , and then select the `Scan to Email` tile.

Enter Recipient's Address		Enters the e-mail address of the recipient using the keyboard.
Address Book	**Individuals**	Selects an e-mail address from the local address book.
	Groups	Selects an e-mail group from the local address book.
	Network Address Book	Searches an e-mail address from the server address book.
Sender	**Keyboard**	Enters the e-mail address of the sender using the keyboard.
	Address Book	Selects an e-mail address of the sender from the local address book.
	Network Address Book	Searches an e-mail address of the sender from the server address book.

Scan to Network Folder

Use the `Scan to Network Folder` menus to store the scanned data on a network server or a computer. See "Scan Settings."

To display the `Scan to Network` job menu, press the (**Home**) button, tap , and then select the `Scan to Network` tile.

Address Book	Selects an FTP address or Server Message Block (SMB) protocol address from the local address book.

Scan to USB

Use the `Scan to USB` menus to save the scanned data to a USB flash drive attached to the printer. See "Scan Settings."

To display the `Scan to USB` job menu, press the (**Home**) button, tap , and then select the `Scan to USB` tile.

Folder Name	Selects which folder the scanned data is saved to.

Scan to Computer

Use the `Scan to Computer` to save scanned data on a computer.

To display the `Scan to Computer` job menu, press the (**Home**) button, tap , and then select the `Scan to Computer` tile.

NOTE:

- This feature is available when the operating system of the client computer is Windows Vista® SP2 or later, Windows® 7, Windows® 8, Windows® 8.1, or Windows® 10.

Computer (via USB)		Saves scanned data on a computer connected via USB cable.
Computer Name		Selects which computer the scanned data is saved to. Up to 20 computers can be listed.
	Scan	Sends the scanned data to the computer according to the chosen event. The program associated with depends on the setting on the computer.
	Scan for Print	
	Scan for Email	
	Scan for Fax	
	Scan for OCR	

Scan to Computer >

Tile Settings

Use the tile settings to create and edit custom tiles for Scan to Computer.

Scan to Email / Scan to Network Folder / Scan to USB / Scan to Computer >

Scan Settings

NOTE:

- The scan settings are common for Scan to Email, Scan to Network Folder, Scan to USB, and Scan to Computer features.

Scan to Email / Scan to Network Folder / Scan to USB / Scan to Computer > **Scan Settings >**

Output Color

Selects color or black and white scanning.

Color	
Black & White	Works well for documents with texts.
Gray Scale	Works well for documents with texts and photos.

Scan to Email / Scan to Network Folder / Scan to USB / Scan to Computer > **Scan Settings >**

Resolution

Specifies the resolution of the scanned data.

Scan to Email / Scan to Network Folder / Scan to USB / Scan to Computer > **Scan Settings >**

File Format

Specifies the file format to save the scanned data.

Scan to Email / Scan to Network Folder / Scan to USB / Scan to Computer > **Scan Settings >**

2 Sided Scanning

Specifies whether to scan one side or both sides of a document. For a two-sided document, specify whether the document is bound by the long edge or short edge.

Scan to Email / Scan to Network Folder / Scan to USB / Scan to Computer > **Scan Settings >**

Darken/Lighten

Adjusts the density to make the scanned data darker or lighter.

Scan to Email / Scan to Network Folder / Scan to USB / Scan to Computer > **Scan Settings >**

Contrast

Adjusts the contrast of scanned data. Higher contrast makes the colors darker and lower contrast makes the colors lighter than the original.

Scan to Email / Scan to Network Folder / Scan to USB / Scan to Computer > **Scan Settings >**

Sharpness

Adjusts the sharpness to make the scanned data sharper or softer.

Scan to Email / Scan to Network Folder / Scan to USB / Scan to Computer > **Scan Settings >**

Auto Exposure

Specifies whether to enable the Auto Exposure feature, which suppresses the background of the original to enhance text on the scanned data.

Scan to Email / Scan to Network Folder / Scan to USB / Scan to Computer > **Scan Settings >**

Original Size

Specifies the default paper size.

Scan to Email / Scan to Network Folder / Scan to USB / Scan to Computer > **Scan Settings >**

Margin

Specifies the top, bottom, right, left, and middle margins of the scanned data.

Scan to Email / Scan to Network Folder / Scan to USB / Scan to Computer > **Scan Settings >**

Create Folder

NOTE:

- Create Folder feature is available only for Scan to USB or Scan to Network Folder.

Specifies whether to enable the Create Folder feature, which creates a folder when saving scanned data.

Scan to Email / Scan to Network Folder / Scan to USB / Scan to Computer > **Scan Settings >**

File Naming Mode

Specifies the detailed setting of **File Naming Mode**.

Auto		Sets the default file name.
Add Prefix		Adds texts in front of the file name.
	Prefix/Suffix String	Specifies the texts that are added when `Add Prefix` is selected.
Add Suffix		Adds texts after the file name.
	Prefix/Suffix String	Specifies the texts that are added when `Add Suffix` is selected.

Scan to Email / Scan to Network Folder / Scan to USB / Scan to Computer >

Save Settings

Use the save settings to save various settings for the scan function when using Scan to Email, Scan to USB, Scan to Network Folder, or Scan to Computer. And also use to create and edit custom tiles for scanning.

Fax

Use the `Fax` menus to configure various settings for the fax function.

To display the `Fax` job menu, press the (**Home**) button, tap , and then select the `Fax` tile.

NOTE:

- The Fax function cannot be used unless you set up a country code under `Country`. If `Country` is not set up, a message `Set the Country Code` appears on the touch panel.

Enter Number		Enters the fax number using the keyboard.
Speed Dial		Enters the speed dial number stored in the printer.
Phone Book	**Individuals**	Selects a fax number from the local address book.
	Groups	Selects a group dial number from the local address book.
	Network Phone Book	Searches a fax number from the server address book.
On Hook	**Send**	Sends faxes manually.
	Receive	Receives faxes manually.
	Polling	Manually retrieves information from a remote machine.

Fax >

Fax Settings

Use the fax settings to configure various settings for the fax function.

Fax > **Fax Settings >**

Darken/Lighten

Adjusts the density to make the fax darker or lighter.

Fax > **Fax Settings >**

2 Sided Scanning

Specifies whether to scan one side or both sides of a document. For a two-sided document, specify whether the document is bound by the long edge or short edge.

Fax > **Fax Settings >**

Polling Receive

Specifies whether to enable the Polling Receive feature, which retrieves faxes from the remote fax machine when you want to receive it.

Fax > **Fax Settings >**

Resolution

Specifies the scan resolution to improve the output quality.

Standard	Suitable for documents with normal sized characters.

Fine	Suitable for documents containing small characters or thin lines or documents printed using a dot-matrix printer.
Super Fine	Suitable for documents containing extremely fine detail. The `Super Fine` mode is enabled only if the remote machine also supports the `Super Fine` mode. See the following note.
Photo	Suitable for documents containing photographic images.

NOTE:

- Data scanned in the `Super Fine` mode is transmitted at the highest resolution supported by the remote machine.

Fax > **Fax Settings >**

Fax Cover Page

Specifies whether to enable the Fax Cover Page feature, which attaches a cover page to faxes.

Fax > **Fax Settings >**

Delayed Send

Specifies whether to enable the Delayed Send feature, which sends a fax at a later time.

NOTE:

- A maximum of 19 delayed fax jobs can be stored.

Fax > **Fax Settings >**

Save Settings

Use the save settings to save various settings for the fax function. And also use to create and edit custom tiles for faxing.

NOTE:

- Up to 30 addresses can be stored on the printer.

Print PDF/TIFF

NOTE:

- Print PDF/TIFF feature is available only when a USB flash drive is inserted in the front USB port.

Use the `Print PDF/TIFF` menus to specify the document stored in the root, file, or folder in a USB flash drive. See "Print Settings."

To display the `Print PDF/TIFF` job menu, press the (**Home**) button, tap , and then select the `Print PDF/TIFF` tile.

Print JPEG

NOTE:

- Print JPEG feature is available only when a USB flash drive is inserted in the front USB port.

Use the `Print JPEG` menus to specify the photos stored in the root, file, or folder in a USB flash drive. See "Print Settings."

To display the `Print JPEG` job menu, press the (**Home**) button, tap , and then select the `Print JPEG` tile.

Print PDF/TIFF / Print JPEG >

Print Settings

Use the print settings to configure various settings for the print function when using `Print PDF/TIFF`, `Print JPEG`.

Print PDF/TIFF / Print JPEG > **Print Settings >**

Quantity

Specifies the number of copies from 1 to 99.

Print PDF/TIFF / Print JPEG > **Print Settings >**

Output Color

Selects color or black and white printing.

Print PDF/TIFF / Print JPEG > **Print Settings >**

Select Tray

Specifies the input tray.

MPF		The paper is fed from the Multipurpose Feeder (MPF). When `Use Printer Driver Settings` is set in `MPF Configuration` of `Tray Settings`, `Any` is displayed for `Size` and `Type`. If you start the print job with `Any` as the paper size and type, `A4` or `Letter` is selected as the paper size and `plain` is selected as the paper type. If you want to specify the size and type of paper in the MPF, select `MPF` and specify the paper size and type.
	Size	Specifies the paper size.
Tray1		
Tray2*		

* This item is available only when the optional 550-sheet feeder is installed.

Print PDF/TIFF / Print JPEG > **Print Settings >**

2 Sided Printing

Specifies whether to print on one side or both sides of a sheet of print media. For a two-sided printing, you can specify the printout to be bound by the long edge or short edge.

Print PDF/TIFF / Print JPEG > **Print Settings >**

Layout

Specifies the output layout. Select whether to print one, two, or four pages on one side of a sheet of print media. If you select **`Off (No Scaling)`**, the parts that do not fit are not printed (print size is not adjusted automatically).

Print PDF/TIFF / Print JPEG > **Print Settings >**

Image Types

Sets the print image quality.

Auto	Prints PDF/TIFF files in the Text mode and JPEG files in the Photos (Standard Quality) mode.
Photos (Standard Quality)	Prints the photographic images at the standard quality.
Photos (High Quality)	Prints the photographic images at the high quality.

Text	Prints the text document at the standard quality.

Print PDF/TIFF / Print JPEG > **Print Settings >**

Collation

Specifies whether to sort the job.

Print PDF/TIFF > **Print Settings >**

PDF Password

Enters the password when you print a PDF file secured with password to open the PDF file.

Print PDF/TIFF / Print JPEG >

Save Settings

Use the save settings to save a variety of USB Direct Print features. And also use to create and edit custom tiles for USB Direct Print.

Dell Document Hub

Use the Dell Document Hub menus to configure various settings for Dell Document Hub.

To display the `Dell Document Hub` job menu, press the (**Home**) button, and then tap the `Dell Document Hub` tile.

NOTE:

- Dell Document Hub is available on Dell H625cdw and Dell H825cdw.

Dell Document Hub >

Search for Files

Searches the files saved in the cloud services, and print them from the printer.

Text Box	Enters the keywords, such as the words including the file name.
	Sorts the searching results by selecting the sorting order.
	Sets the settings of the Print Settings.
	Displays the selected files. The first three pages of each file are displayed in the small previews.

Dell Document Hub >

Browse for Files

Browses and prints the files saved in the selected cloud services.

Text Box	Enters the keywords, such as the words including the file name.
	Searches for the files in the current location or the selected cloud services.
	Sets the settings of the Print Settings.
	Displays the selected files. The first three pages of each file are displayed in the small previews.
	Sorts the searching results by selecting the sorting order.
	Saves the settings of the Print Settings as Favorite.

Dell Document Hub >

Scan

Scans the document and saves the scanned data in the cloud service.

File Name	Enters the file name you want to use.
File Format	Selects the file format from the list to save the scanned data.
Tag	Enters the tag you want to use.
	Searches for the location to save the scanned data. You can search for the location across the cloud services.
	Sets the settings of the Scan Settings.
	Sorts the searching results by selecting the sorting order.
	Saves the settings of the Scan Settings as Favorite.

Dell Document Hub > **Scan >**

PDF Password

Enters the password when you print a PDF file secured with password to open the PDF file.

Dell Document Hub > **Scan >**

File Name Option

Specifies the way to name the scanned data.

Off		
Add Prefix		Adds texts in front of the file name.
	Prefix/Suffix String	Specifies the texts that are added when `Add Prefix` is selected.
Add Suffix		Adds texts after the file name.
	Prefix/Suffix String	Specifies the texts that are added when `Add Suffix` is selected.

For details about other settings, see "Scan Settings."

Dell Document Hub >

Smart OCR Scan

Scans the document using Optical Character Recognition (OCR) and saves it in the cloud service.

File Name	Enters the file name you want to use.
File Format	Selects the file format from the list to save the scanned data.
Tag	Enters the tag you want to use.
	Searches for the location to save the scanned data. You can search for the location across the cloud services.
	Sets the settings of the Scan Settings.
	Saves the settings of the Scan Settings as Favorite.

Dell Document Hub > **Smart OCR Scan >**

File Format

Specifies the file format to save the scanned data.

Dell Document Hub > **Smart OCR Scan >**

OCR Language

Specifies the language for the OCR.

Dell Document Hub > **Smart OCR Scan >**

PDF Password

Enters the password when you print a PDF file secured with password to open the PDF file.

Dell Document Hub > **Smart OCR Scan >**

Blank Page Removable

Specifies whether to enable the Blank Page Removable feature, which removes the blank pages.

Dell Document Hub > **Smart OCR Scan >**

Image Enhancement

Sets whether to enable the Image Enhancement feature.

Dell Document Hub > **Smart OCR Scan >**

File Name Option

Specifies the way to name the scanned data.

Off		
Add Prefix		Adds texts in front of the file name.
	Prefix/Suffix String	Specifies the texts that are added when `Add Prefix` is selected.
Add Suffix		Adds texts after the file name.
	Prefix/Suffix String	Specifies the texts that are added when `Add Suffix` is selected.

For details about other settings, see "Scan Settings."

Dell Document Hub >

E-mail Me

Scans the document and send to you as an attached file of an e-mail.

File Format	Selects the file format from the list to save the scanned data.
Subject	Enters the subject you want to use.
	Sets the settings of the Scan Settings.
	Saves the settings of the Scan Settings as Favorite.

Dell Document Hub > **E-mail Me >**

File Format

Specifies the file format to save the scanned data.

Dell Document Hub > **E-mail Me >**

OCR Language

Specifies the language for the OCR.

Dell Document Hub > **E-mail Me >**

PDF Password

Enters the password when you print a PDF file secured with password to open the PDF file.

Dell Document Hub > **E-mail Me >**

Black Page Removable

Specifies whether to enable the `Black Page Removable` feature, which removes the blank pages. For details about other settings, see "Scan Settings."

Dell Document Hub >

Business Card Reader

Scans the business card and send vCard format data to you as an attached file of an e-mail.

Subject	Enters the subject you want to use.
	Sets the settings of the Scan Settings.
	Saves the settings of the Scan Settings as Favorite.

Dell Document Hub > **Business Card Reader >**

File Format

Specifies the file format to save the scanned data.

Dell Document Hub > **Business Card Reader >**

OCR Language

Specifies the language for the OCR.

Add App

Use the `Add App` menus to add a variety of tiles on the `Home` screen.

Dell™ Printer Configuration Web Tool

Use the Dell Printer Configuration Web Tool to monitor the status of your network printer without leaving your desk. You can view and/or change the printer settings, monitor toner level, and acknowledge the timing of ordering replacement consumables.

If you are a network administrator, you can copy the printer settings to one or all printers on the network using your web browser.

NOTE:

- This web tool is available only when the printer is connected to a network.

Preparing to Use the Dell Printer Configuration Web Tool

Make sure that you activate JavaScript in your browser before using the Dell Printer Configuration Web Tool.

Perform the following procedure to configure both the environment settings of your web browser and the operator panel before using the Dell Printer Configuration Web Tool.

NOTE:

- The Dell Printer Configuration Web Tool pages may be displayed with unreadable characters if the pages were configured by the language different from the language of your web browser.

Setting Up Internet Explorer®

Setting Up the Display Language

1. Select **Internet Options** from **Tools** on the menu bar.
2. Select **Languages** in the **General** tab.
3. Specify the display language in order of preference in the **Language** list.

Setting the IP Address of the Printer to Non-Proxy

1. Select **Internet Options** from **Tools** on the menu bar.
2. Click **LAN Settings** under **Local Area Network (LAN) Settings** in the **Connections** tab.
3. Perform either of the following:
   - Clear the **Use a proxy server for your LAN** check box under **Proxy server**.
   - Click **Advanced**, and then specify the IP address of the printer in the **Do not use proxy server for addresses beginning with** text box under **Exceptions**.

Confirming the Menu on the Operator Panel

You can start the Dell Printer Configuration Web Tool only when `Dell Printer Configuration Web Tool` is set to `Enable` on the operator panel. Check the operator panel setting if you cannot start the Dell Printer Configuration Web Tool. See "Protocols."

Starting the Dell Printer Configuration Web Tool

To start the Dell Printer Configuration Web Tool, enter the IP address of the printer in your web browser.

If you do not know the IP address of the printer, verify the IP address by using the operator panel, printing the system settings report, or using the ping command. See "Verifying the IP Settings."

Page Display Format

Top Frame

The top frame is located at the top of all pages. When the Dell Printer Configuration Web Tool is activated, the current status and specifications of the printer are displayed in the top frame on every page.

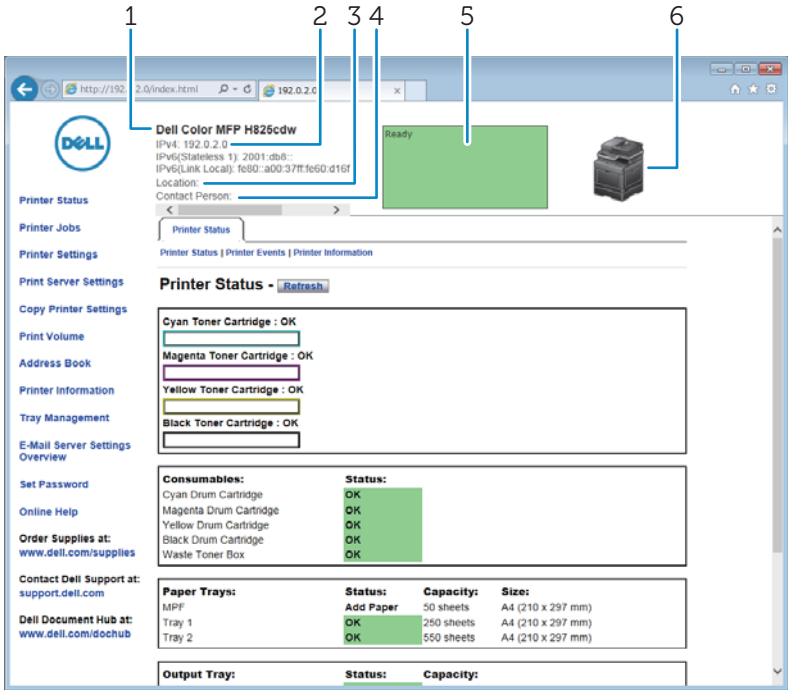

1	**Model Name**	Displays the model name of the printer.
2	**IPv4**	Displays the IP address of the printer.
	IPv6	
3	**Location**	Displays location of the printer. The location can be changed in the **Basic Information** section on the **Print Server Settings** page.
4	**Contact Person**	Displays the name of the printer administrator. The name can be changed in the **Basic Information** section on the **Print Server Settings** page.
5	**Event Panel**	Displays the indicator for the condition of the printer.
6	**Machine image**	Shows the bitmap image of the printer. The **Printer Status** menu appears in the right frame when you click on the image.

Left Frame

The left frame is located on the left side of all the pages. The menu titles displayed in the left frame are linked to corresponding menus and pages. You can proceed to the corresponding page by clicking their characters.

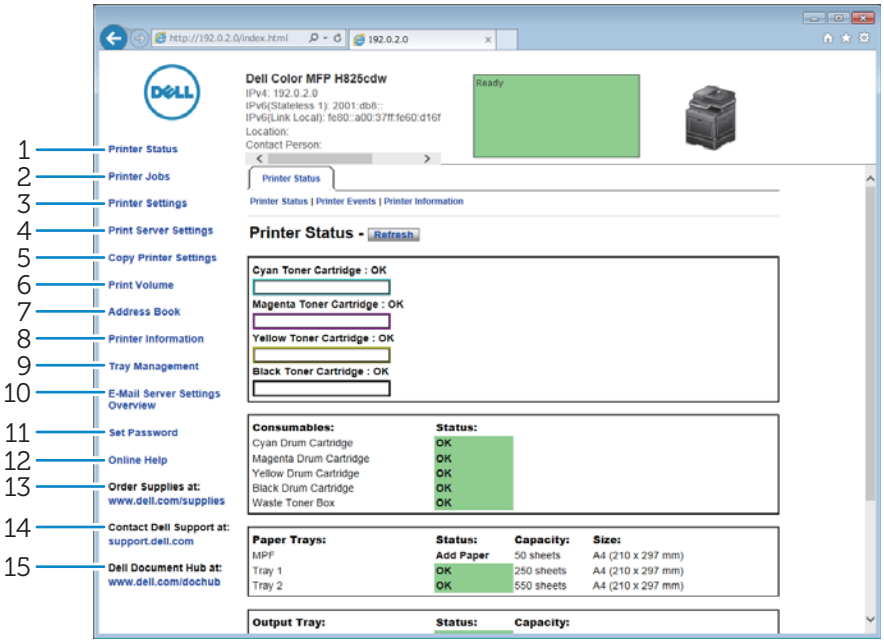

1	**Printer Status**	Provides immediate feedback on the printer supply status. When a toner cartridge is running low, click the order supplies link on the first screen to order a new toner cartridge.
2	**Printer Jobs**	Contains information on the details of the status regarding each protocol or job.
3	**Printer Settings**	Displays the printer settings of the operator panel to configure the settings from the Dell Printer Configuration Web Tool.
4	**Print Server Settings**	Configures the type of printer interface and the necessary conditions for communications.
5	**Copy Printer Settings**	Copies the printer settings to another printer or printers on the network. **NOTE:** • You must log in as an administrator to use this setting.
6	**Print Volume**	Displays the printing history such as paper usage and restrictions of color mode usage.
7	**Address Book**	Displays or edits the e-mail address, server address, and fax number entries in the Address Book, or registers new entries. **NOTE:** • You must log in as an administrator to use this setting.
8	**Printer Information**	Provides information on service calls, inventory reports, or the status of current memory and engine code levels.
9	**Tray Management**	Provides information about the paper type and size for each tray.
10	**E-Mail Server Settings Overview**	Opens the **E-Mail Server** menu in the **Printer Server Settings** menu to configure E-Mail Server settings for Scan to Email, e-mail alert and forwarding fax to email features.

11	**Set Password**	Locks the Dell Printer Configuration Web Tool with a password so that the printer settings are not changed inadvertently. **NOTE:** • You must log in as an administrator to use this setting.
12	**Online Help**	Links to the Dell Support website.
13	**Order Supplies at:**	Links to the Dell website for ordering supplies.
14	**Contact Dell Support at:**	Links to the Dell Support website.
15	**Dell Document Hub at:***	Links to the Dell Document Hub website.

* This is available on Dell H625cdw and Dell H825cdw.

Right Frame

The right frame is located on the right side of all the pages. The contents of the right frame correspond to the menu that you select in the left frame. See "Details of the Menu Items."

Buttons in the Right Frame

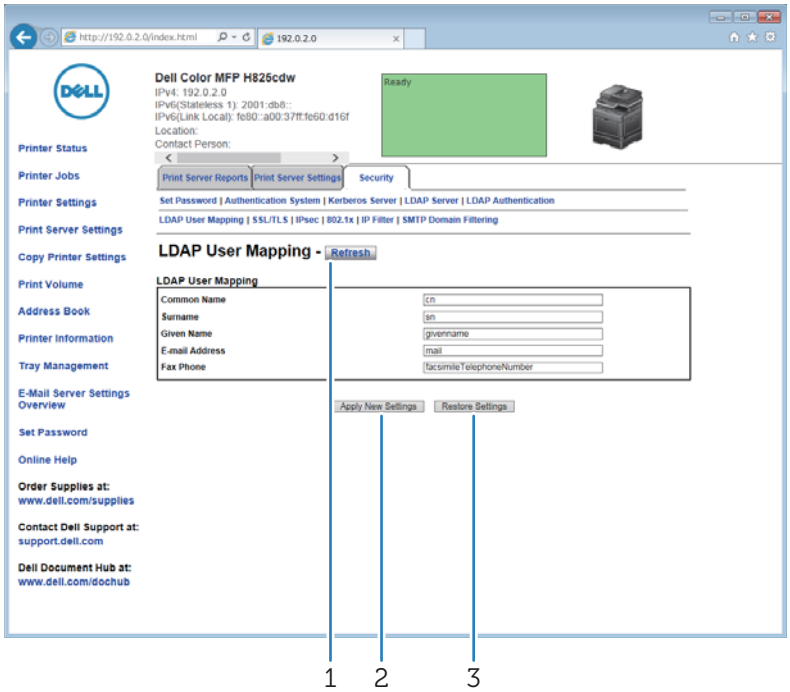

1	**Refresh** Button	Receives the current printer configuration and updates the latest information in the right frame.
2	**Apply New Settings** Button	Submits new settings made on the Dell Printer Configuration Web Tool to the printer. The new settings replace the old settings of the printer.
3	**Restore Settings** Button	Restores the old settings that existed before any changes were made. New settings are not submitted to the printer.

Changing the Settings of the Menu Items

Some menus allow you to change the printer settings through the Dell Printer Configuration Web Tool. When you access these menus, the authentication window appears on the screen. Enter a user name and password for the printer administrator by

following the prompts displayed in the dialog box.

The default user name is admin, and the default password is left blank (NULL). You can change only the password in the **Set Password** page in the **Security** menu. The user name cannot be changed. See "Set Password."

Details of the Menu Items

Left Frame	Tab	Menu Item
"Printer Status"	"Printer Status"	"Printer Status"
		"Printer Events"
		"Printer Information"
"Printer Jobs"	"Printer Jobs"	"Job List"
		"Completed Jobs"
"Printer Settings"	"Printer Settings Report"	"Menu Settings"
		"Reports"
	"Printer Settings"	"System Settings"
		"Network Settings"
		"USB Settings"
		"PCL Settings"
		"PS Settings"
		"PDF Settings"
		"Secure Settings"
		"Copy Defaults"
		"Copy Color Balance"
		"Copy Settings"
		"Fax Defaults"
		"Fax Settings"
		"Scan Defaults"
		"Direct Print Defaults / USB Direct Print Defaults"
		"MIFARE Customized Card"
	"Printer Maintenance"	"Paper Density"
		"Adjust Transfer Belt Unit"
		"Adjust 2nd BTR"
		"Adjust Fusing Unit"
		"Color Registration Adjustments"
		"Clean Developer"
		"Reset Defaults"
		"Initialize Print Meter"
		"Clear Stored Jobs"[*1]
		"Non-Dell Toner"
		"Adjust Altitude"
		"Decrease Ghosting"
		"Clock Settings"
		"Web Link Customization"
"Print Server Settings"	"Print Server Reports"	"Print Server Setup Page"

Left Frame	Tab	Menu Item
		"E-Mail Server Setup Page"
	"Print Server Settings"	"Basic Information"
		"Port Settings"
		"TCP/IP"
		"SMB"
		"E-Mail Server"
		"Bonjour (mDNS)"
		"SNMP"
		"Scan to Network Folder"
		"SNTP"
		"AirPrint"
		"Mopria"
		”Google Cloud Print”
		"Dell Document Hub"[*5]
		"Proxy Server"
		"Wi-Fi"[*2]
		"Wi-Fi Direct"[*4]
		"Reset Print Server"
	"Security"	"Set Password"
		"Authentication System"
		"Kerberos Server"
		"LDAP Server"
		"LDAP Authentication"
		"LDAP User Mapping"
		"SSL/TLS"
		"IPsec"
		"802.1x"[*3]
		"IP Filter"
		"SMTP Domain Filtering"
"Copy Printer Settings"	"Copy Printer Settings"	"Copy Printer Settings"
		"Copy Printer Settings Report"
"Print Volume"	"Print Volume"	"Print Volume"
		"Dell ColorTrack"
"Address Book"	"E-Mail Address"	"E-Mail Address"
		"E-Mail Group"
		"Default Setup"
	"Server Address"	"Server Address"
	"Phone Book"	"FAX Speed Dial"
		"FAX Group"
"Tray Management"	"Tray Management"	

[*1] This item is available only when **RAM Disk** is enabled.

[*2] This item is available only when the printer is connected using the wireless network.
Wireless network is available on Dell H625cdw and Dell H825cdw.

[*3] This item is available only when the printer is connected using an Ethernet cable.

*4 Wi-Fi Direct is available on Dell H625cdw and Dell H825cdw.

*5 Dell Document Hub is available on Dell H625cdw and Dell H825cdw.

Printer Status

Use the **Printer Status** menu to check the status of consumables, hardware, and specifications of the printer.

Printer Status

The **Printer Status** tab includes the **Printer Status**, **Printer Events** and **Printer Information** pages.

Printer Status

Displays the status of the consumables, trays, and covers.

Cyan Toner Cartridge			Indicates whether the toner, drum cartridge and/or waste toner box is OK for use, or the toner, drum cartridge and/or waste toner box needs to be replaced soon or now.
Magenta Toner Cartridge			
Yellow Toner Cartridge			
Black Toner Cartridge			
Consumables			
Cyan Drum Cartridge			
Magenta Drum Cartridge			
Yellow Drum Cartridge			
Black Drum Cartridge			
Waste Toner Box			
Paper Trays	**Status**	**OK**	Indicates that there is some paper in the tray but the quantity is unknown.
		Add Paper	Indicates that there is no paper in the tray.
	Capacity		Displays the maximum capacity of the paper tray.
	Size		Displays the size of paper in the tray.
Output Tray	**Status**		Indicates that the tray is available when **OK** is displayed.
	Capacity		Displays the maximum capacity of the paper tray.
Cover	**Status**		Indicates whether the cover is closed or open.
Printer Type			**Color Laser** is displayed normally.
Printing Speed			

Printer Events

When faults occur, the details of all alerts or indications of faults are displayed in the **Printer Events** page.

Printer Information

Displays the printer details such as the hardware version and Service Tag Number. This page can also be displayed by clicking **Printer Information** in the left frame.

Printer Jobs

The **Printer Jobs** menu contains information on the **Job List** and **Completed Jobs** pages. These pages show the details of the status regarding each protocol or job.

Printer Jobs

The **Printer Jobs** tab includes the **Job List** and **Completed Jobs** pages.

Job List

Displays the jobs that are being processed. Click the **Refresh** button to update the screen.

ID	Displays the job ID.
Job Name	Displays the file name of the job being processed.
Owner	Displays the name of the job owner.
Host Name	Displays the name of the host computer.
Job Status	
Job Type	
Host I/F	Displays the status of the host interface.
Job Submitted Time	Displays the date when the job was submitted.

Completed Jobs

Displays the completed jobs. Up to the last 20 jobs are displayed. Click the **Refresh** button to update the screen.

Clear Job History	Deletes job history.
ID	Displays the job ID.
Job Name	Displays the file name of the completed job.
Owner	Displays the name of the job owner.
Host Name	Displays the name of the host computer.
Output Result	Displays the status of the completed job.
Job Type	
Impression Number	Displays the total number of pages for the job.
No. of Sheets	Displays the total number of sheets for the job.
Host I/F	Displays the status of the host interface.
Job Submitted Time	Displays the date when the job was submitted.

Printer Settings

Use the **Printer Settings** menu to display the **Printer Settings Report**, **Printer Settings**, and **Printer Maintenance** tabs and to configure the printer settings.

Printer Settings Report

The **Printer Settings Report** tab includes the **Menu Settings** and **Reports** pages.

Menu Settings

Displays the current settings of the printer menus.

Reports

Prints various types of reports and lists. Click **Start** to print each report.

System Settings
Panel Settings
PCL Fonts List
PCL Macros List
PS Fonts List
PDF Fonts List
Job History
Error History
Print Meter
Color Test Page
Protocol Monitor
Speed Dial
Address Book
Server Address
Fax Activity
Fax Pending
Stored Documents*

* This item is available only when **RAM Disk** is enabled.

Printer Settings

The **Printer Settings** tab includes **System Settings**, **Network Settings**, **USB Settings**, **PCL Settings**, **PS Settings**, **PDF Settings**, **Secure Settings**, **Copy Defaults**, **Copy Color Balance**, **Copy Settings**, **Fax Defaults**, **Fax Settings**, **Scan Defaults**, **Direct Print Defaults**/**USB Direct Print Defaults**, and **MIFARE Customized Card** pages.

System Settings

Configures the basic printer settings.

Power Saver Time - Sleep	Sets the time taken by the printer to enter Sleep mode after it finishes a job.
Power Saver Time - Deep Sleep	Sets the time taken by the printer to enter Deep Sleep mode after it has entered Sleep mode.
Power Saver Time - Power Off Timer*1	Sets the time taken by the printer to enter Power Off mode after it has entered Deep Sleep mode.
mm / inch	Sets the measurement unit to be used on the touch panel as either mm or inches.
Screen Brightness	Sets the brightness level of the touch panel.
Control Panel Tone	Sets the volume of the tone that is emitted when the operator panel input is correct, or disables the tone.
Invalid Key Tone	Sets the volume of the tone that is emitted when the operator panel input is incorrect, or disables the tone.

Machine Ready Tone	Sets the volume of the tone that is emitted when the printer becomes ready, or disables the tone.
Copy Completed Tone	Sets the volume of the tone that is emitted when a copy job is complete, or disables the tone.
Job Completed Tone	Sets the volume of the tone that is emitted when a job other than a copy job is complete, or disables the tone.
Fault Tone	Sets the volume of the tone that is emitted when a job ends abnormally, or disables the tone.
Alert Tone	Sets the volume of the tone that is emitted when a problem occurs, or disables the tone.
Out of Paper Tone	Sets the volume of the tone that is emitted when the printer runs out of paper, or disables the tone.
Low Toner Alert Tone	Sets the volume of the tone that is emitted when the toner is low, or disables the tone.
Auto Clear Alert Tone	Sets the volume of the tone that is emitted 5 seconds before the printer performs auto clear, or disables the tone.
NFC Authentication Tone[*1]	Sets the volume of the tone that is emitted when an NFC card is placed on the NFC reader for authentication, or disables the tone.
All Tones	Sets the volume of all the alert tones, or disables all the tones.
Low Toner Alert Message	Alerts you if the toner is low.
OffHook Wake Up	Sets whether to wake up from Sleep or Deep Sleep mode when you pick up the handset of the external telephone.
Auto Log Print	Sets if a job history needs to be printed after every 20 jobs.
RAM Disk	Sets whether to allocate RAM for the file system for the Secure Print, Proof Print, Private Mail Box Print, and Public Mail Box Print features.
Panel Language	Used to set the language on the touch panel.
Max E-mail Size	Sets the maximum size of e-mail that can be sent.
Auto Reset	Sets the amount of time before the printer automatically resets its settings to the defaults when no additional settings are made.
Fault Time-out	Sets the amount of time the printer waits before canceling a job that stops abnormally.
Default Paper Size	Sets the default print paper size.
Print ID	Sets where to print the user ID on the output paper.
Print Text	Sets whether the printer outputs Page Description Language (PDL) data which is not supported by the printer as text when the printer receives it.
Banner Sheet Insert Position	Sets where to insert a banner sheet in the output.
Banner Sheet Specify Tray	Sets from which tray a banner sheet is fed.
Substitute Tray	Sets whether to use another size paper when the paper that is loaded in the specified tray does not match the paper size settings for the current job.
Letterhead 2 Sided	Sets whether to print on both sides of letterhead.
A4<>Letter Switch	Sets whether to print A4 size jobs on Letter size paper if A4 is not available in the paper trays and vice versa.
A5<>Statement Switch	Sets whether to print A5 size jobs on Statement size paper if A5 is not available in the paper trays and vice versa.
Report 2 Sided Print	Sets whether to print reports on both sides a sheet of paper.
Use Another Tray	Sets whether to show a message to select another tray when the specified paper is not available in the paper tray.

Resume Printing After Jam Recovery[*2]	Sets whether to delete print job after recovering from paper jam.
Tap To Print	Sets whether to add the printer to a mobile device such as a tablet or a notebook computer by tapping the device to the ((NFC)) (**NFC**) reader.

[*1] This is available on Dell H625cdw and Dell H825cdw.

[*2] This setting does not affect fax job.

Network Settings

Specifies the PostScript Level3 Compatible communication protocol for the printer.

PS Data Format	Sets PostScript Level3 Compatible communication protocol for each interface.

USB Settings

Specifies USB settings of the printer.

USB Port	Sets whether to enable the USB interface on the printer.
PS Data Format	Sets PostScript Level3 Compatible communication protocol for each interface.
Job Time-out	Sets the amount of time the printer waits for data to arrive from the computer.

PCL Settings

Specifies the Printer Control Language (PCL) settings.

Paper Tray	Sets the paper input tray.
Paper Size	Sets the paper size.
Custom Paper Size - Y	Sets the length of custom size paper.
Custom Paper Size - X	Sets the width of custom size paper.
Orientation	Sets how text and graphics are oriented on the page.
2 Sided Print	Sets duplex setting as the default for all print jobs.
Font	Sets the font from the list of registered fonts.
Symbol Set	Sets a symbol set for the specified font.
Font Size	Sets the font size for scalable typographic fonts.
Font Pitch	Sets the font pitch for scalable mono spaced fonts.
Form Line	Sets the number of lines in a page.
Quantity	Sets the number of copies to print.
Image Enhance	Sets whether to enable the Image Enhancement feature.
Hex Dump	Sets whether to help isolate the source of a print job problem. With Hex Dump selected, all data sent to the printer is printed in hexadecimal and character representation. Control codes are not executed.
Draft Mode	Sets whether to print in the draft mode.
Line Termination	Sets how to handle line terminations.
Default Color	Sets the print color mode as **Color** or **Black**. This setting is used for print jobs without a specified color print mode.
Ignore Form Feed	Sets whether to ignore blank pages that only contain Form Feed control codes.

PS Settings

Specifies printer settings that only affect jobs using the PostScript Level3 Compatible emulation printer language.

PS Error Report	Sets whether the contents of the errors concerning PostScript Level3 Compatible page description language are printed.
PS Job Time-out	Sets the execution time for one PostScript Level3 Compatible job.
Paper Select Mode	Sets the way to select the tray for the PostScript Level3 Compatible mode.
Default Color	Sets the default color mode for the PostScript Level3 Compatible mode.

PDF Settings

Specifies the PDF settings.

Quantity	
2 Sided Print	Sets whether to print on both sides of a sheet of paper.
Print Mode	
PDF Password	Sets a password.
Re-enter PDF Password	Confirms the set password.
Collation	Sets whether to sort the output.
Output Size	
Layout	
Default Color	
Detect Job Separator	Sets whether to detect the end of the job in printing PDF files successively from the USB memory.

Secure Settings

Panel Lock

Sets a limited access to `Admin Settings` with a password, and to set or change the password.

Panel Lock Control*	Sets whether to enable/disable password protection for the `Admin Settings`.
New Password	Sets a password that is required to access the `Admin Settings`.
Re-enter Password	Confirms the set password.

* Some setting items in the Secure Settings are displayed only when this setting item is enabled.

NOTE:

- You can set the password for the Dell Printer Configuration Web Tool from **Set Password** in **Print Server Settings**.

Functions Control

Specifies whether to lock the Copy, Scan, Fax, and Print functions with a password, and to set or change the password.

Copy	Sets whether to lock the Copy function with a password.
Scan to E-mail	Sets whether to lock the Scan to Email feature with a password.
Fax	Sets whether to lock the Fax function with a password.
Fax Driver	Sets whether to enable or disable the Fax Driver function.

Scan to Network Folder	Sets whether to lock the Scan to Network Folder feature with a password.
Scan to Computer	Sets whether to lock the Scan to Computer feature with a password.
PC Scan	Sets whether to lock the PC Scan feature with a password.
Scan to USB	Sets whether to lock the Scan to USB feature with a password.
USB Direct Print	Sets whether to lock the USB Direct Print feature with a password.
ID Copy	Sets whether to enable or disable the ID Copy feature.
USB Service - Show When Inserted	Sets whether to show the `USB Drive Detected` screen when a USB flash drive is inserted into the printer.
Automatic Document Detected Menu	Sets whether to enable or disable to detect document loaded in the DADF and show DADF related menus on the touch panel.
New Password	Sets a password that is required to access the Copy, Scan, Fax, and Print functions.
Re-enter Password	Confirms the set password.

NOTE:

- You can set the password for the Dell Printer Configuration Web Tool from **Set Password** in **Print Server Settings**.

Secure Receive

Allows you to password protect all the incoming faxes. When the Secure Receive feature is enabled, the printer stores incoming faxes and prints them when the correct password is entered on the touch panel.

Secure Receive Set	Sets whether to enable/disable password protection for all incoming faxes.
New Password	Sets a password for incoming faxes.
Re-enter Password	Confirms the set password.

NOTE:

- You can set the password for the Dell Printer Configuration Web Tool from **Set Password** in **Print Server Settings**.

Desktop Login

Select the user authentication method from either local authentication or remote authentication. To use the remote authentication method, the LDAP server or the Kerberos server is required to authenticate the user.

NOTE:

- This is available on Dell S2825cdn.

Desktop Authentication	Sets the authentication method.
Authentication System	Click to display the **Authentication System** page and to specify the authentication system settings.
User Login History	Select the check box to enable the User Login History feature.

Edit E-mail From Fields

Sets whether to enable editing of the transmission source when you use the Scan to Email feature.

Reconfirm Recipients

Sets whether to reconfirm before sending fax or scan jobs.

Software Download

Sets whether to enable download of firmware updates.

Display of Network Information

Sets whether to show network information in the message field of the `Home` screen.

Login Error

Specifies how many times an administrator can attempt to log in to **Panel Lock**, **Functions Control**, and **Secure Receive**.

Login Error	Displays how many times an administrator can attempt to log in to **Panel Lock**, **Functions Control**, and **Secure Receive**.

NFC Authentication

Sets whether to enable the authentication using the NFC authentication card.

NOTE:

- This is available on Dell H625cdw and Dell H825cdw.

Set Available Time - Copy/Scan/Fax/Print

Specifies the time to enable the secure setting for the Copy, Scan, Fax, and Print functions.

Set Available Time
Start Time
End Time
Recurrence

Secure Job Expiration

NOTE:

- Secure Job Expiration feature is available only when **RAM Disk** is enabled.

Specifies the date and time to delete the files stored as Secure Print in the RAM disk.

Expiration Mode	Allows you to set the date to delete the files stored as Secure Print in the RAM disk.
Expiration Time	Sets the time to delete the files stored as Secure Print in the RAM disk.
Recurrence	Sets the period to repeat the setting.
Weekly Settings	Sets the day of the week to repeat the setting.
Monthly Settings	Sets the day of the month to repeat the setting.

Copy Defaults

Creates your own default Copy settings.

Output Color	Sets whether to print in color or in black and white.
Select Tray	Sets the default input tray.
Collation	Sets whether to sort a copy job.
Reduce/Enlarge	Sets the default reduction/enlargement ratio.
Custom Reduce/Enlarge	Sets the custom reduction/enlargement ratio.
Original Size	Sets the document paper size.
Original Type	Sets the document paper type.
Darken/Lighten	Sets the default copy density.
Sharpness	Sets the default sharpness level.
Color Saturation	Adjusts the saturation of colors to make the colors lighter or darker.
Auto Exposure	Sets whether to suppress the background to enhance text on the copy.

Auto Exposure Level	Sets the background suppression level.

Copy Color Balance

Specifies the copy color balance.

Copy Settings

Configures the Copy settings.

2 Sided Copying		Sets whether to print on both sides of a sheet of paper.
Binding of Original		Sets the binding position for the two-sided copying.
2-Up	**Off**	Does not perform multiple-up printing.
	Auto	Automatically reduces to fit onto one sheet of paper.
	Manual	Specify the reduce/enlarge ratio in **Reduce/Enlarge**.
Margin Top/Bottom		Sets the value of the top and bottom margins.
Margin Left/Right		Sets the value of the left and right margins.
Margin Middle		Sets the value of the middle margin.

Fax Defaults

Creates your own default Fax settings.

Resolution	**Standard**	Suitable for documents with normal sized characters.
	Fine	Suitable for documents containing small characters or thin lines or documents printed using a dot-matrix printer.
	Super Fine	Suitable for documents containing extremely fine detail. The super fine mode is enabled only if the remote machine also supports the Super Fine resolution.
	Photo	Suitable for documents containing photographic images.
2 Sided Scanning		Sets whether to scan both sides of a document.
Binding of Original		Sets the binding position for the two-sided scanning.
Darken/Lighten		Sets the default density to fax your documents lighter or darker.
Delayed Send		Sets the fax transmission start time when sending a fax at a specified time.

Fax Settings

Configures the Fax settings.

NOTE:

- You cannot set up the items on the **Fax Settings** page unless you set up the country code under **Country**.

Fax Number	Allows you to enter the fax number of the printer to be printed on the header of faxes.
Country	Sets the country where the printer is used.
Fax Header Name	Allows you to enter a name to be printed on the header of faxes.
Line Type	Sets the default line type; Public Switched Telephone Network (PSTN) or Private Branch Exchange (PBX).

Line Monitor		Sets the volume of the line monitor, which audibly monitors a transmission through the internal speaker until a connection is made.
DRPD Pattern		Sets the Distinctive Ring Pattern Detection (DRPD) setting from **Pattern1** to **Pattern7**. DRPD is a service provided by some telephone companies.
Receive Mode	**Telephone**	Automatic fax reception is turned off. You can receive a fax by picking up the handset of the external telephone and then pressing a remote receive code, or by tapping `Manual Receive` in `On Hook` and then tapping `Receive`. For details about `Manual Receive`, see "Receiving a Fax Manually."
	Fax	Automatically receives faxes.
	Telephone/Fax	When the printer receives an incoming fax, the external telephone rings for the time specified in **Auto Receive Tel/Fax**, and then the printer receives a fax. If an incoming call is not a fax, the printer beeps from the internal speaker indicating that the call is a telephone call.
	Ans Machine/Fax	The printer can share a telephone line with an answering machine. In this mode, the printer monitors the fax signal and pick up the line if there are fax tones. If the telephone communication in your country is serial, this mode is not supported.
	DRPD	Before using the Distinctive Ring Pattern Detection (DRPD) option, a distinctive ring service must be installed on your telephone line by the telephone company. After the telephone company has provided a separate number for faxing with a distinctive ring pattern, configure the fax setup to monitor for that specific ring pattern.
Ring Tone Volume		Sets the volume of the ring tone, which indicates that an incoming call is a telephone call through the internal speaker when **Receive Mode** is set to **Telephone/Fax**.
Auto Receive Fax		Sets the interval at which the printer goes into the fax receive mode after answering an incoming call.
Auto Receive Tel/Fax		Sets the interval at which the printer goes into the fax receive mode after the external telephone receives an incoming call.
Auto Receive Answer/Fax		Sets the interval at which the printer goes into the fax receive mode after the external answering machine receives an incoming call.
Junk Fax Setup		Sets whether to reject unwanted faxes by accepting only the faxes from the numbers registered in the Phone Book.
2 Sided Printing		Sets whether to print on both sides of a sheet of paper.
Remote Receive		Sets whether to receive a fax by pressing a remote receive code on the external telephone.
Remote Receive Tone		Sets a 2-digit remote receive code when **Remote Receive** is **On**.
Discard Size		Sets whether to delete text or images at the bottom of a fax page when the entire page does not fit onto the output paper. Selecting **Auto Reduction** automatically reduces the fax page to fit it onto the output paper, and does not discard any images or text at the bottom of the page.
Received Fax Forward		Sets your printer to forward incoming faxes to another fax number, to e-mail addresses, or to a server.
Forwarding Number		Allows you to enter the fax number of the destination to which incoming faxes are forwarded.
Forwarding E-mail Address 1		Allows you to enter the e-mail address to which incoming faxes are to be forwarded.
Forwarding E-mail Address 2		

Forwarding E-mail Address 3	
Forwarding E-mail Address 4	
Forwarding E-mail Address 5	
Server Type	Sets the server type.
Server Address	Sets the server address registered under the server ID.
Server Port Number	Sets the server port number.
Login Name	Sets the login name.
Login Password	Sets the login password.
Re-enter Password	Enter the password again to check it.
Share Name	Sets the shared name.
Server Path	Sets the server path.
Redial Attempts	Sets the number of redial attempts to make if the destination fax number is busy. If you enter 0, the printer does not redial.
Interval of Redial	Sets the interval between redial attempts.
Resend Delay	Sets the interval between re-send attempts.
Tone/Pulse	Sets whether to use tone or pulse dialing.
Prefix Dial	Sets whether to set a prefix dial number.
Prefix Dial Number	Sets a prefix dial number of up to five digits. This number dials before any auto dial number is started. It is useful for accessing the Private Automatic Branch Exchange (PABX).
Fax Cover Page	Sets whether to attach a cover page to faxes.
Fax Header	Sets whether to print the information of the sender on the header of faxes.
ECM	Sets whether to enable the Error Correction Mode (ECM). To use the ECM, the remote machines must also support the ECM.
Modem Speed	Allows you to adjust the fax modem speed when a fax transmission or reception error occurs.
Display Manual Fax Recipients	Sets whether to show the fax number of the recipient on the `Sending Fax` screen when manually sending a fax.
Fax Activity	Sets whether to automatically print a fax activity report after every 50 incoming and outgoing fax communications.
Fax Transmit	Sets whether to print a transmission report after every fax transmission or only when an error occurs.
Fax Broadcast	Sets whether to print a transmission report after every fax transmission to multiple destinations or only when an error occurs.
Fax Protocol	Sets whether to print the protocol monitor report after every fax transmission or only when an error occurs.

Scan Defaults

Creates your own default Scan settings.

File Format	Sets the file format in which scanned data is to be saved.
Output Color	Sets whether to scan in color or in black and white.
Resolution	Sets the default scan resolution.

Original Size	Sets the document paper size.
2 Sided Scanning	Sets whether to scan both sides of a document.
Binding of Original	Sets the binding position for the two-sided scanning.
Darken/Lighten	Sets the default scan density.
Sharpness	Sets the default sharpness level.
Contrast	Sets the default contrast level.
Auto Exposure	Sets whether to suppress the background to enhance text on the scanned data.
Auto Exposure Level	Sets the default background suppression level.
Margin Top/Bottom	Sets the value of the top and bottom margins.
Margin Left/Right	Sets the value of the left and right margins.
Margin Middle	Sets the value of the middle margin.
TIFF File Format	Sets the TIFF file format to TIFF V6 or TTN2.
Image Compression	Sets the image compression level.
File Naming Mode	Sets the detailed settings of **File Naming Mode** to **Auto**, **Add Prefix** or **Add Suffix**.
Prefix/Suffix String	Sets the texts that are added when **Add Prefix** or **Add Suffix** are selected.
Create Folder	Sets whether to create a folder when saving scanned data.

Direct Print Defaults / USB Direct Print Defaults

NOTE:

- For Dell H625cdw and Dell H825cdw, **Direct Print Defaults** is displayed. For Dell S2825cdn, **USB Direct Print Defaults** is displayed.

Creates your own **Direct Print Defaults** / **USB Direct Print Defaults** setting.

Output Color	Sets whether to print in color or in black and white.
Select Tray	Sets the default input tray.
2 Sided Printing	Sets whether to print on both sides of a sheet of paper.
Layout	Sets Displays the default paper layout when **Layout** is selected.
Image Types	Sets the print image quality when printing documents.
Collation	Sets whether to sort the output.
PDF Password	Sets a password.
Re-enter PDF Password	Confirms the set password.

MIFARE Customized Card

Registers SSFC formatted NFC ID cards.

User ID Block 1	Allows you to register the MIFARE Customized Card.
User ID Block 2	Allows you to register the MIFARE Customized Card.
User ID Block 3	Allows you to register the MIFARE Customized Card.

NOTE:

- This is available on Dell H625cdw and Dell H825cdw.

Printer Maintenance

The **Printer Maintenance** tab includes the **Paper Density**, **Adjust Transfer Belt Unit**, **Adjust 2nd BTR**, **Adjust Fusing Unit**, **Color Registration Adjustments**, **Clean Developer**,

Reset Defaults, **Initialize Print Meter**, **Clear Stored Jobs**, **Non-Dell Toner**, **Adjust Altitude**, **Decrease Ghosting**, **Clock Settings**, and **Web Link Customization** pages.

Paper Density

Specifies the paper density for the plain paper and labels.

Adjust Transfer Belt Unit

Adjusts the transfer bias when the faint image of the previous page, a part of the page currently printing, etc. appear on the output.

K Offset	If faint black colored ghosts appear, try to decrease the value.
YMC Offset	If faint ghosts in color (yellow, magenta, or cyan) appear, try to decrease the value.

Adjust 2nd BTR

Specifies the optimum voltage settings for printing for the 2nd Belt Transfer Roller (2nd BTR). To lower the voltage, set negative values. To increase, set positive values. If you see mottles on the print output, try to increase the voltage. If you see white spots on the print output, try to decrease the voltage.

NOTE:

- The print quality changes depending on the setting values you select for this item.

Plain(60-90g/m^2)	Sets the reference voltage setting for the transfer roller for each paper type.
Plain Thick(91-105g/m^2)	
Covers(106-176g/m^2)	
Covers Thick(177-220g/m^2)	
Coated(106-176g/m^2)	
Coated Thick(177-220g/m^2)	
Label	
Envelope	
Recycled	

Adjust Fusing Unit

Specifies the optimum temperature settings for printing for the fusing unit. To lower the temperature, set negative values. To increase, set positive values. When the printouts are curled, try to lower the temperature. When the toner does not fuse on the paper properly, try to increase the temperature.

NOTE:

- The print quality changes depending on the setting values you select for this item.

Plain(60-90g/m^2)	Sets the temperature settings for the fusing unit for each paper type.
Plain Thick(91-105g/m^2)	
Covers(106-176g/m^2)	
Covers Thick(177-220g/m^2)	
Coated(106-176g/m^2)	
Coated Thick(177-220g/m^2)	
Label	
Envelope	

Recycled	

Color Registration Adjustments

Specifies whether to automatically perform color registration adjustment.

Clean Developer

Stirs the developer in the drum cartridge.

Clean Developer	Click **Start** to stir the developer in the drum cartridge.
Toner Refresh	Expels the toner in the drum cartridge, and supplies the fresh toner from the toner cartridge.

Reset Defaults

Initializes the non-volatile (NV) memory. After executing this setting and restarting the printer, all the menu parameters are reset to their default values.

Reset Defaults User Fax Section and restart printer.	Click **Start** to reset the fax number entries in the Address Book.
Reset Defaults User Scan Section and restart printer.	Click **Start** to reset the e-mail and server address entries in the Address Book.
Reset Defaults User Account Section and restart printer.*	Click **Start** to reset the user account entries.
Reset Defaults User App Section and restart printer.*	Click **Start** to reset the user application entries.
Reset Defaults System Section and restart printer.	Click **Start** to reset the system parameters.
Power On Wizard	Click **Start** to perform the initial setup for the printer.

* This is available on Dell H625cdw and Dell H825cdw.

Initialize Print Meter

Initializes the print meter of the printer. When the print meter is initialized, the meter count is reset to 0.

Clear Stored Jobs

NOTE:

- Clear Stored Jobs feature is available only when **RAM Disk** is enabled.

Clears all files stored in the RAM disk.

All	Click **Start** to clear all files stored as Secure Print, Proof Print, Private Mail Box Print, and Public Mail Box Print in the RAM disk.

Secure Document	Click **Start** to clear all files stored as Secure Print, Proof Print, Private Mail Box Print, and Public Mail Box Print in the RAM disk.
Stored Document	Click **Start** to clear all files stored in the RAM disk.

Non-Dell Toner

Uses toner cartridge of another manufacturer.

CAUTION:

- **Using a non-Dell toner cartridge may severely damage the printer. The warranty does not cover damages caused by using non-Dell toner cartridges.**

Adjust Altitude

Specifies the altitude of the location where the printer is installed.

The discharge phenomenon for charging the photo conductor varies with barometric pressure. Adjustments are performed by specifying the altitude of the location where the printer is being used.

Decrease Ghosting

Reduces negative ghost.

Clock Settings

Specifies the clock settings.

Date Format
Time Format
Time Zone
Set Date
Set Time

Web Link Customization

Specifies a link used for ordering consumables, which can be accessed from **Order Supplies at:** in the left frame.

Select Reorder URL	Sets a URL to be linked to **Order Supplies at:**
Regular	Displays the regular URL (**http://accessories.us.dell.com/sna**) that can be linked to **Order Supplies at:**.
Premier	Displays the premier URL (**http://premier.dell.com**) that can be linked to **Order Supplies at:**.

Print Server Settings

Use the **Print Server Settings** menu to set the type of printer interface and the necessary conditions for communication.

Print Server Reports

The **Print Server Reports** tab includes the **Print Server Setup Page** and the **E-Mail Server Setup Page**.

Print Server Setup Page

Displays the current settings of the print server.

E-Mail Server Setup Page

Displays the current settings of the e-mail server.

Print Server Settings

The **Print Server Settings** tab includes the **Basic Information**, **Port Settings**, **TCP/IP**, **SMB**, **E-Mail Server**, **Bonjour (mDNS)**, **SNMP**, **Scan to Network Folder**, **SNTP**, **AirPrint**, **Mopria**, **Google Cloud Print**, **Dell Document Hub**, **Proxy Server**, **Wi-Fi**, **Wi-Fi Direct**, and **Reset Print Server** pages.

Basic Information

Configures basic information of the printer.

System Settings	**Printer Name**	
	Location	Sets the location of the printer.
	Contact Person	Sets the contact name, number, and other information of the printer administrator and service center.
	Administrator E-Mail Address	Sets the contact address of the printer administrator and service center.
	Asset Tag Number	
Dell Printer Configuration Web Tool Settings	**Auto Refresh**	Automatically refreshes the contents of the status display pages.
	Auto Refresh Interval	Sets the time interval for refreshing the contents of the status display pages automatically.

NOTE:

- The **Auto Refresh** feature is effective for the contents of the top frame, **Printer Status** page, **Job List** page, and **Completed Jobs** page.

Port Settings

Enables or disables printing ports and management protocol features.

Ethernet[*1]	**Ethernet Settings**	**Auto**	Detects the Ethernet transmission rate and the duplex mode.
		10Base-T Half-Duplex	Specifies as the default value.
		10Base-T Full-Duplex	
		100Base-TX Half-Duplex	
		100Base-TX Full-Duplex	
		1000Base-T Full-Duplex	
	Current Ethernet Settings		
	MAC Address		
	Energy Efficient Ethernet		Select the check box to enable the Energy Efficient Ethernet feature.
Port Status	**LPD**		Sets whether to enable each item.

	Port9100		
	IPP		
	WSD Print		
	WSD Scan		
	Network TWAIN		
	FTP		
	SMB		
	Bonjour (mDNS)		
	E-Mail Alert		
	Telnet		
	SNMP		
	Update Address Book		
	SNTP		
	Google Cloud Print		
	Print from Dell Document Hub[*2]		
	Scan to Dell Document Hub[*2]		

[*1] This item is available only when the printer is connected using an Ethernet cable.

[*2] This is available on Dell H625cdw and Dell H825cdw.

NOTE:

- The settings in the **Port Settings** page become valid only when the printer is restarted. When you change or configure the settings, click the **Apply New Settings** button to apply the new settings.

TCP/IP

Configures the IP address, subnet mask, and gateway address of the printer.

TCP/IP Settings	**IP Mode**		
	Host Name		
	IPv4	**IP Address Mode**	Sets the method for acquiring the IP address.
		Manual IP Address	When an IP address is being set manually, the IP is allocated to the printer using the format *nnn.nnn.nnn.nnn*. Each octet that makes up *nnn.nnn.nnn.nnn* is a value in the range of 0 to 254. 127 and any value in the range of 224 to 254 cannot be specified for the first octet of a gateway address.
		Manual Subnet Mask	When an IP address is being set manually, the subnet mask is specified using the format *nnn.nnn.nnn.nnn*. Each octet that makes up *nnn.nnn.nnn.nnn* is a value in the range of 0 to 255. 255.255.255.255 cannot be specified as the subnet mask.

		Manual Gateway Address	When an IP address is being set manually, the gateway address is specified using the format *nnn.nnn.nnn.nnn*. Each octet that makes up *nnn.nnn.nnn.nnn* is a value in the range of 0 to 254. 127 and any value in the range of 224 to 254 cannot be specified for the first octet of a gateway address.
	IPv6	**Enable Stateless Address**	Select the check box to enable the stateless address.
		Use Manual Address	Select the check box to set the IP address manually.
		Get IP Address from DHCP	Allows you to enable or disable the automatic setting of the IP address via DHCP.
		Manual Address	Sets the IP address. To specify an IPv6 address, enter the address followed by a slash (/) and then "64." For details, contact your system administrator.
		Manual Gateway Address	Sets the gateway address.
DNS	**DNS Domain Name**		
	IPv4	**Get DNS Server Address from DHCP**	Allows you to enable or disable the automatic setting of the DNS server address via DHCP.
		Manual DNS Server Address	Manually sets the DNS server address in *xxx.xxx.xxx.xxx* format when **Get DNS Server Address from DHCP** is not selected.
	IPv6	**Get DNS Server Address from DHCPv6-lite**	Select the check box to get the DNS server address automatically from the DHCPv6-lite server.
		Manual DNS Server Address	Sets the DNS server address.
	DNS Dynamic Update (IPv4)		Select the check box to enable dynamic updates to DNS.
	DNS Dynamic Update (IPv6)		Select the check box to enable dynamic updates to DNS.
	Auto Generate Search List		Select the check box to automatically generate the search list.
	Search Domain Name		Sets the search domain name. Up to 255 alphanumeric characters, periods, and hyphens can be used. If you need to specify more than one domain name, separate them using a comma or semicolon.
	Time-out		Sets the time-out period.
	Priority to IPv6 DNS Name Resolution		Select the check box to enable the DNS Name Resolution feature.
WINS	**WINS Mode**		Allows you to enable or disable the automatic setting of the primary and secondary WINS server addresses via DHCP.
	WINS Primary Server		Manually sets the primary WINS server address in *xxx.xxx.xxx.xxx* format when **WINS Mode** is not selected.

	WINS Secondary Server	Manually sets the secondary WINS server address in *xxx.xxx.xxx.xxx* format when **WINS Mode** is not selected.
LPD	**Connection Time-Out**	Sets the connection time-out period.
Port9100	**Port Number**	Sets the port number from 9000 to 9999.
	Connection Time-Out	Sets the connection time-out period.
IPP	**Printer URI**	Displays the printer URI.
	Connection Time-Out	Sets the connection time-out period.
	Port Number	Displays the port number for receiving requests from the client.
	Maximum Sessions	Displays the maximum number of connections received simultaneously by the client.
WSD	**Port Number**	Sets the port number to 80 or from 8000 to 9999.
	Receive Time-Out	Sets the receive time-out period.
	Notification Time-Out	Sets the notification time-out period.
	Maximum Number of TTL	Sets the maximum number of TTL from 1 to 10.
	Maximum Number of Notification	Sets the maximum number of notifications from 10 to 20.
Network TWAIN	**Connection Time-Out**	Sets the connection time-out period.
FTP	**Password**	Sets the password for FTP.
	Re-enter Password	Enter the password again to check it.
	Connection Time-Out	Sets the connection time-out period.
HTTP	**Port Number**	Sets the port number to 80 or from 8000 to 9999.
	Simultaneous Connections	Displays the maximum number of simultaneous connections.
	CSRF Protection	Select the check box to enable the CSRF Protection.
	Connection Time-Out	Sets the connection time-out period.
Telnet	**Password**	Sets the password for Telnet.
	Re-enter Password	Confirms the set password.
	Connection Time-Out	Sets the connection time-out period.
Update Address Book	**Connection Time-Out**	Sets the connection time-out period.

To configure the IP Filter feature, enter an IP address to be filtered in the Address text box and the subnet mask in the Address Mask text box. Enter a numeric value between 0 and 255 in each text box. "*" is appended to the current value.

IP Filter Setup Procedure

You can set up to a maximum of five items and the first item set takes priority. When setting multiple filters, enter the shortest address first followed by a slightly longer address, a longer address and so on.

Enabling Printing From a Specified User

The following describes the procedure to enable printing only from the "`192.0.2.1`" IP address.

1. Click the first column of the **Access List** row **1**.
2. Enter "`192.0.2.1`" in the **Address** text box and "`255.255.255.255`" in the **Address Mask** text box.
3. Select **Accept**.
4. Click **Apply New Settings**.

Disabling Printing From a Specified User

The following describes the procedure to disable printing only from the "`192.0.2.1`" IP address.

1. Click the first column of the **Access List** row **1**.
2. Enter "`192.0.2.1`" in the **Address** text box and "`255.255.255.255`" in the **Address Mask** text box.
3. Select **Reject**.
4. Click the first column of the **Access List** row **2**.
5. Enter "`0.0.0.0`" in the **Address** text box and "`0.0.0.0`" in the **Address Mask** text box.
6. Select **Accept**.
7. Click **Apply New Settings**.

Enabling and Disabling Printing from Network Addresses

You can enable printing from the "`192.168`" network address and disable printing from the "`192.0.2`" network address.

The following example describes how to enable printing from the "`192.0.2.1`" IP address.

1. Click the first column of the **Access List** row **1**.
2. Enter "`192.0.2.1`" in the **Address** text box and "`255.255.255.255`" in the **Address Mask** text box.
3. Select **Accept**.
4. Click the first column of the **Access List** row **2**.
5. Enter "`192.0.2.0`" in the **Address** text box and "`255.255.255.0`" in the **Address Mask** text box.
6. Select **Reject**.

7 Click the first column of the **Access List** row **3**.

8 Enter "`192.0.0.0`" in the **Address** text box and "`255.255.0.0`" in the **Address Mask** text box.

9 Select **Accept**.

10 Click **Apply New Settings**.

SMB

Specifies the setting of the Server Message Block (SMB) protocol.

Host Name	Sets the host name of the server computer.
Workgroup	Sets the workgroup.
Maximum Sessions	Sets the maximum number of sessions.
Unicode Support	Sets whether to notify the host name and workgroup name in Unicode characters during SMB transmission.
Auto Master Mode	Sets whether to enable the Auto Master Mode.
Encrypt Password	Sets whether to encrypt the password.
Job Time-Out	Sets the job time-out period.
Connection Time-Out	Sets the connection time-out period.

E-Mail Server

Configures detailed settings of E-Mail Server, E-Mail Alert and E-Mail Report. This page can also be displayed by clicking **E-Mail Server Settings Overview** in the left frame.

E-Mail Server Settings	**Primary SMTP Gateway**	Sets the primary SMTP gateway.
	SMTP Port Number	Sets the SMTP port number. This must be 25, 587 or between 5000 and 65535.
	E-Mail Send Authentication	Sets the authentication method for outgoing e-mail.
	SMTP Login User	Sets the SMTP login user. Up to 63 alphanumeric characters, periods, hyphens, underscores, and at symbols (@) can be used. If specifying more than one address, separate them using commas.
	SMTP Login Password	Sets the SMTP account password using up to 31 alphanumeric characters.
	Re-enter SMTP Login Password	Confirms the set SMTP account password.
	POP3 Server Address*	Sets the POP3 server address in IP address format of *aaa.bbb.ccc.ddd* or as a DNS host name using up to 63 characters.
	POP3 Port Number*	Sets the POP3 server port number. This must be 110 or between 5000 and 65535.
	POP User Name*	Sets the POP3 account user name. Up to 63 alphanumeric characters, periods, hyphens, underscores, and at symbols (@) can be used. If specifying more than one address, separate them using commas.
	POP User Password*	Sets the POP3 account password using up to 31 alphanumeric characters.

	Re-enter POP User Password*		Confirms the set password.
	Reply Address		Designates the reply e-mail address sent with each E-mail Alert.
	SMTP Server Connection		Displays the status of the SMTP server connection.
E-Mail Alert Settings	**E-Mail List 1**		Sets acceptable e-mail addresses for the E-Mail Alert feature using up to 255 alphanumeric characters.
	Select Alerts for List 1	**Supplies Alerts**	Select the check box to receive an E-Mail Alert for consumables.
		Paper Handling Alerts	Select the check box to receive an E-Mail Alert for paper handling.
		Service Call	Select the check box to receive an E-Mail Alert for Service Calls.
	E-Mail List 2		Sets acceptable e-mail addresses for the E-Mail Alert feature using up to 255 alphanumeric characters.
	Select Alerts for List 2	**Supplies Alerts**	Select the check box to receive an E-Mail Alert for consumables.
		Paper Handling Alerts	Select the check box to receive an E-Mail Alert for paper handling.
		Service Call	Select the check box to receive an E-Mail Alert for Service Calls.
E-Mail Report Settings	**History Report**		Sets whether to receive the job history report by e-mail after every 20 print, copy, scan, and fax jobs.
	Statistics Report		Sets whether to receive the statistic report by e-mail on the use of print, copy, scan, and fax.
	Volume Report		Sets whether to receive the print volume report by e-mail.
	Transmission Time		Sets what time the reports are sent.
	Recurrence		Sets at what recurrence the reports are sent.
	Weekly Settings (for Weekly only)		Sets the day of the week the reports are sent.
	Monthly Settings (for Monthly only)		Sets the day of the month the reports are sent.
	Destination E-Mail Address 1		Allows you to enter the e-mail address to which the reports are sent to.
	Destination E-Mail Address 2		Allows you to enter the e-mail address to which the reports are sent to.

* This item is available only when **POP before SMTP (Plain)** or **POP before SMTP (APOP)** for **E-Mail Send Authentication** is selected.

Bonjour (mDNS)

Configures the detailed settings of Bonjour.

LAN1*	**Host Name**	Sets the host name up to 63 alphanumeric characters and "-" (hyphen). The original setting remains valid if no input is made.
	Printer Name	Sets the printer name up to 63 alphanumeric characters and symbol sets. The original setting remains valid if no input is made.
	Wide-Area Bonjour	Select the check box to enable the Wide-Area Bonjour protocol.
LAN2*	**Host Name**	Sets the printer name up to 63 alphanumeric characters and symbol sets. The original setting remains valid if no input is made.
	Printer Name	Sets the printer name up to 63 alphanumeric characters and symbol sets. The original setting remains valid if no input is made.

* This is available on Dell H625cdw and Dell H825cdw.

SNMP

Configures the detailed settings of SNMP.

SNMP Configuration*1	**Enable SNMP v1/v2c Protocol**	Select the check box to enable the SNMP v1/v2c protocol.
	Edit SNMP v1/v2c Properties	Click to display the **SNMP v1/v2c** page and to edit the setting of SNMP v1/v2c protocol from the page.
	Enable SNMP v3 Protocol	Select the check box to enable the SNMP v3 protocol.
	Edit SNMP v3 Properties	Click to display the **SNMP v3** page and to edit the setting of SNMP v3 protocol from the page. You can click this item only when SSL communication is enabled.
Community Name	**Community Name (Read only)*2**	Sets the community name to access (read only) data using up to 31 alphanumeric characters. The original setting remains valid if no input is made. Characters entered for community name in the previous settings are not displayed on the screen. The default Read Community is public.
	Re-enter Community Name (Read only)*2	Enters the community name to access (read only) data again to check it.
	Community Name (Read/Write)*2	Sets the community name to access (read and write) data using up to 31 alphanumeric characters. The original setting remains valid if no input is made. Characters entered for community name in the previous settings are not displayed on the screen. The default Read/Write Community is private.
	Re-enter Community Name (Read/Write)*2	Enters the community name to access (read and write) data again to check it.
	Community Name (Trap)*2	Sets the community name used for trap up to 31 alphanumeric characters. The original setting remains valid if no input is made. Characters entered for Community Name (Trap) in the previous settings are not displayed on the screen. The default Trap Community is " " (NULL).
	Re-enter Community Name (Trap)*2	Enters the community name used for trap again to check it.

Trap Notification 1-4	**Trap Address Type**	Select the check boxes to notify trap occurrence. In this case, specify the IP address and IP socket in the following format:
	Trap Address	IPv4
	Port Number	Specify the IP address and IP socket in the *nnn.nnn.nnn.nnn:mmmmm* format. Each section of *nnn* is a variable value between 0 and 255. Note that values 127 and 224-254 are not valid for the first three-digits only. IP socket *mmmmm* is a variable value between 0 and 65,535. IPv6 Specify the IP address and IP socket in the *xxxx:xxxx:xxxx:xxxx:xxxx:xxxx:xxxx:xxxx:mmmmm* format. Each section of *XXXX* is a hexadecimal variable value between 0 and ffff. IP socket *mmmmm* is a variable value between 0 and 65,535.
	Notify	
	Network[*3]	
	Authenticate Error Trap	Select the check box to notify Authenticate Error Trap.

[*1] This is available on Dell H625cdw and Dell H825cdw.

[*2] The default value can be changed by using Dell Printer Configuration Web Tool.

[*3] This item is available only when **Wi-Fi Direct** is set to **Enable**.
The Wi-Fi Direct feature is available on Dell H625cdw and Dell H825cdw.

SNMP v3[*]

Edits the detailed settings of SNMP v3 protocol.

To enter this page, click **Edit SNMP v3 Properties** in the **SNMP** page.

Administrator Account	**Account Enabled**	Select the check box to enable the administrator account.
	User Name	Enters the user name of the administrator account.
	Authentication Password	Sets the authentication password of the administrator account using 8 to 32 alphanumeric characters.
	Re-enter Authentication Password	Confirms the set password.
	Privacy Password	Sets the privacy password of the administrator account using 8 to 32 alphanumeric characters.
	Re-enter Privacy Password	Confirms the set password.
Print Drivers / Remote Client Account	**Account Enabled**	Select the check box to enable the print drivers and remote client account.
	Reset to default Password	Click to reset the password for the print drivers and remote client account to default.

[*] This is available on Dell H625cdw and Dell H825cdw.

Scan to Network Folder

Specifies the client when scanning data.

FTP Client	**Connection Time-Out**	Sets the connection time-out period.
	FTP Passive	Sets whether to enable the FTP Passive mode.

SMB Client	**Connection Time-Out**	Sets the connection time-out period.
	SMB Protocol	Sets the SMB protocol.

SNTP

Configures the SNTP server settings in order to perform time synchronization through SNTP.

SNTP	**IP Address / Host Name**	Sets the IP address or the host name of the SNTP server.
	Connection Time-Out	Sets the connection time-out period.
	Time Synchronization Interval	Sets the interval for performing time synchronization using SNTP.
	Last Connection Time	Displays the last date and time when the printer was connected to the SNTP server.
	Connection Status	Displays the status of the connections between the SNTP server and the printer.

AirPrint

Configures the detailed setting of AirPrint.

AirPrint	**Enable AirPrint**	Select the check box to enable the printer for AirPrint.
	Enable USB	Select the check box to enable IPP over USB. When you disable **Enable AirPrint**, this setting will be disabled automatically.
Bonjour	**Name**	Enter the name that is to be displayed as an AirPrint printer.
	Location	Enter the location of the printer.
	Geo-Location	Enter the physical location of the printer.
IPP Authentication	**Basic Authentication**	Select the check box to enable the basic authentication scheme.
	User Name	Enter the user name.
	Password	Enter the user password.
	Re-enter Password	Re-enter the user password for confirmation.
Scan	**Connection Time-Out**	Sets the time duration until the connection becomes time-out.
SSL/TLS*	**SSL/TLS**	Click **Settings** to display the **SSL/TLS** page.
Supply Levels	**Cyan Toner Cartridge**	Displays the toner level.
	Magenta Toner Cartridge	
	Yellow Toner Cartridge	
	Black Toner Cartridge	

* This item is displayed only when **Wi-Fi Direct** is set to **Enable**.

Mopria

Enable to use Mopria Print Service.

NOTE:

- The **Enable** button is disabled, when both `Bonjour(mDNS)` and `IPP` are enabled.

Google Cloud Print

Registers the printer to Google Cloud Print.

Google Cloud Print*	**(Registration state)**	Displays the Google Cloud Print registration state.
	Register This Device to Google Cloud Print	Click to register the printer to Google Cloud Print.

* Google Cloud Print can only be used when the printer is using IPv4.

Dell Document Hub

Configures the connections to the Dell Document Hub Server.

NOTE:

- Dell Document Hub is available on Dell H625cdw and Dell H825cdw.

Dell Document Hub	**Connection Time-Out**	Sets the time duration until the connection becomes time-out.
	Polling Interval	Sets the interval time for polling.

Proxy Server

Configures the Proxy Server settings.

Proxy Server	**Use Proxy Server**	Sets whether to enable the use of a proxy server.
	Address to Bypass Proxy Server	Sets the address to bypass proxy server.
	Server Name	Sets the name of the proxy server.
	Port Number	Sets the port number from 1 to 65535.
	Authentication	Sets whether to enable authentication.
	Login Name	Sets the login name for the proxy server.
	Password	Sets the login password for the proxy server.
	Re-enter Password	Confirms the set password.

Wi-Fi

NOTE:

- Wi-Fi feature is available only when the printer is connected using the wireless network.
- Wireless network is available on Dell H625cdw and Dell H825cdw.

Configures the detailed setting for the wireless network.

To use the wireless network, make sure to disconnect the Ethernet cable.

NOTE:

- Once Wi-Fi is activated, wired LAN protocol is disabled.

Wi-Fi Settings	**Wi-Fi**		Sets whether to enable the Wi-Fi connection.
	SSID		Sets the name that identifies the wireless network. Up to 32 alphanumeric characters can be entered.
	Network Type		Sets the network type from either **Ad-Hoc** or **Infrastructure**.
	MAC Address		Displays the MAC address of the printer.
	Link Channel		Displays the channel number of the wireless connection for the printer.
	Link Quality		Displays the quality of the wireless network connection for the printer.
Security Settings	**Encryption**		Select the encryption type from the list.
		No Security	Sets No Security to configure the wireless setting without specifying an encryption type from WEP, WPA-PSK, and WPA-Enterprise.
		WEP	Sets the WEP to use through the wireless network.
		WPA-PSK AES/WPA2-PSK AES[*1, 2]	Sets the WPA-PSK AES/WPA2-PSK AES to use through the wireless network.
		WPA-Enterprise -AES/WPA2-Enterprise-AES[*2, 3]	Sets the WPA-Enterprise AES/WPA2-Enterprise AES to use through the wireless network.
		Mixed Mode PSK[*1, 2]	Sets the Mixed Mode PSK to use through the wireless network. Mixed Mode PSK automatically selects the encryption type from either WPA-PSK AES or WPA2-PSK AES.
		Mixed Mode Enterprise[*2, 3]	Sets the Mixed Mode Enterprise to use through the wireless network. Mixed Mode Enterprise automatically selects the encryption type from either WPA-Enterprise AES or WPA2-Enterprise AES.
WEP	**Encryption**		Select the WEP key code from either **Hex** or **Ascii**.
	WEP Key 1		Sets the WEP key set used through the wireless network only when **WEP 128bit** or **WEP 64bit** is selected for **Encryption**.
	Re-enter WEP Key 1		Enters the WEP key 1 again to check it.
	WEP Key 2		Sets the WEP key set used through the wireless network only when **WEP 128bit** or **WEP 64bit** is selected for **Encryption**.
	Re-enter WEP Key 2		Enters the WEP key 2 again to check it.
	WEP Key 3		Sets the WEP key set used through the wireless network only when **WEP 128bit** or **WEP 64bit** is selected for **Encryption**.
	Re-enter WEP Key 3		Enters the WEP key 3 again to check it.
	WEP Key 4		Sets the WEP key set used through the wireless network only when **WEP 128bit** or **WEP 64bit** is selected for **Encryption**.
	Re-enter WEP Key 4		Enters the WEP key 4 again to check it.

	Transmit Key[*5]	Sets the transmit key type from the list.
WPA-PSK	**Passphrase**	Sets the passphrase.
	Re-enter Passphrase/Key	Enters the passphrase again to check it.
WPA-Enterprise [*4]	**EAP-Identity**	Sets the EAP-Identity for the authentication.
	Authentication Method	Shows the authentication method.
	Login Name	Sets the login name for the authentication.
	Password	Sets the password.
	Re-enter Password	Enters the password again to check it.

[*1] For encryption, AES method is used.

[*2] This item is available only when **Infrastructure** is selected for **Network Type**.

[*3] For authentication and encryption by digital certificate, AES method is used.

[*4] To activate the setting, import a certificate which supports wireless LAN (server/client) on the **SSL/TLS** pages, and enable the relevant certificate in advance.

[*5] When **Auto** is selected for **Transmit Key**, the key set specified for **WEP Key 1** is used.

Wi-Fi Direct

Configures the detailed setting of the Wi-Fi Direct connection.

NOTE:

- Wi-Fi Direct is available on Dell H625cdw and Dell H825cdw.

Wi-Fi Direct	**Wi-Fi Direct**	Sets whether to enable the Wi-Fi Direct connection.
	Group Role	Sets the group role of the printer.
	Device Name	Specifies the printer name that identifies the Wi-Fi Direct network with up to 32 alphanumeric characters. Check it when selecting the printer name on your mobile device.
	WPS Setup	Configures the Wi-Fi Direct network using Wi-Fi Protected Setup (WPS).
Group Owner	**SSID (Character string following "DIRECT-**")**	Specifies a name to identify the Wi-Fi Direct network. Up to 32 alphanumeric characters can be entered. "DIRECT-" cannot be changed.
	Passphrase	Displays the passphrase. Check it when entering the passphrase into your mobile device.
	IP Address	Displays the IP address of the Wi-Fi Direct adapter.
	Subnet Mask	Displays the subnet mask.
Status	**Paired Device**	Displays the mobile name currently connected.
	Current Role	Displays the current group role of the printer.
	Current SSID	Displays the current SSID. Check it selecting the Wi-Fi Direct network name on your mobile device.

Reset Print Server

Initializes NVRAM (non-volatile RAM) for the network feature and restarts the printer. You can also initialize NVRAM of the printer from **Reset Defaults** in the **Printer Settings** menu.

Initialize NIC NVRAM Memory and restart printer.	Click **Start** to initialize NVRAM, revert network settings to the factory default settings, and restart the network capability.

Restart Printer	Click **Start** to restart the printer.

Security

The **Security** tab includes **Set Password**, **Authentication System**, **Kerberos Server**, **LDAP Server**, **LDAP Authentication**, **LDAP User Mapping**, **SSL/TLS**, **IPsec**, **802.1x**, **IP Filter**, and **SMTP Domain Filtering** pages.

Set Password

Specifies the password that is required to access the setup parameters of the printer from the Dell Printer Configuration Web Tool. This page can also be displayed by clicking **Set Password** in the left frame.

NOTE:

- To restore the password to the default (NULL), initialize the non-volatile memory (NVM).
- You can set the password for access to `Admin Settings`.

Administrator Password	Sets the password using up to 128 alphanumeric characters.
Re-enter Administrator Password	Confirms the set password.
Access denial by the authentication failure of the Administrator	Sets the amount of time the administrator should wait for the access to the printer setup from Dell Printer Configuration Web Tool. The access is denied if the time-out time is exceeded. If you set 0, this mode is disabled.

Authentication System

Specifies the server authentication type, the server response time-out, or the search time-out.

Authentication Type	**Authentication System Settings**	Select the authentication system from the list.
Authentication Type (for ColorTrack PRO)*	**Authentication System Settings**	Select the authentication system from the list. When the server you are accessing uses the Kerberos authentication, select **Kerberos (Windows)** as the authentication method and specify the server settings in "Kerberos Server."
Optional Information	**Server Response Time-Out**	Sets the amount of time the printer should wait for response from the server.
	Search Time-Out	Sets the amount of time the printer should wait for searching for the server.

* This is available on Dell S2825cdn.

Kerberos Server

Specifies the settings for the Kerberos server.

Kerberos Server	**IP Address / Host Name & Port**	Sets the IP address or host name, and the port address. The port address must be 88 or between 5000 and 65535.
	Domain Name	Specifies each information.
Kerberos Server (for ColorTrack PRO)*	**IP Address / Host Name & Port**	Sets the IP address or host name, and the port address. The port address must be 88 or between 5000 and 65535.
	Domain Name	Enter the domain name.

* This is available on Dell S2825cdn.

LDAP Server

Specifies the settings of the LDAP server.

Server Information	**IP Address / Host Name & Port**	Sets IP address or the host name, and the port address. The port address must be 389, 3268, or between 5000 and 65535.
	LDAP Server	Displays the current software information of the LDAP server.
Optional Information	**Search Directory Root**	Enters the search directory root.
	Login Credentials to Access LDAP Server	Select credential used to access the LDAP server.
	Login Name	Enters the login name.
	Password	Enters the login password using 1 to 127 alphanumeric characters. If the password is left blank (NULL), you cannot log in to a server.
	Re-enter Password	Enters the login password again to check it.
	Search Time-Out	Select **Wait LDAP Server Limit** to follow the time specified by the LDAP server. Select **Wait** to specify the time.
	Search Name Order	Sets the search order.
	Server Address Book	Select the check box to enable the server address book.
	Server Phone Book	Select the check box to enable the server phone book.
Server Information (for ColorTrack PRO)*	**IP Address / Host Name & Port**	Sets IP address or the host name, and the port address. The port address must be 389, 636, 3268, 3269, or between 5000 and 65535. When LDAPS communication is required, set the port number to 636, and when you use the global catalog, set the port number to 3269.
	LDAP Server	Displays the current software information of the LDAP server.
Optional Information (for ColorTrack PRO)*	**Search Directory Root**	Enter the search directory root.
	Login Name	Enter the login name.
	Password	Enter the login password using 1 to 127 alphanumeric characters.
	Re-enter Password	Enter the login password again to confirm it.
	Search Time-Out	Select **Wait LDAP Server Limit** to follow the time specified by the LDAP server. Select **Wait** to specify the time.

* This is available on Dell S2825cdn.

NOTE:

- **Server Address Book** must be set to **On** before you can use the server address book for the Scan to Email feature.
- **Server Phone Book** must be set to **On** before you can use the server phone book for the Fax function.

LDAP Authentication

Specifies the LDAP server authentication method.

LDAP Authentication	**Authentication Method**	Shows the authentication method.
	Use Added Text String	Select whether to use the added text string from the list.
	Text String Added to User Name	Enter the added text string.
LDAP Authentication (for ColorTrack PRO)*		Specifies the LDAP server authentication method.
	Authentication Method	Shows the authentication method.
	Use Added Text String	Select whether to use the added text string from the list.
	Text String Added to User Name	Enter the added text string.

* This is available on Dell S2825cdn.

LDAP User Mapping

Specifies the settings of the LDAP user mapping.

Common Name	Sets the attribute type of the common name set for the LDAP server.
Surname	Sets the attribute type of the surname set for the LDAP server.
Given Name	Sets the attribute type of the given name set for the LDAP server.
E-mail Address	Sets the attribute type of the e-mail address set for the LDAP server.
Fax Phone	Sets the attribute type of the fax phone number set for the LDAP server.

SSL/TLS

Specifies the settings for the SSL encryption communication to the printer, and set/delete the certificate used for IPsec, LDAPS, or Wi-Fi.

NOTE:

- Wireless network is available on Dell H625cdw and Dell H825cdw.

SSL/TLS	**HTTP - SSL/TLS Communication** *1	Select the check box to enable the HTTP-SSL/TLS Communication.
	HTTP - SSL/TLS Communication Port Number	Sets the port number, which is not identical with that of HTTP for SSL/TLS. This must be 443 or between 8000 and 9999.
	LDAP - SSL/TLS Communication *1	Select the check box to enable the LDAP, and access is established using SSL/TLS communication.
	SMTP - SSL/TLS Communication	Sets the type of SSL/TLS used to communicate with the SMTP server.
	MD5	Select the check box to enable the MD5.
Generate Self-Signed Certificate*2		Click to display the **Generate Self-Signed Certificate** page and to create a security certification from the page. The Generate Self-Signed Certificate button is available only when the self-signed certificate is not generated.

	Public Key Method	Select the public key method of the self-signed certificate.
	Size of Public Key	Select the size of public key.
	Issuer	Sets the issuer of SSL self-signed certificate.
	Validity	Enters the valid days from 1 to 9999 days.
	Generate Signed Certificate	Click to generate the SSL self-signed certificate.
Certificate Signing Request (CSR)		Click to display the **Certificate Signing Request (CSR)** page and to create a certificate signing request from the page.
	Digital Signature Algorithm	Select the digital signature algorithm.
	Public Key Size	Select the public key size.
	2 Letter Country Code (Required)	Enter the 2-letter country code.
	State / Province Name	Enter the state or province name up to 16 bytes.
	Locality Name	Enter the locality name up to 32 bytes.
	Organization Name (Required)	Enter the organization name up to 32 bytes.
	Organization Unit (Required)	Enter the organization unit up to 32 bytes.
	Common Name	Enter the common name.
	E-mail Address	Enter the e-mail address.
Upload Signed Certificate[*2]		Click to display the **Upload Signed Certificate** page and to upload the certificate file to the device from the page.
	Password	Enter the password to upload the certificate file.
	Re-enter Password	Enter the password again for confirmation.
	File Name	Click **Browse** to browse the file name to upload to the device.
	Import	Click **Import** to upload the certificate file to the device.
Certificate Management[*2]		Click to display the **Certificate Management** page and to manage a security certification from the page.
	Category	Select the device to certificate.
	Certificate Purpose	Select the connection to certificate.
	Certificate Order	Select the order to certificate.
	Display the List	Click to display the **Certificate List** page.
Delete All Certificates	**Delete**	Click to delete all the certificates.
Certificate List[*2]	**Category**	Displays the device to certificate selected at the **Certificate Management** page.
	Certificate Purpose	Displays the connection to certificate selected at the **Certificate Management** page.
	Issued To	Displays the list of certificate order.
	Validity	Displays whether certificate is valid or not.

	Certificate Details	Click to display the **Certificate Details** page. The **SSL/TLS** page is displayed when no item in the **Issued To** column is selected.
Certificate Details[*2]	**Category**	Displays the device to certificate selected at the **Certificate Management** page or **SSL/TLS** page.
	Issued To	Displays the device to certificate.
	Issuer	Displays the issuer to certificate.
	Serial Number	Displays the serial number of the device.
	Public Key Method	Displays the public key method.
	Size of Public Key	Displays the size of public key.
	Valid From	Displays the time the certificate is valid.
	Valid Until	Displays the time the certificate is invalid.
	Status	Displays whether certificate is valid or not.
	Certificate Purpose	Displays the purpose of certificate.
	Certificate Selection Status	Displays the type of device certificate you selected.
	E-mail Address	Displayed only when an e-mail address is specified in the certificate.
	Use this certificate	Click to apply this certificate to the device.
	Delete	Click to delete this certificate.
	Export This Certificate	Click to export the certificate to the other device.
Certificate Signing Request (CSR) Details	**2 Letter Country Code (Required)**	Displays the details of the Certificate Signing Request (CSR).
	State / Province Name	
	Locality Name	
	Organization Name (Required)	
	Organization Unit (Required)	
	Common Name	
	E-mail Address	

[*1] This item is available only when the self-signed certificate has been generated.

[*2] This item is effective only when connected via SSL/TLS (https). Only the administrator is allowed to display the pages.

IPsec

Specifies the Security Architecture settings for Internet Protocol (IPsec) for encrypted communication to the printer.

IPsec Settings	**Protocol**	Select the check box to enable the protocol.
	IKE	**Pre-Shared Key** is displayed for IKE.
	Pre-Shared Key	Sets a shared key. Up to 255 alphanumeric characters, periods, and hyphens can be used.

	Re-enter Pre-Shared Key	Enters the shared key again to check it.
	IKE SA Lifetime	Sets the lifetime for IKE SA from 5 to 28,800 minutes.
	IPsec SA Lifetime	Sets the lifetime for IPsec SA from 5 to 2,880 minutes.
	DH Group	Sets the DH group.
	PFS	Select the check box to enable the PFS setting.
	Remote peers IPv4 address	Sets the IP address to connect to.
	Remote peers IPv6 address	Sets the IP address to connect to.
	Non IPsec communication policy	Allows communication with a device which does not support IPsec.

NOTE:

- If IPsec is enabled with incorrect settings, you must disable it using the **`IPsec`** menu on the operator panel.

802.1x

Specifies the settings for IEEE 802.1x authentication for encrypted communication to the printer.

Configure 802.1x	**Enable IEEE 802.1x**		Select the check box to enable IEEE 802.1x authentication.
	Authentication Method	**EAP-MD5**	Selects the authentication method to use for IEEE 802.1x authentication.
		EAP-MS-CHAPv2	
		PEAP/MS-CHAPv2	
	Login Name: (Device Name)		Sets the login name (device name) for IEEE 802.1x authentication using up to 128 alphanumeric characters.
	Password		Sets the login password for IEEE 802.1x authentication using up to 128 alphanumeric characters.
	Re-enter Password		Confirms the set login password.

NOTE:

- This is available on Dell H625cdw and Dell H825cdw.

IP Filter

Specifies whether to enable IP filter feature, which allows to make settings of the IP filter feature used for LPD and Port9100.

IPv4 Filter	Enables or disables IPv4 Filter.
IP Filter Rule List	Add, edit, or delete IP filter rule. Up to 20 rules can be registered.
IPv6 Filter	Enables or disables IPv6 Filter.
IP Filter Rule List	Add, edit, or delete IP filter rule. Up to 20 rules can be registered.

SMTP Domain Filtering

Specifies whether to limit e-mail destination domains.

NOTE:

- This feature does not restrict sending e-mails through the E-Mail Alert feature.

SMTP Domain Filtering	**Domain Filtering**	Select the check box to enable Domain Filtering.
	Allow Domain List	Allows you to register up to five domains allowed for sending e-mails.

Copy Printer Settings

Copy Printer Settings

The **Copy Printer Settings** tab includes the **Copy Printer Settings** and **Copy Printer Settings Report** pages.

Copy Printer Settings

Copies the printer settings to the printers of the same configuration model on the same network environment.

NOTE:

- Printer settings can be simultaneously copied to printers of up to 10 IP addresses.
- You cannot copy the Address Book when the destination printer has a fax job.

1. Enter the IP address and password of the destination printer in the **IP Address** text box and **Password** text box.
2. Click the **Copy the settings to the Host in the above list.** button.

   Copying the settings is complete.

   NOTE:

   - The connection time-out period is 60 seconds.
3. Check the **Copy the settings to the Host in the above list and reboot the printer** menu of the Dell Printer Configuration Web Tool in the destination printer to verify if the settings were successfully copied.

   NOTE:

   - If the destination printer settings are different, the settings of only the same items are copied.

Copy Printer Settings Report

Displays whether the printer setting is successfully copied to the destination printers.

NOTE:

- The history is cleared by turning off the printer.

Print Volume

Print Volume

The **Print Volume** tab includes the **Print Volume** and **Dell ColorTrack** pages.

Print Volume

Displays the number of printed pages. This page can also be displayed by clicking **Print**

Volume in the left frame.

Printer Page Count	Displays the total number of pages printed since the printer was shipped from the factory.
Paper Used	Displays the number of pages printed for each paper size.

Dell ColorTrack

Specifies which users have access to color printing and to limit print volume per user.

ColorTrack Mode	**Off**	Enables to print the data with no authentication information.
	On	Restricts printing based on the print user information registered in the internal server.
Non Registered User		Sets whether to permit the printing of data with no authentication information. To permit the printing for non-account user, select the check box.
Auto Color To Mono Print		Sets whether to print all print jobs in black and white even when color print is specified.
ColorTrack Error Report		Sets whether to automatically print error-related information if printing using ColorTrack results in an error.
User Registration*		Click **Edit User Registration** to display the **Edit Print User Registration** page. To register a user, click **Create** to open the **Print User Settings** page. To delete a user, click **Delete** to open the **Delete User** page. Clicking **Back** returns the screen to the status prior to deleting the user. To check or change the registered user, click **Confirm / Change** to open the **Print User Settings** page.
User Registration No.		Displays the user registration number. The **Delete User** button is displayed when the user is already registered.
User Name		Sets the user name.
Password		Sets the user password using 4 to 12 alphanumeric characters.
Re-enter password		Enter the password again to check it.
Color Mode Limitation		Sets whether to limit color printing.
Upper Limit for Color Print		Sets the maximum number of pages allowed for color printing.
Cumulative Color Page Count		Displays the cumulative number of pages printed for color printing.
Upper Limit for Monochrome Print		Sets the maximum number of pages allowed for monochrome printing.
Cumulative Monochrome Page Count		Displays the cumulative number of pages printed for monochrome printing.

* This item is displayed only when **ColorTrack Mode** is **On**.

Address Book

E-Mail Address

The **E-Mail Address** tab includes the **E-Mail Address**, **E-Mail Group** and **Default Setup** pages.

E-Mail Address

Displays the e-mail address entries registered on the **E-Mail Address** page.

Address List to:	Selecting each button displays a list of entries for the group of user IDs indicated on the button.
ID	Displays the user ID.
Name	Displays the user name. (**Not in Use**) is displayed when there is no registration.
Address	Displays the e-mail address of the user.
Delete	Deletes the entry for the selected user ID.
Confirm / Change	Displays a dialog box where you can edit the entry of the selected user ID.
Create	Displays a dialog box where you can create a new entry under the selected user ID.

E-Mail Address (Confirm/Change, Create)

Displays or edits the e-mail address entries on the **E-Mail Address** page, or create a new entry. The following items are in the dialog box that appears when you click **Confirm / Change** or **Create** on the **E-Mail Address** top page.

ID	Displays the selected user ID.
Name	Allows you to view or edit the name of the user registered under the user ID, or enter a name for the new entry.
Address	Allows you to view or edit the e-mail address of the user, or enter an e-mail address for the new entry.
Delete*	

* This item is available only when you click **Confirm / Change**.

E-Mail Address (Delete)

Deletes the e-mail address entries registered on the **E-Mail Address** page. The following items are in the dialog box that appears when you click **Delete** on the **E-Mail Address** top page.

E-Mail Group

Displays the e-mail address entries registered on the **E-Mail Group** page.

GroupID	Displays the group ID.
Name	Displays the assigned group name. (**Not in Use**) is displayed when there is no registration.
Delete	Deletes the entry for the selected group ID.
Confirm / Change	Displays a dialog box where you can edit the entry for the selected group ID.

Create	Displays a dialog box where you can create a new entry under the selected group ID.

E-Mail Group (Confirm/Change, Create)

Displays or edits the e-mail address group entries on the **E-Mail Group** page, or create a new entry. The following items are in the dialog box that appears when you click **Confirm / Change** or **Create** on the **E-Mail Group** top page.

E-Mail Group	**ID**	Displays the selected group ID.
	Name	Allows you to view or edit the name assigned for the group ID, or enter a new group name.
	Delete*	
E-Mail Address	**Address List to:**	Selecting each button displays a list of entries for the group of IDs indicated on the button.
	ID	Displays the user ID. Select the check box on the left to create the group.
	Name	Displays the user name. (**Not in Use**) is displayed when there is no registration.
	Address	Allows you to view or edit the e-mail address of an entry registered under the selected user ID, or enter an e-mail address for the new entry.

* This item is available only when you click **Confirm / Change**.

E-Mail Group (Delete)

Deletes the e-mail group entries registered on the **E-Mail Group** page. The following items are in the dialog box that appears when you click **Delete** on the **E-Mail Group** top page.

Default Setup

Sets the default e-mail subject and message.

Default Subject	Allows you to enter the default e-mail subject.
Body Text	Allows you to enter the default e-mail message.

Server Address

The **Server Address** tab includes the **Server Address** page.

Server Address

Displays the server address entries registered on the **Server Address** page.

Address List to:	Selecting each button displays a list of entries for the group of IDs indicated on the button.
ID	Displays the server ID.
Name	Displays the file directory name. (**Not in Use**) is displayed when there is no registration.
Server Address	Displays the address of the file directory.
Delete	Deletes the entry for the selected server ID.
Confirm / Change	Displays a dialog box where you can edit the entry for the selected server ID.

Create	Displays a dialog box where you can create a new entry under the selected server ID.

Server Address (Confirm/Change, Create)

Displays or edits the server address entries on the **Server Address** page, or create a new entry. The following items are in the dialog box that appears when you click **Confirm / Change** or **Create** on the **Server Address** top page.

ID		Displays the selected server ID.
Name		Allows you to view or change the server name assigned to the server ID, or enter a new server name.
Server Type		Allows you to view the server type if you click **Confirm / Change**. Allows you to edit the server type if you click **Create**.
	FTP[*1]	Select this to store scanned data on a server via the FTP protocol.
	SMB[*1]	Select this to store scanned data on a computer via the Server Message Block (SMB) protocol.
Server Address		Allows you to view or edit the server address registered under the server ID, or enter a new server address.
Share Name[*2]		Allows you to view or edit the assigned shared name, or enter a new shared name, when **Server Type** is set to **SMB**.
Server Path		Allows you to view or edit the assigned server path, or enter a new path.
Server Port Number		Allows you to view or edit the assigned server port number, or enter a new port number. If you leave the text box blank, the default port number (FTP: 21, SMB: 139) is used.
Login Name		Allows you to view or edit the login name that is required to access the selected protocol, or enter a new login name.
Login Password		Allows you to view or edit the password that is required to access the selected protocol, or enter a new password.
Re-enter Password		Confirms the set password.
Delete[*3]		

[*1] You can edit this item only when you click **Create**.
[*2] This item is available only when **Server Type** is set to **SMB**.
[*3] This item is available only when you click **Confirm / Change**.

Server Address (Delete)

Deletes the server address entries registered on the **Server Address** page. The following items are in the dialog box that appears when you click **Delete** on the **Server Address** top page.

Phone Book

The **Phone Book** tab includes the **FAX Speed Dial** and **FAX Group** pages.

FAX Speed Dial

Displays the fax number entries registered on the **FAX Speed Dial** page.

Speed Dial List to:	Selecting each button displays a list of entries for the group of speed dial codes indicated on the button.
Speed Dial	Displays the speed dial ID.

Name	Displays the assigned name for a speed dial ID.
Phone Number	Displays the speed dial code. (**Not in Use**) is displayed when there is no registration.
Delete	Deletes the entry for the selected speed dial code.
Confirm / Change	Displays a dialog box where you can edit the entry for the selected speed dial code.
Create	Displays a dialog box where you can create a new entry under the selected speed dial code.

FAX Speed Dial (Confirm/Change, Create)

Displays or edits the speed dial entries on the **FAX Speed Dial** page, or create a new entry. The following items are in the dialog box that appears when you click **Confirm / Change** or **Create** on the **FAX Speed Dial** top page.

Speed Dial	Displays the selected speed dial code.
Name	Allows you to view or edit the name of an entry registered under the speed dial code, or enter a name for the new entry.
Phone Number	Allows you to view or edit the fax number of an entry registered under the speed dial code, or enter a fax number for the new entry.
Delete*	Deletes the entry for the speed dial code. This button is available only on the dialog box for editing an existing entry.

* This item is available only when you click **Confirm / Change**.

FAX Speed Dial (Delete)

Deletes the speed dial entries registered on the **FAX Speed Dial** page. The following items are in the dialog box that appears when you click **Delete** on the **FAX Speed Dial** top page.

FAX Group

Displays the fax group entries registered on the **FAX Group** page.

ID	Displays a fax group ID.
Name	Displays the assigned group name. (**Not in Use**) is displayed when there is no registration.
Delete	Deletes the entry for the selected group ID.
Confirm / Change	Displays a dialog box where you can edit the entry for the selected group ID.
Create	Displays a dialog box where you can create a new entry under the selected group ID.

FAX Group (Confirm/Change, Create)

Displays or edits the fax number group entries on the **FAX Group** page, or create a new entry. The following items are in the dialog box that appears when you click **Confirm / Change** or **Create** on the **FAX Group** top page.

FAX Group	**ID**	Displays the selected group ID.
	Name	Allows you to view or edit the name assigned for the group ID, or enter a new group name.
	Delete*	Deletes the current entry.

FAX Speed Dial	**Speed Dial List to:**	Selecting each button displays a list of entries for the group of speed dial codes indicated on the button.
	Speed Dial	Displays the speed dial code. Select the check box on the left to add the speed dial code in the group.
	Name	Displays the name registered for the speed dial code. (**Not in Use**) is displayed when there is no registration.
	Phone Number	Allows you to view or edit the fax number of an entry registered under the selected speed dial code, or enter a fax number for the new entry.

* This item is available only when you click **Confirm / Change**.

FAX Group (Delete)

Deletes the fax number group entries registered on the **FAX Group** page. The following items are in the dialog box that appears when you click **Delete** on the **FAX Group** top page.

Tray Management

Use the **Tray Management** menu to set the paper size and type of paper loaded in tray1 and the optional 550-sheet feeder.

Tray Management

Tray Settings	**MPF Mode**	Sets whether to use the print driver settings for the size and type of paper loaded in the Multipurpose Feeder (MPF).
	MPF Paper Size[*1]	Sets the size of paper loaded in the MPF.
	MPF Paper Type[*1]	Sets the type of paper loaded in the MPF.
	MPF Custom Paper Size - Y[*1]	Sets the length of custom size paper loaded in the MPF.
	MPF Custom Paper Size - X[*1]	Sets the width of custom size paper loaded in the MPF.
	MPF Display Tray Prompt[*1]	Sets whether to display a popup message that prompts the user to set the paper size and type when the paper is loaded in the MPF.
	Tray 1 Paper Size	Sets the size of paper loaded in tray1.
	Tray 1 Paper Type	Sets the type of paper loaded in tray1.
	Tray 1 Custom Paper Size - Y	Sets the length of custom size paper loaded in tray1.
	Tray 1 Custom Paper Size - X	Sets the width of custom size paper loaded in tray1.
	Tray 1 Display Tray Prompt	Sets whether to display a popup message that prompts the user to set the paper size and type when the paper is loaded in tray1.
	Tray 2 Paper Size[*2]	Sets the size of paper loaded in the optional 550-sheet feeder.
	Tray 2 Paper Type[*2]	Sets the type of paper loaded in the optional 550-sheet feeder.
	Tray 2 Custom Paper Size - Y[*2]	Sets the length of custom size paper loaded in the optional 550-sheet feeder.

	Tray 2 Custom Paper Size - X[*2]	Sets the width of custom size paper loaded in the optional 550-sheet feeder.
	Tray 2 Display Tray Prompt[*2]	Sets whether to display a popup message that prompts the user to set the paper size and type when the paper is loaded in the optional 550-sheet feeder.
Tray Priority	**1st Priority**	Sets the paper source to be used as the first priority.
	2nd Priority	Sets the paper source to be used as the second priority.
	3rd Priority[*2]	Sets the paper source to be used as the third priority.

[*1] This item is available only when **Use Panel Settings** in **MPF Mode** is selected.

[*2] This item is available only when the optional 550-sheet feeder is installed.

Print Media Guidelines

This section describes selecting and caring for print media. The printer provides high-quality printing on a variety of print media. Selecting the appropriate print media for the printer helps to avoid printing troubles.

NOTE:

- Use only laser print media. Do not use ink jet print media in the printer.

To help avoiding jam, see "Before Loading."

Supported Print Media

Multipurpose Feeder (MPF)

Paper Size	A4 (210 × 297 mm) B5 (182 × 257 mm) A5 (148 × 210 mm) B6 (128 × 182 mm) A6 (105 × 148 mm) Letter (8.5 × 11 inches) Folio (8.5 × 13 inches) Legal (8.5 × 14 inches) Executive (7.25 × 10.5 inches) Statement (5.5 × 8.5 inches) Envelope #10 (104.8 × 241.3 mm) Monarch (98.4 × 190.5 mm) DL (110 × 220 mm) C5 (162 × 229 mm) Custom[*1]: Width: 76.2 – 215.9 mm (3 – 8.5 inches) Length: 127 – 355.6 mm (5 – 14 inches)

Paper Type	Plain (Light) Plain (Normal) Plain (Thick) Covers (Thin)[*2] Covers (Thick)[*2] Rough Surface[*2] Coated (Normal)[*2] Coated (Thick)[*2] Label (Light)[*2] Label (Normal)[*2] Envelope[*2] Recycled Letterhead[*2] Preprinted[*2] Prepunched[*2] Color
Loading Capacity	50 sheets of the standard paper

[*1] XML Paper Specification (XPS) driver does not support custom size paper.
[*2] Paper type that does not support printing on the back side of printed paper.

Tray1

Paper Size	A4 (210 × 297 mm) B5 (182 × 257 mm) A5 (148 × 210 mm) B6 (128 × 182 mm) A6 (105 × 148 mm) Letter (8.5 × 11 inches) Folio (8.5 × 13 inches) Legal (8.5 × 14 inches) Executive (7.25 × 10.5 inches) Statement (5.5 × 8.5 inches) Envelope #10 (104.8 × 241.3 mm) Monarch (98.4 × 190.5 mm) DL (110 × 220 mm) C5 (162 × 229 mm) Custom[*1]: Width: 76.2 – 215.9 mm (3 – 8.5 inches) Length: 148 – 355.6 mm (5.8 – 14 inches)

Paper Type	Plain (Light) Plain (Normal) Plain (Thick) Covers (Thin)*2 Covers (Thick)*2 Coated (Normal)*2 Coated (Thick)*2 Labels (Light)*2 Labels (Normal)*2 Envelope*2 Recycled Letterhead*2 Preprinted*2 Prepunched*2 Color
Loading Capacity	250 sheets of the standard paper

*1 XML Paper Specification (XPS) driver does not support custom size paper.

*2 Paper type that does not support printing on the back side of printed paper.

Optional 550-Sheet Feeder

Paper Size	A4 (210 × 297 mm) B5 (182 × 257 mm) A5 (148 × 210 mm) Letter (8.5 × 11 inches) Folio (8.5 × 13 inches) Legal (8.5 × 14 inches) Executive (7.25 × 10.5 inches) Custom*1: Width: 76.2 – 215.9 mm (3 – 8.5 inches) Length: 190.5 – 355.6 mm (7.5 – 14 inches)
Paper Type	Plain (Light) Plain (Normal) Plain (Thick) Covers (Thin)*2 Covers (Thick)*2 Coated (Normal)*2 Labels (Light)*2 Labels (Normal)*2 Recycled Letterhead*2 Preprinted*2 Prepunched*2 Color
Loading Capacity	550 sheets of the standard paper

*1 XML Paper Specification (XPS) driver does not support custom size paper.

*2 Paper type that does not support printing on the back side of printed paper.

NOTE:

- For Plain and Label paper, you can preset the paper density by selecting the Paper Density (Light or Normal) under Maintenance from the operator panel, Tool Box, or Dell™ Printer Configuration Web Tool.
  Once you set the Paper Density settings, the printer uses the settings for Plain and Label paper.

Supported Paper Weight

Paper type	Weight (g/m^2)
Plain	60 – 90
Plain Thick	91 – 105
Recycled	60 – 90
Labels	–
Covers	106 – 176
Covers Thick	177 – 220
Envelope	–
Coated	106 – 176
Coated Thick	177 – 220
Letterhead	60 – 90
Preprinted	60 – 90
Prepunched	60 – 90
Color	60 – 90

Unacceptable Print Media

- Chemically treated paper used to make copies without carbon paper, also known as carbonless paper, carbonless copy paper (CCP), or no carbon required (NCR) paper
- Pre-printed paper with chemicals that may contaminate the printer
- Pre-printed paper that can be affected by the temperature in the fusing unit
- Pre-printed paper that requires a registration (the precise print location on the page) greater than ±0.09 inch, such as Optical Character Recognition (OCR) forms. In some cases, you can adjust registration with your software program to successfully print on these forms.
- Erasable bond, synthetic paper, and thermal paper
- Rough-edged, rough or heavily textured surface paper, or curled paper
- Recycled paper containing more than 25% post-consumer waste that does not meet DIN 19309
- Multiple-part forms or documents
- Talc or acid paper that may deteriorate print quality (blank spaces or blotches may appear in the text)

Recommended Print Media

Proper print media selection helps prevent jams and ensures trouble-free printing.

- For the best print quality and feed reliability, use 75 g/m^2 (20 lb) xerographic paper.

- For the best print quality in black and white, use 90 g/m^2 (24 lb) xerographic, grain long paper.
- Print media designed for general business use also provides acceptable print quality.
- Laser printing process heats print media to high temperatures. Only use paper able to withstand high temperatures without discoloring, bleeding, or releasing hazardous emissions. Check with the manufacturer or vendor to determine whether the paper you have chosen is acceptable for laser printers.

Recommended Pre-Printed Media and Letterheads

- Use grain long paper for best results.
- Use only forms and letterheads printed using an offset lithographic or engraved printing process.
- Use print media that absorb ink, but does not bleed.
- Avoid print media with rough or heavily textured surfaces.
- Use print media printed with heat-resistant inks designed for use in xerographic copying machines. The ink must withstand temperatures of 225°C (437°F) without melting or releasing hazardous emissions.
- Use print media printed with inks that are not affected by the resin in the toner or the silicone in the fusing unit. Inks that are oxidation-set or oil-based should meet these requirements; latex inks might not. If you are in doubt, contact your paper supplier.

Recommended Pre-Punched Print Media

- Use only pre-punched paper made at the paper manufacturer.
- Do not drill print media which are already packaged in a ream. Using them may result in paper jams.
- Pre-punched print media can include more paper dust than standard print media. The printer may require more frequent cleaning, and feed reliability may not be as good as standard print media.
- Weight guidelines for pre-punched print media are the same as non-punched print media.

Recommended Envelopes

Depending on the envelopes, it is possible to expect variable levels of wrinkling.

- Use only high-quality envelopes that are designed for use in laser printers.
- Use envelopes made from 75 g/m^2 (20 lb bond) paper. You can use up to 105 g/m^2 (28 lb bond) weight for the envelope feeder as long as the cotton content is 25% or less. Envelopes with 100% cotton content must not exceed 90 g/m^2 (24 lb bond) weight.
- Use envelopes that can withstand temperatures of 205°C (401°F) without sealing, excessive curling, wrinkling, or releasing hazardous emissions. If you are in doubt, contact your envelope supplier.
- Check for high humidity. High humidity (higher than 60%) and high printing temperature may seal the envelopes.
- Do not use envelopes that:
  - Have excessive curl or twist

- Are stuck together or damaged in any way
- Contain windows, coated linings, self-stick adhesives, holes, perforations, cutouts, or embossing
- Use metal clasps, string ties, or metal folding bars
- Have an interlocking design
- Have postage stamps attached
- Have any exposed adhesive when the flap is in the sealed or closed position
- Have nicked edges or bent corners
- Have rough, cockle, or laid finishes

Recommended Labels

- Label adhesives, face sheet, and topcoats must be able to withstand temperatures of 205°C (401°F) and pressure of 25 pounds per square inch (psi) without sealing, excessive curling, wrinkling, or releasing hazardous emissions.
- Use labels without sealing, excessive curling, wrinkling, or releasing hazardous emissions.
- Do not use label sheets with a slick backing material.
- Do not use labels that have exposed adhesive.
- Do not use label sheets that have adhesive to the edge of the sheet. It is recommended that zone coating of the adhesive is done at least 1 mm (0.04 inch) away from edges. Otherwise, a jam may occur in the printer, and adhesive material may contaminate the printer and cartridges.

WARNING:

- **Contaminating the printer and cartridges with adhesive could void your printer and cartridge warranties.**

Print Media Storage Guidelines

For proper print media storage, the following guidelines help you to avoid print media feeding problems and uneven print quality.

- Store print media in an environment where the temperature is approximately 21°C (70°F) and the relative humidity is 40%.
- Store print media on a flat surface so that the edges do not buckle or curl.
- Print media should be stored on pallets, cartons, shelves, or in cabinets, rather than directly on the floor.
- Do not place anything on top of the print media packages.

Loading Print Media

Loading print media properly helps prevent jams and ensures trouble-free printing.

Before loading any print media, identify the recommended print side of the print media. This information is usually indicated on the print media package.

Before Loading

The following instructions describe how to avoid paper jams:

- Use only laser print media. Do not use ink jet paper in the printer.
- Use only recommended print media. See "Print Media Guidelines."
- Keep print media stored in an acceptable environment. See "Print Media Storage Guidelines."
- Do not overload the print media sources. Make sure that the print media stack height does not exceed the maximum height indicated by the load-line labels in the tray.
- Do not load wrinkled, creased, damp, or curled print media.
- Flex, fan, and straighten the print media before loading.
- Do not use print media that you have cut or trimmed.
- Do not mix different print media sizes, weights, or types in the same print media source.
- Make sure that the recommended print side is facing up when you load the print media.
- Do not remove the feeding tray during printing.
- Make sure that all cables that connect to the printer are attached correctly.
- Overtightening the guides may cause jams.
- If jams caused by misfeeding paper occur frequently, wipe the retard rollers in the tray or Multipurpose Feeder (MPF) with a cloth moistened with water.

Loading Print Media in Tray1 and the Optional 550-Sheet Feeder

NOTE:

- To avoid paper jams, do not remove the tray while printing is in progress.

1. For the optional 550-sheet feeder, pull the tray halfway out of the printer.

   For Tray1, proceed to step 2.

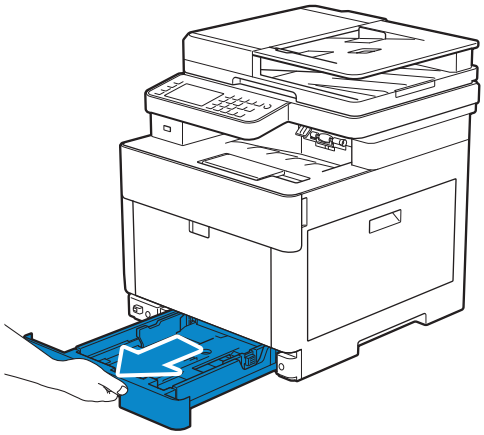

2 Hold the tray with both hands, and then remove it from the printer.

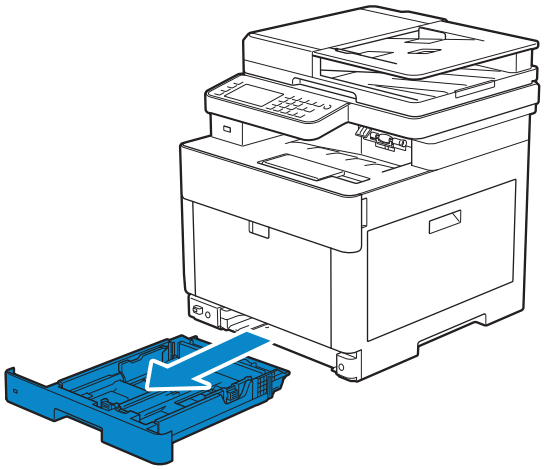

3 Adjust the paper guides according to the paper size that you want to load.

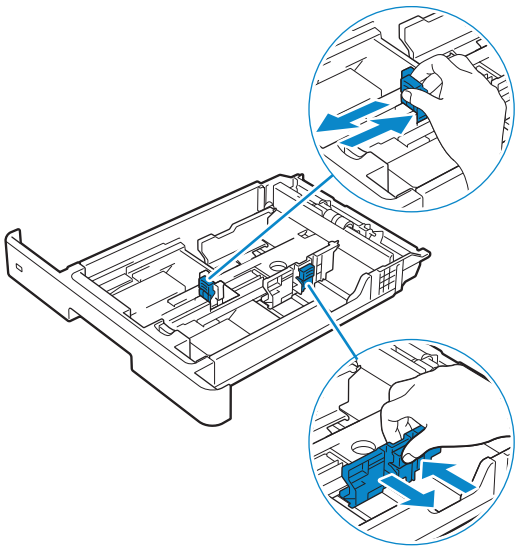

NOTE:

- When you load Legal-size paper, extend the tray while pushing the lever located on the front part of the tray.

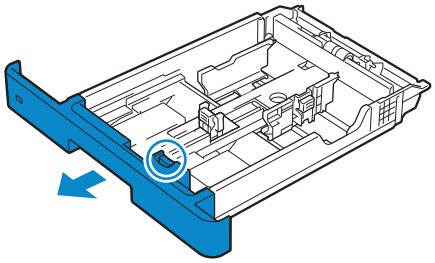

4 Before loading the print media, flex and fan the sheets. Straighten the edges of the stack on a level surface.

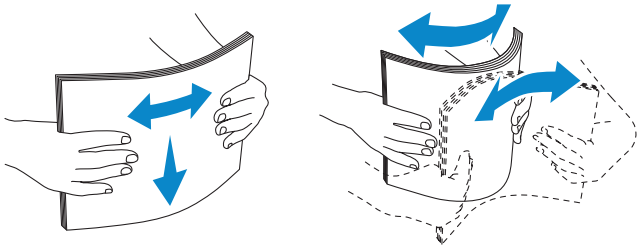

5 Load the print media into the tray with the recommended print side facing up.

NOTE:

- Do not exceed the maximum fill line in the tray. Overfilling the tray may cause paper jams.
- When loading coated paper, load one sheet at a time.
- When loading letterhead, pre-printed, or pre-punched paper, see "Loading Letterhead, Pre-Printed, and Pre-Punched Paper."

6 Make sure that paper guides rest lightly against the edge of the print media stack.

NOTE:

- Overtightening the guides may cause jams.

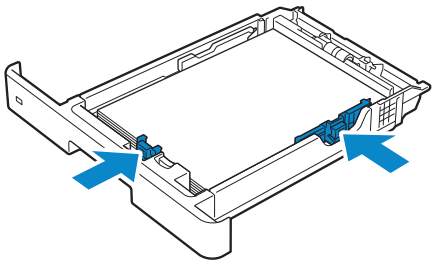

NOTE:

- When loading user-specified print media, adjust the width guides and slide the extendable part of the tray by pinching the length guide and sliding it until it rests lightly against the edge of the paper.

7 Insert the tray into the printer and push until it stops.

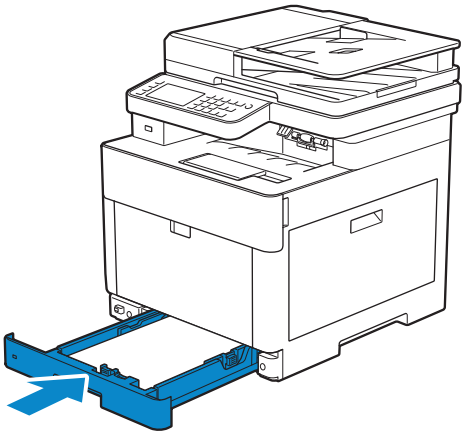

NOTE:

- If the front side of the tray is extended, the tray protrudes when it is inserted into the printer.

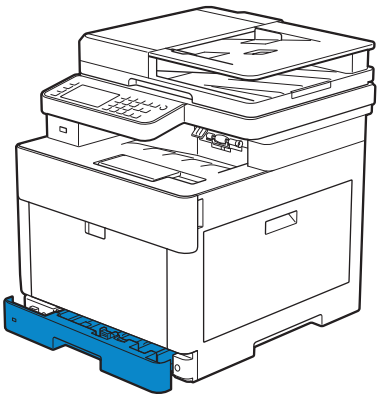

8 When the Tray Configuration screen appears, tap `Size`.
The following shows the Tray1 screen as an example.

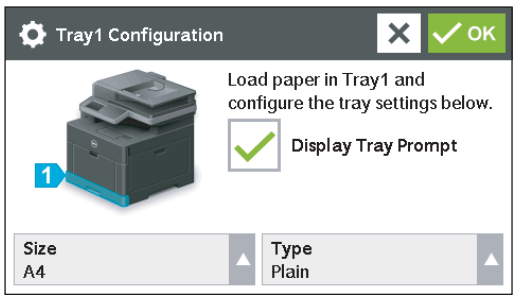

NOTE:

- Set the same paper size and type as the actual paper being loaded. An error may occur if the paper size or type setting is different from the loaded paper.

9 Select ▼ or ▲ until the desired paper size appears, and then select the desired paper size.

10 Tap `Type`.

11 Select ▼ or ▲ until the desired paper type appears, and then select the desired paper type.

12 Tap OK.

Loading Envelopes in the Tray1

NOTE:

- Use only recommended envelopes. See "Recommended Envelopes."

The following guidelines describe how to load envelopes.

- Use only freshly unpackaged and undamaged envelopes.

  If you do not load envelopes in the tray right after they have been removed from the package, they may bulge. To avoid jams, press firmly across the whole envelopes to flatten them as shown in the illustration before loading the envelopes in the tray.

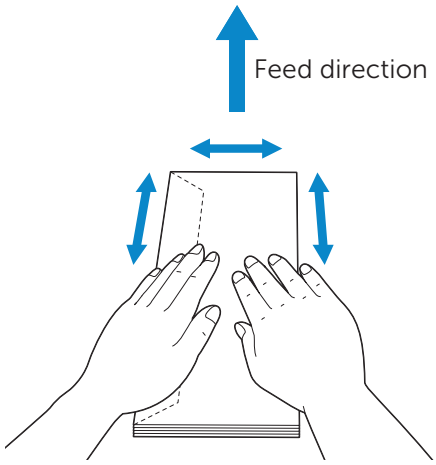

- Use only same size envelopes for a single print job.
- The maximum height (quantity) of envelopes that can be loaded in the tray is approximately 27.5 mm (1.08 inch) (20 envelopes).
- When printing on envelopes, set the print media source to the tray. From the print driver, select **Envelope** for the paper type, and then select the correct size of the envelope.
- Adjust the paper guides accordingly after envelopes are loaded.

Envelope #10, Monarch, or DL

Load the envelopes with the flaps closed and the print side facing up. Make sure that the flaps are on the left side when you face towards the printer.

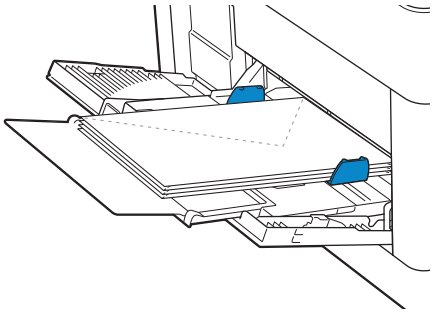

C5

When loading envelopes with the flaps open, load the envelopes so that the print side

faces up and the bottom edge (the edge with no flaps) enters the printer first.

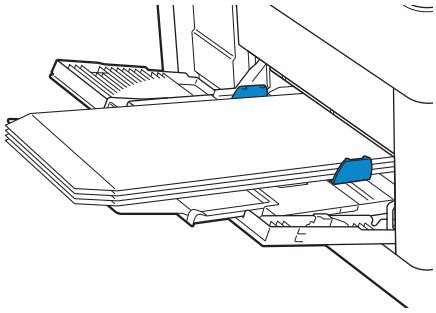

When loading envelopes with the flaps closed, load the envelopes so that the print side faces up and the top edge (the edge with flaps) enters the printer first.

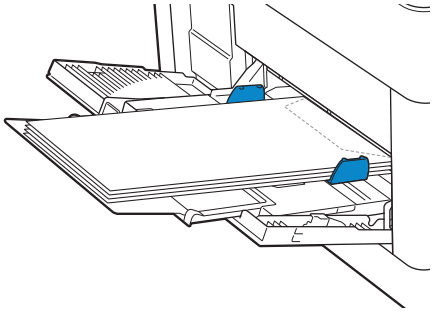

Loading Print Media in the Multipurpose Feeder (MPF)

NOTE:

- Do not add or remove print media when there is still print media in the MPF or when the printer is printing from the MPF. This may result in a paper jam.
- Do not place objects on the MPF.
- Do not apply excessive force on the MPF or press it down.
- If a jam occurs with print media, feed one sheet at a time through the MPF.
- The label on the MPF shows how to load the MPF with paper, and how to turn an envelope for printing.

1 Gently pull and open the MPF cover.

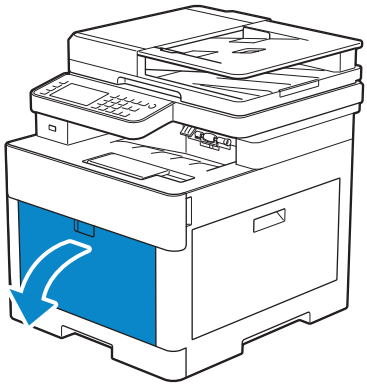

NOTE:

- Extend the extension tray as necessary.

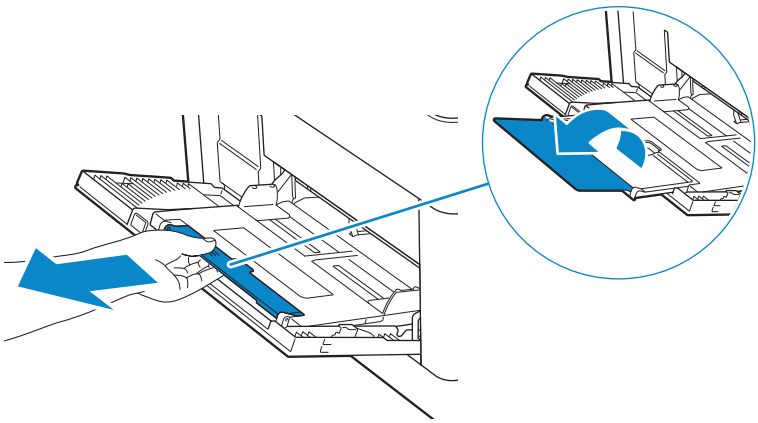

2 Slide the width guides according to the paper size that you want to load.

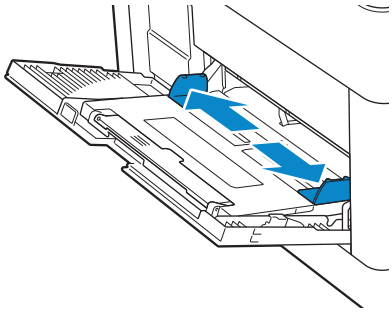

3 Insert all print media facing up and top edge first into the MPF.

NOTE:

- Do not force the print media into the MPF.
- When loading coated paper, load one sheet at a time.
- When loading letterhead, pre-printed, or pre-punched paper, see "Loading Letterhead, Pre-Printed, and Pre-Punched Paper."

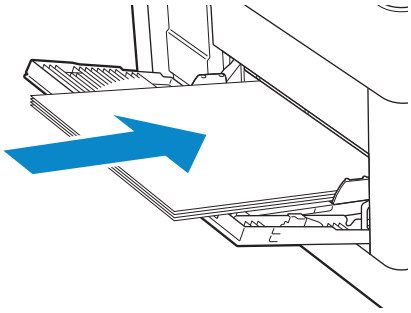

4 Make sure that both width guides rest lightly against the edge of the print media stack.

NOTE:

- Overtightening the guides may cause jams.

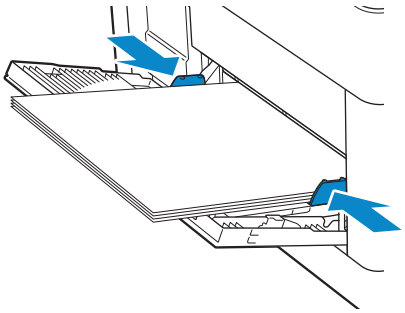

5 When the `MPF Configuration` screen appears, tap `Size`.

6 Tap ▼ or ▲ until the desired paper size appears, and then select the size.

7 Tap `Type`.

8 Tap ▼ or ▲ until the desired paper type appears, and then select the type.

9 Tap `OK`.

Loading Envelopes in the MPF

NOTE:

- Use only recommended envelopes. See "Recommended Envelopes."

The following guidelines describe how to load envelopes.

- Use only freshly unpackaged and undamaged envelopes.

  If you do not load envelopes in the MPF right after they have been removed from the package, they may bulge. To avoid jams, press firmly across the whole envelopes to flatten them as shown in the illustration before loading the envelopes in the MPF.

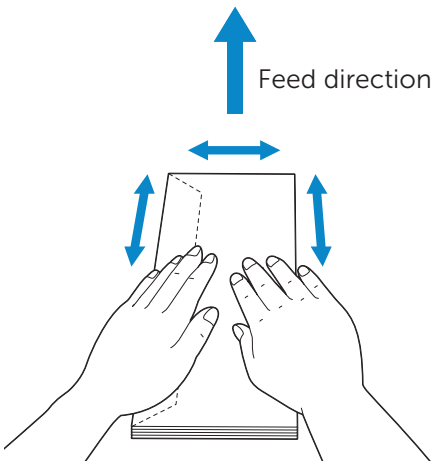

- Use only same size envelopes for a single print job.
- The maximum height (quantity) of envelopes that can be loaded in the MPF is approximately 5 mm (0.19 inch) (5 envelopes).
- When printing on envelopes, set the print media source to the MPF. From the print driver, select **Envelope** for the paper type, and then select the correct size of the envelope.
- Adjust the width guides accordingly after envelopes are loaded.

Envelope #10, Monarch, or DL

Load the envelopes with the flaps closed and the print side facing up. Make sure that the flaps are on the left side when you face towards the printer.

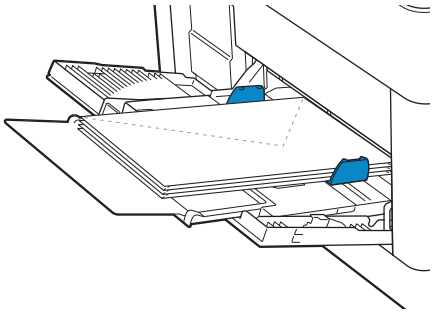

C5

When loading envelopes with the flaps open, load the envelopes with the print side facing up and the bottom edge first into the MPF.

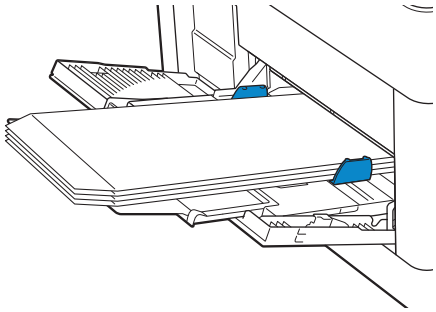

When loading envelopes with the flaps closed, load the envelopes with the print side facing up and the top edge first into the MPF.

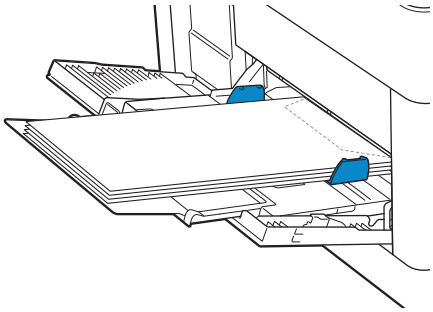

Loading Labels in the MPF

NOTE:

- Use only recommended labels. See "Recommended Labels."

The following guidelines describe how to load labels:

- Do not load labels in the MPF together with other types of paper.
- Use full label sheets. Partial sheets may cause labels to peel off during printing, resulting in a jam.
- Set the paper type to **Label** from the print driver.

- Portrait orientation is preferred, especially when printing bar codes.
- Do not print within 1 mm (0.04 inch) of the die-cut.
- Do not print within 1 mm (0.04 inch) of the edge of the label, of the perforations, or between die-cuts of the label.
- Do not print a label through the printer more than once.

Loading Letterhead, Pre-Printed, and Pre-Punched Paper

Letterhead, pre-printed, and pre-punched paper must be inserted bottom edge first with the print side facing down as shown in the following illustration.

NOTE:

- Make sure that `Letterhead 2 Sided` or `Letterhead Duplex Mode` is set to `Enable`, and `Type` is set to `Letterhead`, `Preprinted`, or `Prepunched` on the operator panel even when printing on a single side. You can also set the same setting using the print driver.

For Tray1 and optional 550-sheet feeder:

- Face up
- Letterhead enters the printer first.

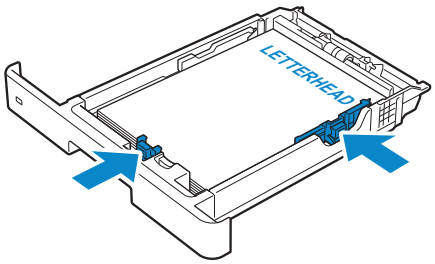

For MPF:

- Face up
- Letterhead enters the printer first.

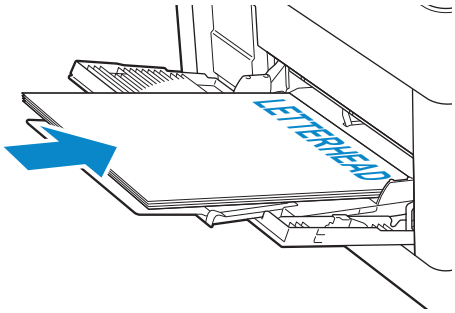

Linking Trays

The printer links the trays when you load the same size and type of print media in them. The first tray is utilized until the print media runs out after which the next tray is used.

NOTE:

- The print media should be the same size and type in each tray.
  The Multipurpose Feeder (MPF) cannot be linked to any of the tray sources.

After loading the selected trays with the same size and type of print media, select the

Paper Type setting in the Tray Settings component for each tray.

To disable tray linking, change the paper type for one of the trays to a unique value.

NOTE:

- If different types of print media of the same size are loaded in the trays, the printer links them if the paper type is not specified in the print driver properties/preferences.

Loading Documents

You can use the Duplex Automatic Document Feeder (DADF) or the document glass to load a document. Using the DADF, you can load up to 50 sheets of 75 g/m^2 (20 lb) paper at a time. Using the document glass, you can load one sheet at a time.

NOTE:

- To get the best scan quality, especially for color or gray scale images, use the document glass instead of the DADF.

Before Loading Documents in the DADF

The following instructions describe how to avoid paper jams:

- Do not use document smaller than 139.7 mm by 139.7 mm (5.5 inches by 5.5 inches) and larger than 215.9 mm by 355.6 mm (8.5 inches by 14 inches)
- Do not use booklets, pamphlets, photographs, transparencies, and documents having other unusual characteristics.
- Do not use carbon or carbon-backed paper, coated paper, onion skin or thin paper, wrinkled or creased paper, curled or rolled paper, and torn paper.
- Do not use documents with staples or paper clips.
- Do not use documents exposed to adhesives or solvent based materials such as glue, ink and correcting fluid.
- Do not use document that you have cut or trimmed.
- Do not use wrinkled, creased, damp, or curled document.
- Do not mix different sizes, weights, or types of document in the DADF.
- Flex, fan, and straighten document before you load it.
- Do not overload the DADF. Make sure that the document stack height does not exceed the maximum height indicated by the load-line labels in the DADF.
- If jams caused by misfeeding paper occur frequently, wipe the DADF feed rollers with a cloth moistened with water.

Loading a Document in the Duplex Automatic Document Feeder (DADF)

1. Adjust the document guides according to the document size that you want to load, and place the document(s) facing up with the top edge of the document(s) first into the DADF.

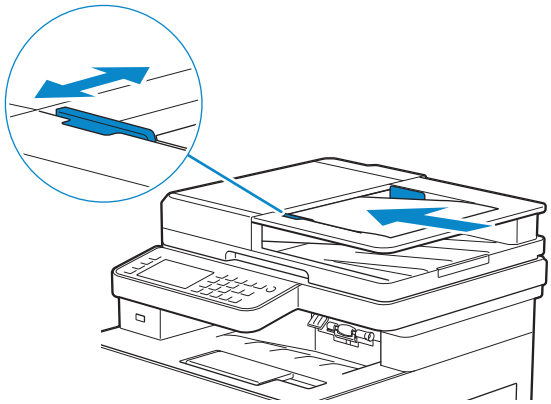

NOTE:

- Overtightening the guides may cause jams.
- Before loading the document(s) on the DADF, straighten the edges of the stack of the document(s).
- Use the document stopper when copying a legal-size document.

Loading a Document on the Document Glass

NOTE:

- Make sure that no document is in the DADF. If any document is detected in the DADF, it takes priority over the document on the document glass.

1 Open the document cover.

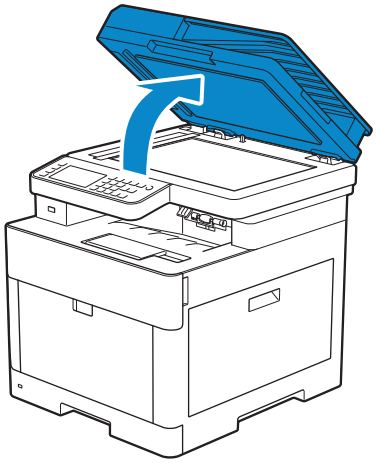

2 Place the document facing down on the document glass and align it with the registration guide on the top left corner of the glass.

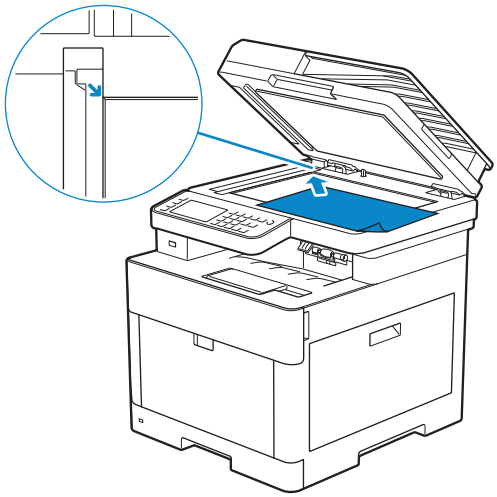

3 Close the document cover.

NOTE:

- Leaving the document cover open while copying may affect the copy quality and increase the toner consumption.
- If you are copying/scanning/faxing a page from a book or magazine, lift the cover until its hinges are caught by the stopper and then close the cover. If the book or magazine is thicker than 30 mm, start copying/scanning/faxing with the cover open.

4

Printing, Copying, Scanning, Faxing, and Dell Document Hub

Printing 208

Copying 217

Scanning 220

Faxing 245

Dell™ Document Hub (Windows® Only) 262

Printing

This chapter covers tips for printing, how to print certain information from the printer, and how to cancel a job.

NOTE:

- Selecting the appropriate print media and loading them properly into the paper tray is key to producing good quality prints and reducing paper jams. See "Print Media Guidelines" and "Loading Print Media."

Sending a Job to Print

NOTE:

- Print settings made from the print driver have precedence over the menu settings made from the operator panel or Tool Box.
- If you are not familiar with a feature in the print driver window, open the online Help for more information.

The following procedure uses a typical Windows® and OS X program as an example.

1. Open the file you want to print.
2. From the **File** menu, select **Print**.
3. Check that the correct printer is selected in the dialog box, and then check and change the print settings in the dialog box.
4. For Windows®, click **Preferences**, adjust print settings that are not available in the dialog box, and then click **OK**.

   For OS X, proceed to step 5.
5. Click **Print**.

NOTE:

- You can switch the paper size loaded in the tray between A4 and letter. Also, you can switch the paper size between A5 and statement. When you want to switch the page size, load the print media of the selected size.
  See "A4<>Letter Switch" and "A5<>Statement Switch."

Canceling a Print Job

You can cancel a job using the operator panel or a computer.

Canceling a Job From the Operator Panel

Canceling a Job While Print Is in Progress

Tap `Stop`.

The print job in progress is canceled.

NOTE:

- All the following jobs are not canceled.

Canceling a Job Before Printing Starts

1. Press the (**Job Status**) button.
2. Tap the job you want to cancel.

3 Tap `Stop` → `Stop Job`.

Canceling a Job From a Computer

Canceling a Job From the Taskbar (Windows® Only)

When you send a job to print, a small printer icon appears in the bottom right corner of the taskbar.

1 Double-click the printer icon.
   A list of print jobs appears in the printer window.

2 Select the job you want to cancel.

3 Press <Delete> on the keyboard.

Canceling a Job From the Dock (OS X Only)

When you send a job to print, the printer icon appears in the Dock.

The following procedure uses OS X 10.10 as an example.

1 Click the printer icon.
   A list of print jobs appears in the printer window.

2 Click the delete job button on the right.

Duplex Printing

The duplex printing feature allows you to print on both sides of a sheet of paper.

NOTE:

- The duplex printing feature does not support thick cover paper, thick coated paper, labels, and envelopes.

Using Duplex Print

For Windows®:

The following procedure uses a typical Windows® program on Windows® 7/Windows® 10 as an example.

1 Open the file you want to print.

2 Open the print dialog box from the program.

3 Select the print driver, and then click **Preferences**.

4 In the **Paper Source** drop-down list box, select a paper tray.

5 In the **Duplex** drop-down list box, select **Flip on Short Edge** or **Flip on Long Edge**.

   NOTE:

   - For details about the **Flip on Short Edge** and **Flip on Long Edge** options, see "Flip on Short Edge" and "Flip on Long Edge."

6 Click **OK**.

7 Click **OK** or **Print**.

For OS X:

The following procedure uses TextEdit on OS X 10.10 as an example.

1 Open the file you want to print.

2 Open the print dialog box from the program.

3 In the **TextEdit** drop-down list box, click **Printer Features**.

4 In the **Feature Sets** drop-down list box, click **Paper Handling**.

5 In the **Duplex** drop-down list box, select **Flip on Short Edge** or **Flip on Long Edge**.

6 Click **Print**.

Using Booklet Print

The booklet print feature prints a document as a booklet. The pages are arranged in the correct order when the printout is collated or stapled.

NOTE:

- When the XML Paper Specification (XPS) or PostScript (PS) driver is used, booklet print is not available.
- You must select **Flip on Long Edge** in the **Duplex** when using the Booklet Print feature.

Flip on Long Edge	Assumes binding along the long edge of the page (left edge for portrait orientation and top edge for landscape orientation). The following illustration shows long-edge binding for portrait and landscape pages:

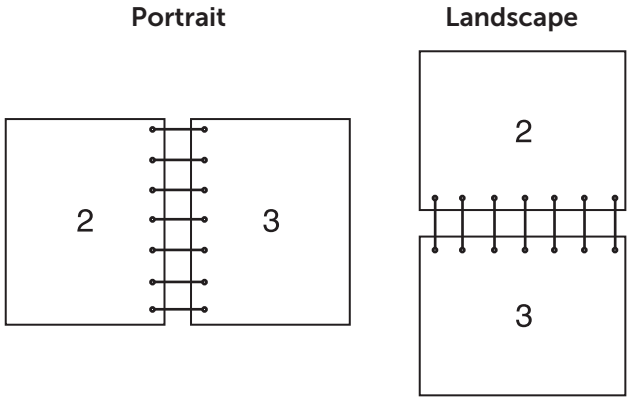

Flip on Short Edge	Assumes binding along the short edge of the page (top edge for portrait orientation and left edge for landscape orientation). The following illustration shows short-edge binding for portrait and landscape pages: 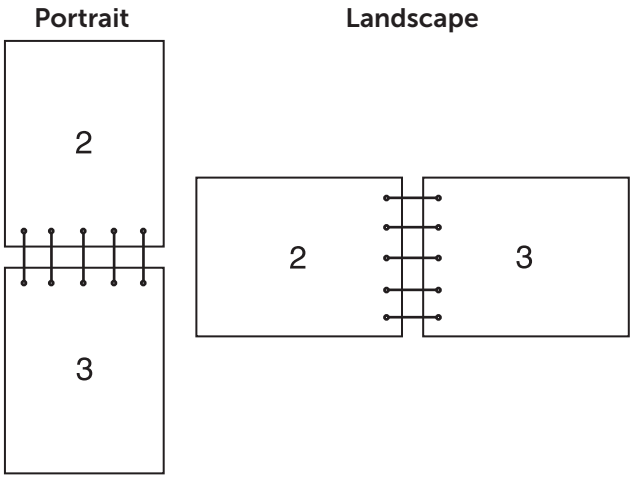

Using Stored Print

When you send a job to the printer, you can specify in the print driver to store the job in the memory. When you are ready to print the job, go to the printer and use the operator panel to identify which job in the memory you want to print.

NOTE:

- The data in the memory is cleared when the printer is turned off.
- The Stored Print feature is available when:
  - The RAM disk is enabled in the printer menu.
  - **RAM Disk** is set to **Available** in the print driver.

Overview

The Stored Print feature includes the following job types.

Read each description to select optimum job type for your print job.

If you want to print confidential documents, see "Secure Print" and "Private Mail Box Print."

If you want to store the print job in the printer for re-printing, see "Private Mail Box Print" and "Public Mail Box Print."

If you want to prevent large number of misprinted copies, see "Proof Print."

Secure Print

You can temporarily store print jobs secured with a password in the memory. Users with the password can print them from the operator panel. This feature can be used to print confidential documents. A stored print job is deleted after you print it or at a designated time.

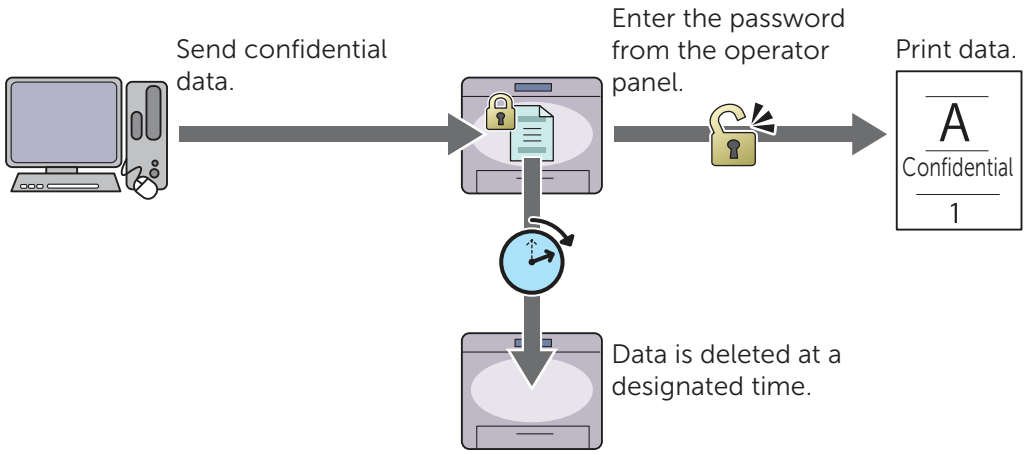

Private Mail Box Print

You can store print jobs in the printer for re-printing with a password. The stored jobs remain in the printer until you delete them from the operator panel. Only users with the password can print them from the operator panel. This feature can be used to print confidential documents.

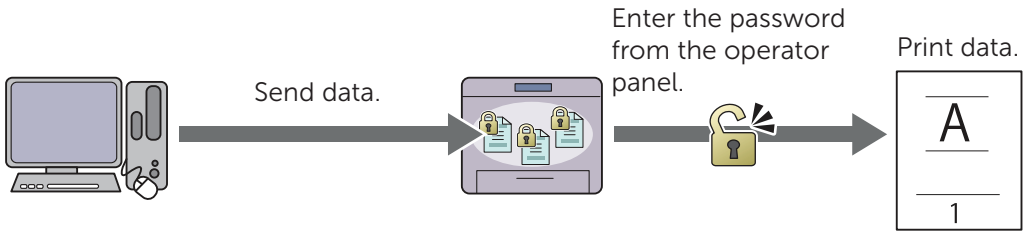

Public Mail Box Print

You can store print jobs in the printer for re-printing without a password. The stored jobs remain in the printer until you delete them from the operator panel. Any user can print them from the operator panel.

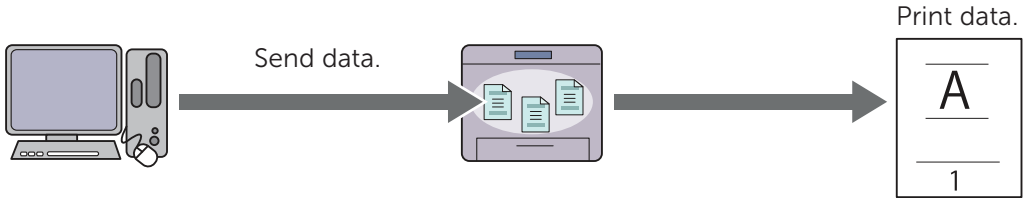

Proof Print

The collated print job is stored in the memory, but a single copy is printed so you can check the print result. If you do not have problems with the print result, you can choose to print more copies. This prevents large number of misprinted copies.

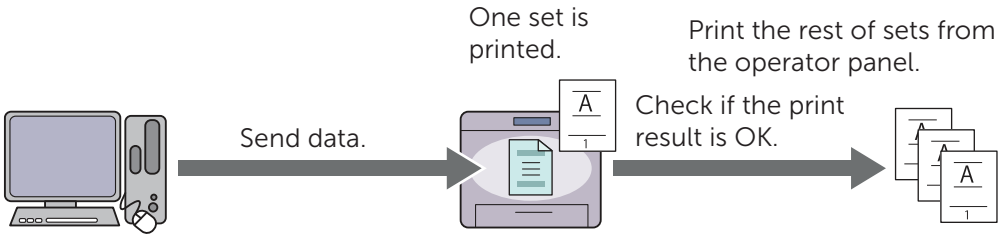

Procedures for Printing Stored Print

NOTE:

- The Stored Print feature is not available when a print job is too large for the available memory.
- The Stored Print feature is available when using the Printer Control Language (PCL) or PostScript (PS) driver.

Storing Print Jobs With the Print Driver

To use the Stored Print feature, you need to select **Secure Print**, **Proof Print**, **Private Mailbox**, or **Public Mailbox** from **Job Type** in the **General** tab of the print driver. The job is stored in the memory until you request to print it from the operator panel.

NOTE:

- You must specify a password for the Secure Print and Private Mail Box Print jobs.
- If a document name is not assigned to your print job in the print driver, the job's name is identified using the printer's time and date of submission to distinguish it from other jobs you have stored under your name.

Printing the Stored Jobs From the Operator Panel

1 Press the (**Home**) button.

2 Tap → `Print`.

3 Select a job type.

If the desired job type is not displayed, swipe the screen.

4 Select the desired user ID.

If the desired document is not displayed, tap ▼ or ▲ to scroll through the screen.

If you have selected `Secure Print` or `Private Mailbox` in step 3, enter the password using the number pad, and then tap `OK`.

NOTE:

- If you enter an invalid password, the message `Incorrect password Try again.` appears. Tap `Close` to return to the screen for entering the password.

5 Select the desired document.

If the desired document is not displayed, tap ▼ or ▲ to scroll through the screen.

To specify the number of copies, tap `Quantity`.

NOTE:

- For Secure Print, `Quantity` is not available.

6 For Secure Print, tap `Print and Delete`.

For Private Mailbox Print, tap `Print`.

NOTE:

- For Secure Print, the data in the memory is deleted after printing.
- For Private Mailbox Print, you can delete the data in the memory after printing if you select the `Print and Delete` check box.

7 Tap `OK`.

The stored job will be printed.

Deleting Stored Jobs

With Secure Print, a job that has been stored is deleted after printing or deleted at a designated time entered on the operator panel.

For other jobs, these jobs remain stored until you delete them from the operator panel.

To delete the stored jobs:

1 Press the (**Home**) button.

2 Tap → `Print`.

3 Select a job type.

If the desired job type is not displayed, swipe the screen.

4 Select the desired user ID.

If the desired document is not displayed, tap ▼ or ▲ to scroll through the screen.

If you have selected `Secure Print` or `Private Mailbox` in step 3, enter the password using the number pad, and then tap `OK`.

NOTE:

- If you enter an invalid password, the message `Incorrect password Try again.` appears. Tap `Close` to return to the screen for entering the password.

5 Select the desired document.

If the desired document is not displayed, tap ▼ or ▲ to scroll through the screen.

6 Tap `Delete`.

Printing From USB Flash Drive

The USB Direct Print feature allows you to print files stored in a USB flash drive without using a computer.

CAUTION:

- **To prevent damage to the printer, do not connect any device other than a USB flash drive to the front USB port of the printer.**
- **Do not remove the USB flash drive from the front USB port until the printer has finished printing.**

NOTE:

- If the Functions Control setting is set to `On (Password)`, you need to enter the four-digit password to use the function. If the Functions Control setting is set to `Off`, the function is disabled and the menu is not displayed on the screen. See "Functions Control."

Supported USB Flash Drive

For the front USB port of the printer, you can use a USB flash drive with the following specification:

- USB 2.0 and 1.1
- Type A connector
- Metal shielded
- FAT16, FAT32, or VFAT file system

NOTE:

- If the USB flash drive is formatted in a file system other than the above, the printer may not detect the USB flash drive.
- A USB flash drive with authentication feature and some brands of USB flash drive cannot be used with this printer.

Supported File Formats

Files in the following file formats can be printed directly from a USB flash drive:

- PDF
- TIFF
- JPEG

Printing a PDF/TIFF or JPEG File in a USB Flash Drive

1 Press the (**Home**) button.

2 Insert a USB flash drive to the front USB port of the printer.

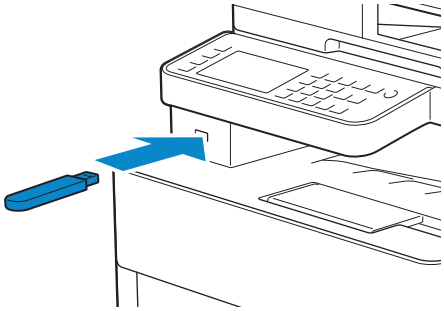

3 Tap `Print PDF/TIFF` or `Print JPEG`.

4 Select the desired file.

If the desired file is not displayed, swipe the screen or tap folders.

NOTE:

- Only the following characters are displayed on the touch panel:
  A B C D E F G H I J K L M N O P Q R S T U V W X Y Z 0 1 2 3 4 5 6 7 8 9 $ % ' ' - @ {} ~ ! # ( ) & _ ^
- Up to 10 PDF/TIFF or 100 JPEG files can be selected and printed in display order.

5 Tap , and then check and change the print settings.

See "Print Settings."

6 Tap `Print`.

CAUTION:
- **Do not remove the USB flash drive while the printer is accessing the drive. The data in the drive may be destroyed, or the drive itself may be damaged and become unusable.**

NOTE:
- Color printing is secured with a password if the Functions Control setting for `USB Direct Print` is set to `On(Color Password)`. If you set `Output Color` to `Full Color` and the Functions Control setting for `USB Direct Print` to `On(Color Password)`, you are required to enter the four-digit password.
- Only PDF/TIFF or JPEG files created using the scan function of the printer can be printed through the USB Direct Print feature.

7 Remove the USB flash drive from the printer.

CAUTION:
- **Make sure that the printer is not accessing the USB flash drive.**

Printer Settings

You can change most of the print settings from the program you are printing from.

Settings from the program update the default system settings for the printer. Settings from the print driver only apply to the job that you are currently sending to the printer.

If you cannot change a setting from the program, use the operator panel, Tool Box on the Dell Printer Hub/Dell Print Management Tool, or the Dell Printer Configuration Web Tool. Changing a system setting from the operator panel, Tool Box, or Dell Printer Configuration Web Tool makes that setting the user default.

You can verify the detailed system settings by printing a system settings report. For details about how to print a system settings report, see "Report / List."

You can reset settings to their default values from the operator panel.
See "Resetting Defaults."

To specify your own default settings:

1 Press the (**Information**) button.
If `Panel Lock Control` is set to `Enable`, enter the password. See "Panel Lock."

2 Tap the `Tools` tab → `Admin Settings`.

3 Tap `PCL`, `PS`, or `PDF`.

4 Select the desired menu item.
If the desired menu item is not displayed, tap ▼ or ▲ to scroll through the screen.

5 Select the desired setting or enter the value, and then tap `OK`.

6 Repeat steps 4 and 5 as needed.

Copying

NOTE:

- If the Functions Control setting is set to `On (Password)`, you need to enter the four-digit password to use the function. If the Functions Control setting is set to `Off`, the function is disabled and the menu is not displayed on the screen. See "Functions Control."

Making Copies From the Document Glass

NOTE:

- A computer connection is not required for copying.
- Remove any documents from the Duplex Automatic Document Feeder (DADF) before copying from the document glass.
- Contaminants on the document glass may cause black spots on the copy output. For best results, clean the document glass before use. See "Cleaning the Scanner."

1. Place a single document facing down on the document glass, and then close the document cover.

   See "Loading Documents."

2. Press the (**Home**) button.
3. Tap → `Copy`.
4. Check and change the copy settings.

   See "Copy."

5. In `Quantity`, tap – or + to specify the number of copies.
6. Tap `Copy`.

   NOTE:

   - To cancel a copy job, tap `Stop` at any time while scanning a document.

Making Copies From the DADF

CAUTION:

- **Do not load more than 50 sheets into the DADF or allow more than 50 sheets to be fed to the document output tray. The document output tray should be emptied before it exceeds 50 sheets or your documents may be damaged.**

NOTE:

- A computer connection is not required for copying.

1. Load the document(s).

   See "Loading Documents."

2. Press the (**Home**) button.
3. Tap → `Copy`.
4. Check and change the copy settings.

   See "Copy."

5. In `Quantity`, tap – or + to specify the number of copies.

6 Tap Copy.

NOTE:

- To cancel a copy job, tap Stop at any time while scanning a document.

Using the ID Copy

NOTE:

- If the Functions Control setting is set to Disable, the function is disabled and the menu is not displayed on the screen. See "Functions Control."

You can copy both sides of an ID card on one side of a single sheet of paper in its original size by tapping ID Copy on the touch panel. This feature helps to show both sides of an ID card in one page in its original size.

1 Place an ID card facing down on the document glass, and then close the document cover.

   See "Loading Documents."

2 Press the (**Home**) button.

3 Tap → ID Copy.

4 Check and change the copy settings.

   See "Copy."

5 In Quantity, tap – or + to specify the number of copies.

6 Tap Copy.

   NOTE:

   - Color copy is secured with a password if the Functions Control setting for Copy is set to On(Color Password). If you set Output Color to Full Color and the Functions Control setting for Copy to On(Color Password), you are required to enter the four-digit password.

   After the front side of the ID card is scanned, the screen prompts you to turn over the card.

   To copy the back side:

   a Turn the ID card over.

   b Tap Continue.

   To copy only one side:

   a Tap Print Now.

Changing the Default Copy Settings

The default settings of the copy menu options such as Output Color, Select Tray, and Darken/Lighten can be set to the most frequently used modes. When you copy a document, the specified default settings are used unless they are changed using the operator panel.

The settings on Default Settings will be reflected when you create a new tile. If you change the settings on Default Settings after creating the new tile, it does not affect the settings of the tile you created earlier. See "Adding a New Tile."

NOTE:

- You can set the same setting using the Tool Box on the Dell Printer Hub/Dell Print Management Tool or Dell Printer Configuration Web Tool. See the help on the Tool Box or "Dell™ Printer Configuration Web Tool."

To specify your own default settings:

1 Press the ⓘ (**Information**) button.

2 Tap the `Tools` tab → `Default Settings` → `Copy Defaults`.

3 Select the desired menu item.
If the desired menu item is not displayed, tap ▼ or ▲ to scroll through the screen.

4 Select the desired setting or enter the value, and then tap `OK`.

5 Repeat steps 3 and 4 as needed.

Scanning

NOTE:

- If the Functions Control setting is set to `On (Password)`, you need to enter the four-digit password to use the function. If the Functions Control setting is set to `Off`, the function is disabled and the menu is not displayed on the screen. See "Functions Control."

Scanning Overview

The printer provides several ways to scan your document. There are two main scanning types. One is operated on the printer side without using the scanner driver, and the other is operated on the computer side using a software and the scanner driver.

The following illustration shows overview for each scanning type.

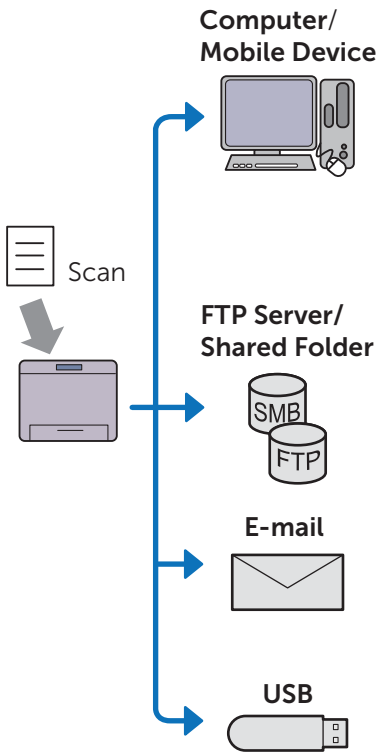

Operate from the Printer
"Scanning to a Computer With a USB Connection"
"Scanning to a Computer With a Network Connection"

Operate from the Computer/Mobile Device
"Scanning From a Computer Using Web Services on Devices (WSD)"
"Scanning Using the TWAIN Driver"
"Scanning Using the Windows® Image Acquisition (WIA) Driver"
"Scanning Using Wi-Fi Direct"

"Scanning to a Computer or Server With SMB/FTP"

"Sending a Scanned Data via E-Mail"

"Scanning to a USB Flash Drive"

The resolution setting to use when you scan an item depends on the item type and how you plan to use the image or document after you scan it to your computer. For the best results, use these recommended settings.

Type	Resolution
Documents	300 dpi black-and-white or 200 dpi grayscale or color
Documents of poor quality or that contain small text	400 dpi black-and-white or 300 dpi grayscale
Photographs and pictures	100–200 dpi color or 200 dpi grayscale
Images for an inkjet printer	150–300 dpi
Images for a high-resolution printer	300–600 dpi

Scanning above the recommended resolutions may exceed the capabilities of the

program. To scan above the recommended resolutions, preview (or pre-scan) and crop the image to reduce the size before scanning the image.

Tips for Easy Network Scanning

- The network scanning with the Scan to Computer feature is recommended if you are not familiar with the network scanning setup. It provides the simple and easy steps for your convenience. For details, see "Scanning to a Computer With a Network Connection."
- Before using the Scan to Network Folder feature, configure the network connection details using the Address Book Editor if you are not familiar with the setup using the Dell Printer Configuration Web Tool.

  The Address Book Editor helps to register the scanning destination details to the printer.

Scanning to a Computer With a USB Connection

You can send scanned data from the operator panel to a computer connected via USB cable. The scanned data is saved in the **Documents** folder for Windows® or on the desktop for OS X by default. To change the location to save, see "Changing the Location to Save the Scanned Data."

NOTE:

- You must connect your computer via USB for selecting the Scan to Computer feature from the operator panel. Network connection is not supported.
- This feature is supported on both Windows® and OS X.

1. Load the document(s).

   See "Loading Documents."
2. Press the (**Home**) button.
3. Tap → `Scan to Computer`.
4. Select a computer.

   If the desired computer is not displayed, swipe the screen.
5. Check and change the scan settings.

   See "Scan to Computer."
6. Tap `Scan`.

Scanning to a Computer With a Network Connection

If the printer is connected to a computer via the Scan to Computer network using Web Services on Devices (WSD), you can send scanned data to a computer.

NOTE:

- You need to setup connection using Web Services on Devices (WSD).
- Web Services on Devices (WSD) is supported only on Windows Vista®, Windows® 7, Windows® 8, Windows® 8.1, and Windows® 10.

Printer Setup for Scan to Web Services on Devices (WSD)

Setup the printer and computer for connection using Web Services on Devices (WSD).

Checking the Printer Setting

To use this scanning method, make sure that the Web Services on Devices (WSD) is enabled from the operator panel of the printer or on the Dell Printer Configuration Web Tool. See "Port Settings" or "Protocols."

Setting Up the Computer

NOTE:

- For Windows® 8, Windows® 8.1, and Windows® 10, the computer automatically connects the printer using Web Services on Devices (WSD). There is no need to install the printer manually.

The following procedure uses Windows® 7 as an example.

1. Click **Start** → **Computer** → **Network**.
2. Right-click the icon for the printer, and then click **Install**.

   The printer is connected using Web Services on Devices (WSD).
3. Right-click the icon for the printer, and then click **Scan profiles**.
4. Specify the various settings of the profile, including the **Source** where the documents are loaded.

Scanning and Sending Images to the Computer

1. Load the document(s).

   See "Loading Documents."
2. Press the (**Home**) button.
3. Tap → `Scan to Computer`.

   NOTE:

   - Whether to scan from the DADF or from the document glass can be specified in the scan profile. Make sure to specify the scan profile accordingly if you want to scan the document from the DADF.
4. Select a computer.

   If the desired computer is not displayed, swipe the screen.

5. Specify the type of scan.

   If the desired type is not displayed, swipe the screen.

   For details about the type of scan, see "Scan to Computer."

6 Tap `Scan`.

Changing the Location to Save the Scanned Data

Use Dell Printer Hub (Dell H625cdw and Dell H825cdw) or Dell Print Management Tool (Dell S2825cdn) to change the output destination of the obtained image files and to select whether to open the image files using the related program.

NOTE:

- Dell Printer Hub and Dell Print Management Tool are supported on only Windows® 7 or later.

To open Dell Printer Hub:

The following procedure uses Windows® 7, Windows® 10, and OS X 10.10 as examples.

For Windows® 7:

Click **Start** → **All Programs** → **Dell Printers** → **Dell Printer Hub**.

For Windows® 10:

Click the Start button → **Dell Printer Hub**.

For OS X 10.10:

Click **Finder** → **Applications** → **Dell** → **Dell Color Cloud Multifunction Printer - H625cdw**/**Dell Color Cloud Multifunction Printer - H825cdw**/**Dell Color Smart Multifunction Printer - S2825cdn**, and then double-click **ScanButton Manager**.

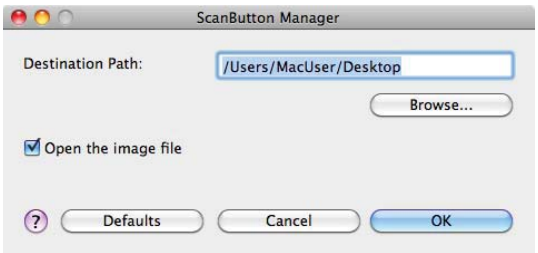

Scanning From a Computer Using Web Services on Devices (WSD)

If the printer is connected to a computer via network using Web Services on Devices

(WSD), you can scan documents from the computer.

NOTE:

- To scan from the computer using Web Services on Devices (WSD), you need to setup connection using Web Services on Devices (WSD).
- Web Services on Devices (WSD) is supported only on Windows Vista®, Windows® 7, Windows® 8, Windows® 8.1, and Windows® 10.

Preparations for Scanning From the Computer

The same preparations are necessary as in using the Scan to Computer feature. See "Scanning to a Computer With a Network Connection."

Scanning From the Computer

The following procedure uses Windows® 7 and Windows® 10 as example.

1. Load the document(s).

   See "Loading Documents."

2. Click **Start** → **Devices and Printers**.

   For Windows® 10: Right-click the Start button, and then click **Control Panel** → **Hardware and Sound** → **Devices and Printers**.

3. Right-click the printer, and then select **Start scan**.

4. Specify the necessary settings for scanning, and then click **Scan**.

   NOTE:

   - When you use Windows Vista®, use the drawing software such as Microsoft® Photo Gallery, select the printer connected using the Web Services on Devices (WSD), and start scanning.

Scanning Using the TWAIN Driver

With the TWAIN driver, you can import scanned images to a software such as Adobe® Photoshop®.

NOTE:

- Both USB and Network connections are supported.
- This feature is supported on Windows® and Mac OS X 10.7 or later.
- To check and set the IP address of the printer, or set the password for Functions Control feature when `PC Scan` is set to `On (Password)`. For details, see "Managing the Scanner."

The following procedure uses typical program that supports TWAIN as an example.

1. Load the document(s).

   See "Loading Documents."

2. Start the graphic software that supports TWAIN, such as Adobe® Photoshop®.

3. Select the scanner from the TWAIN menu on the graphic software, specify the necessary settings, and then start scanning on the window such as shown below.

   For details on operating the graphic software, see the manuals of your software.

   For Windows®:

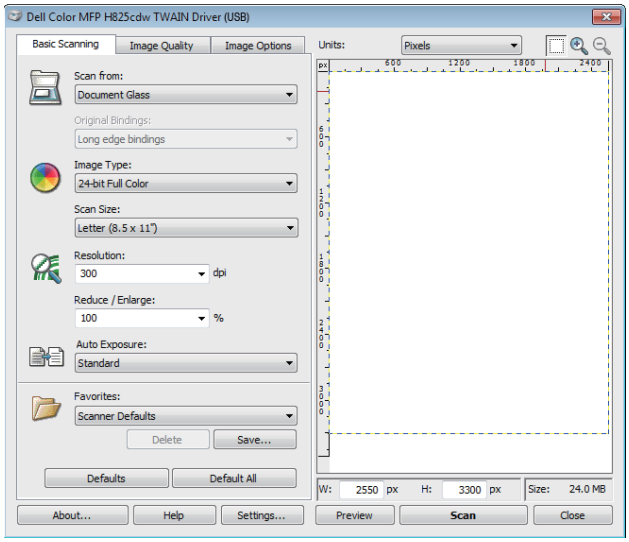

For OS X:

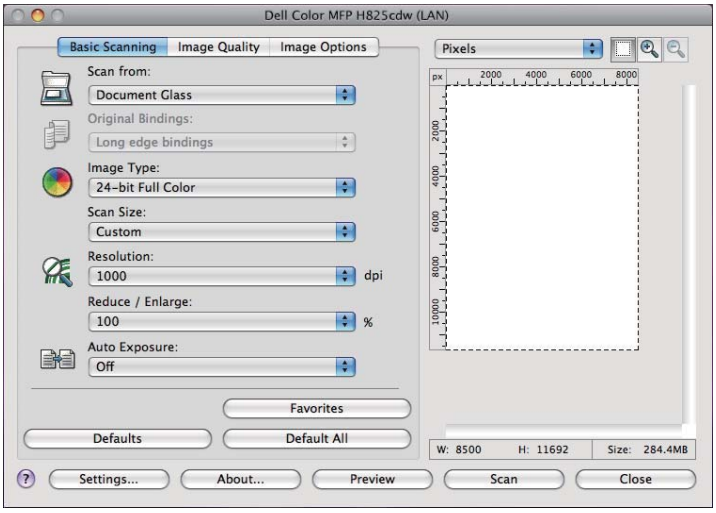

NOTE:

- The screen image may vary depending on the operating system.

Scanning Using the Windows® Image Acquisition (WIA) Driver

Windows® Image Acquisition (WIA) is one of the standard components provided by Windows® XP and later operating systems and works with digital cameras and scanners. Unlike the TWAIN driver, the Windows® Image Acquisition (WIA) driver allows you to scan an image and easily manipulate those images without using additional software.

With the Windows® Image Acquisition (WIA) driver, you can import scanned images to Microsoft® programs such as Windows® Photo Gallery and Microsoft® Paint.

NOTE:

- Both USB and Network connections including Web Services on Devices (WSD) are supported.
- The Windows® Image Acquisition (WIA) driver is supported only on Windows® computers.
- To check and set the IP address of the printer, or set the password for Functions Control feature when `PC Scan` is set to `On (Password)`. For details, see "Managing the Scanner."

Scanning an Image From the Drawing Software

The following procedure uses Windows® 7 as an example.

1 Load the document(s).

See "Loading Documents."

2 Start the drawing software, such as Microsoft® Paint for Windows®.

NOTE:

- When using Windows Vista® or Windows Server® 2008, use Windows® Photo Gallery instead of Microsoft® Paint.
- When using programs that utilize Windows® Image Acquisition (WIA) 2.0, such as Windows® Fax and Scan on Windows Vista®, Windows® 7, Windows® 8, Windows® 8.1, and Windows® 10, the **Feeder (Scan both sides)** option can be selected for duplex scanning.

3 Click the **Paint** button → **From scanner or camera**.

The following image uses Dell H825cdw as an example.

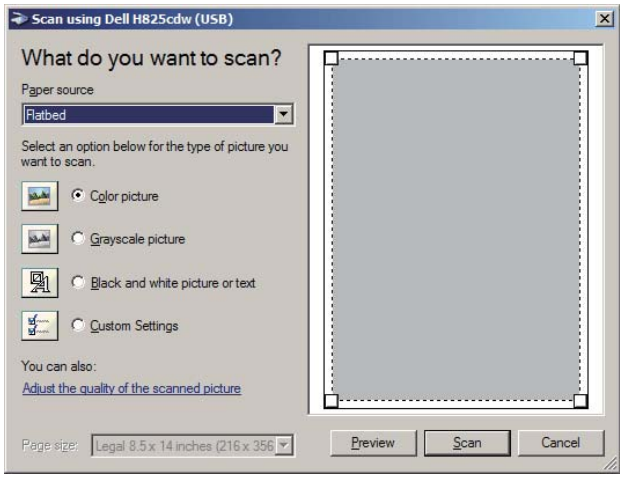

NOTE:

- The screen image may vary depending on the operating system.

4 Select your desired type of picture, and then click **Adjust the quality of the scanned picture**.

The **Advanced Properties** dialog box appears.

5 Click the desired properties → **OK**.

6 Click **Scan** → **Save**.

Scanning Using Wi-Fi Direct

This section provides information for Wi-Fi Direct scanning. Wi-Fi Direct allows your mobile devices such as computers, smartphones, and tablets, to connect to the printer directly via a Wi-Fi network. With Wi-Fi Direct, you can scan documents from your mobile devices directly without an access point or a wireless router.

To setup and connect using Wi-Fi Direct, See "Setting Up Wi-Fi Direct."

NOTE:

- Wi-Fi Direct is available on Dell H625cdw and Dell H825cdw.
- The maximum number of mobile devices that can be connected via the Wi-Fi Direct network is 3.
- You cannot connect your mobile device to the Internet via the printer's Wi-Fi Direct network.
- Depending on the mobile device, the channel used to connect the mobile device to the printer via Wi-Fi Direct may differ from the channel used by the printer to connect to a network via Wi-Fi infrastructure mode. In such a case, simultaneous connection with Wi-Fi Direct and Wi-Fi infrastructure mode may not work properly.
- The printer connected with Wi-Fi Direct supports the following protocols;
  LPD, Port9100, WSD*, Bonjour (mDNS), SNMPv1/v2c, Dell Printer Configuration Web Tool, TWAIN, WIA, ICA.
  * WSD stands for Web Services on Devices.

Scanning via Wi-Fi Direct

The scanning procedure varies depending on the mobile device and the application you are using. Refer to the manual supplied with your mobile device or application to scan.

Scanning to a Computer or Server With SMB/FTP

You can scan and send the scanned data to a shared folder on a computer or an FTP server.

NOTE:

- This feature does not require a network scanner driver.

Overview

The Scan to Network Folder feature allows you to send the scanned data to a computer or FTP server.

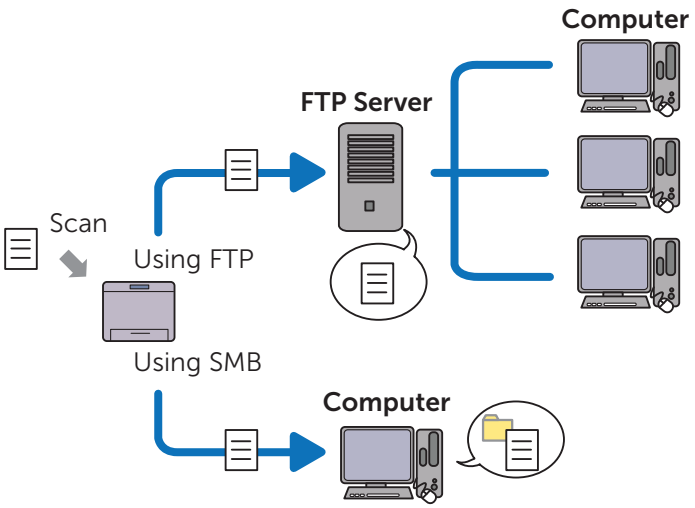

Required Operating Systems:

For FTP:

NOTE:

- For details about how to configure the FTP service, refer to the manual supplied with the software.
- Windows Vista® supports IPv4 only.

- Windows®
  Windows Server®
  FTP service of Microsoft® Internet Information Services
- Mac OS X 10.7 or later operating systems
  FTP service of Mac OS X

For SMB:

This feature is supported on Windows Server® 2008 or later and Mac OS X 10.7 or later.

Overview for Scanning to an FTP Server

The following is a typical setup flow for sending scanned data to an FTP server:

1. Set SMB/FTP Destination into the Address Book.
   See "Setting SMB/FTP Destination Into the Address Book."
2. Send the scanned data on the network.
   See "Sending the Scanned Data on the Network."

Overview for Scanning to a Shared Folder Using SMB

NOTE:

- The setup for Scan to Network Folder via SMB can be configured easily with the bundled Address Book Editor utility.
  For details about Address Book Editor, see "Using Address Book Editor."
- Scan to Network Folder can be also accomplished with the Web Services on Devices (WSD) function.
  For details about scanning using the Web Services on Devices (WSD) function, see "Scanning to a Computer With a Network Connection" and "Scanning From a Computer Using Web Services on Devices (WSD)."

The following is a typical setup flow for sending scanned data to a shared folder using SMB:

1. Set a user account.
   See "Setting a User Account (SMB Only)."
2. Create a shared folder.
   See "Creating a Shared Folder (SMB Only)."
3. Set SMB/FTP Destination into the Address Book.
   See "Setting SMB/FTP Destination Into the Address Book."
4. Send the scanned data on the network.
   See "Sending the Scanned Data on the Network."

Setting a User Account (SMB Only)

To send scanned data to a SMB shared folder, it is necessary to have a shared folder on a computer. To create a shared folder, a user account with a valid password is required.

For Windows®:

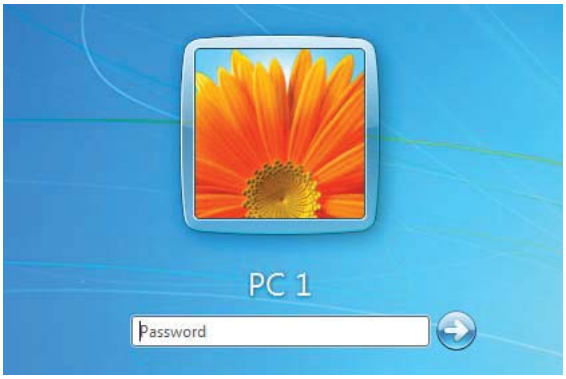

If the user account you are going to use does not have a login password, set a password with the following procedure.

After checking the login user name and password of the user account, proceed to "Creating a Shared Folder (SMB Only)."

The following procedure uses Windows® 7, Windows® 10, and OS X 10.10 as examples.

For Windows® 7:

1 Click **Start** → **Control Panel** → **User Accounts and Family Safety** → **User Accounts** → **Create a password for your account**.

2 Add in a password for your user login account.

For Windows® 10:

1 Right-click the Start button, and then click **Settings**.

2 Click **Accounts** → **Sign-in options** → **Add** under **Password**.

3 Add in a password for your user login account.

For OS X 10.10:

1 Click **System Preferences** → **Users & Groups** → **Change Password**.

2 Enter a password for your user login account in **New password**.

3 Re-enter the password in **Verify**.

Creating a Shared Folder (SMB Only)

Create a shared folder to store the scanned data from the printer.

The following procedure uses Windows® 7, Windows® 10, and OS X 10.10 as examples.

For Windows® 7 and Windows® 10:

1 Create a folder in the desired directory on your computer.
MyShare is used as an example folder name in this procedure.

2 Right-click on the folder, and then click **Properties**.
The **Properties** dialog box appears.

3 Click the **Sharing** tab → **Advanced Sharing**.

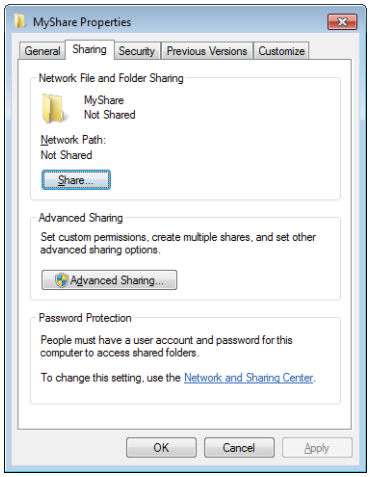

4 Select the **Share this folder** check box.

5 Enter a shared name in the **Share name** box.

NOTE:

- Write down the shared name as you need to use this name in the next setting procedure.

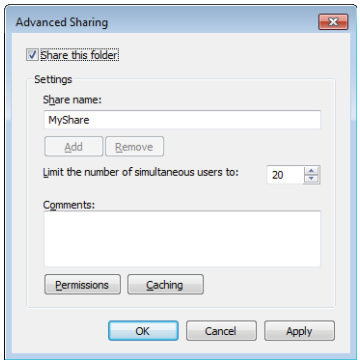

6 Click **Permissions** to create a write permission for this folder.

7 Click **Add**.

8 Search user login name by performing either of the following:

- Click **Advanced**, and then search user login name.
- Enter the user login name in the **Enter the object names to select** text box, and then click **Check Names**.

Myself is used as an example login name in the following illustration.

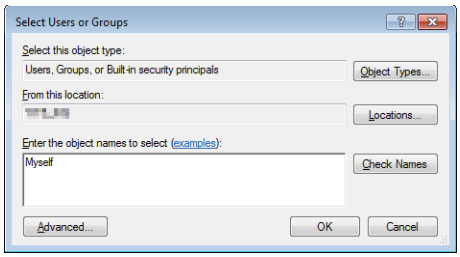

9 Click **OK**.

10 Click the user login name that you have just entered, and then select the **Full Control** check box.

This permits the document to be sent into this folder.

NOTE:

- Do not use **Everyone** as the user login name.

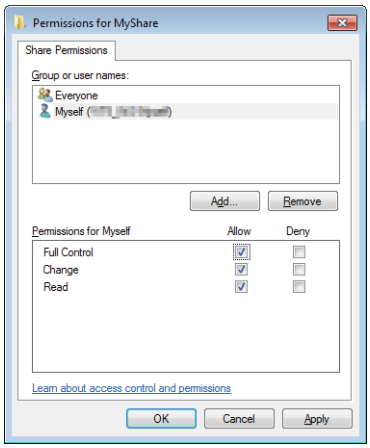

11 Click **OK**.

NOTE:

- To add sub-folders, create new folders in the shared folder you have created.
  For example:
  Folder name: *MyShare*, Second-level folder name: *MyPic*, Third-level folder name: *John*
  You should now see *MyShare\MyPic\John* in your directory.

When you are finished creating a shared folder, proceed to "Setting SMB/FTP Destination Into the Address Book."

For OS X 10.10:

1 Create a folder in the desired directory on your computer.

MyShare is used as an example folder name.

2 Click the created folder → **File** → **Get Info**.

3 Select the **Shared folder** check box.

4 Open **System Preferences**, and then click **Sharing**.

5 Select the **File Sharing** check box, and then click **Options**.

6 Select the **Share Files and folders using SMB** and account name check boxes.

7 Click **Done**.

When you are finished creating a shared folder, proceed to "Setting SMB/FTP Destination Into the Address Book."

Setting SMB/FTP Destination Into the Address Book

You can register the connection details for SMB and FTP server in the address book using Dell Printer Configuration Web Tool or Address Book Editor.

Before entering the destination information, make sure that you have the IP address of your computer ready. See "Confirming the IP Address of Your Computer."

After you finish registering the destination information of the SMB or FTP server, proceed to "Sending the Scanned Data on the Network."

Confirming the IP Address of Your Computer

Perform the following procedure to check the IP address of the computer.

For Windows®:

The following procedure uses Windows® 7/Windows® 10 as an example.

1 Click **Start** → **All Programs** → **Accessories** → **Run**.
For Windows® 10: Right-click the Start button, and then click **Run**.

2 Enter "**cmd**" in the text box, and then click **OK**.
A command prompt window opens.

3 Enter `ipconfig`, and then press <Enter> on the keyboard.

4 Write down the IP address.

For OS X:

The following procedure uses OS X 10.10 as an example.

1 Open **System Preferences**, and then click **Network**.
The IP address is displayed under **Status**.

2 Write down the IP address.

Using Dell Printer Configuration Web Tool

1 Start the Dell Printer Configuration Web Tool.
See "Starting the Dell Printer Configuration Web Tool."

2 Click **Address Book**.

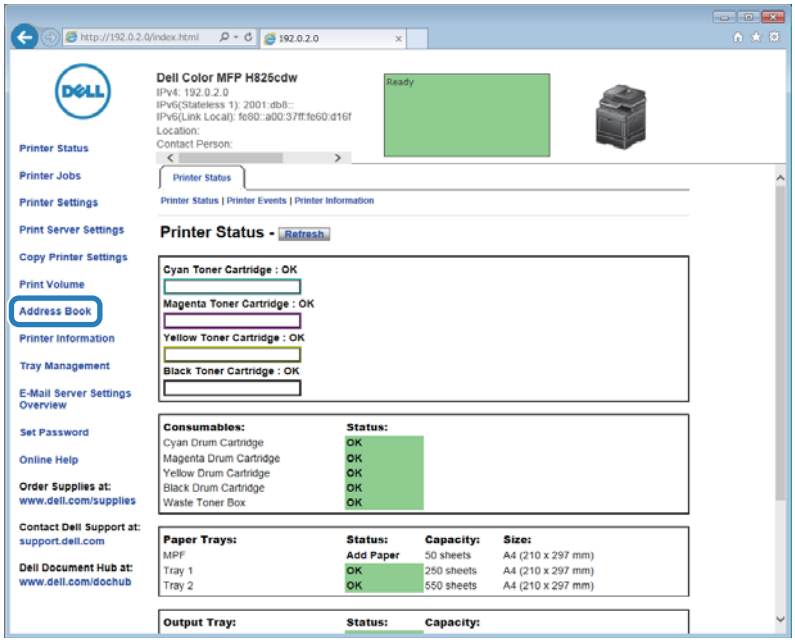

If a security login dialog box appears, enter user name and password.

NOTE:

- The default user name is "admin," and the default password is left blank (NULL).

3 Click the **Server Address** tab → **Create** of an ID.

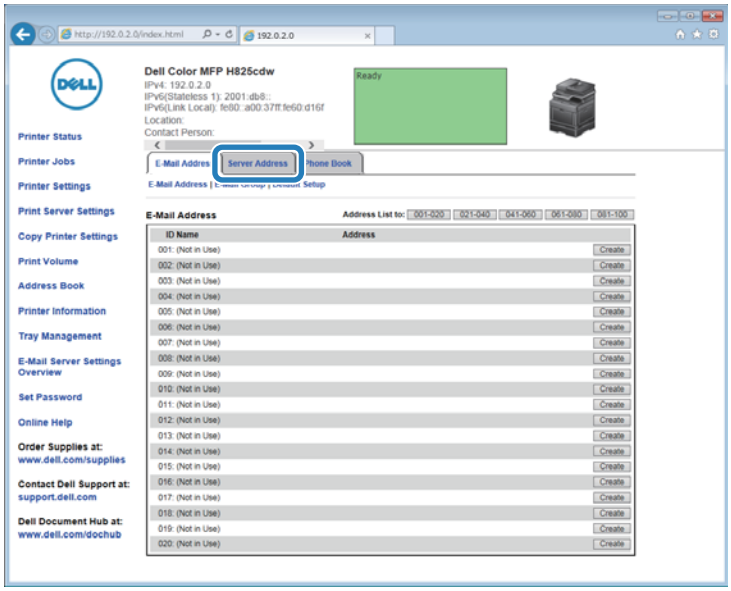

The **Server Address** page appears.

4 Enter the information as follows to fill in the fields.

Name	Enter a name of your choice. This appears as the name for the Server Address in the Address Book.
Server Type	Select **FTP** to send documents to an FTP server. Select **SMB** to send documents to a shared folder on your computer using Server Message Block (SMB).

Server Address	Enter the name or IP address of the server or computer. Example: • For FTP: Server name: *myhost.example.com* (myhost: host name, example.com: domain name) IP address: *192.0.2.1* • For SMB: Computer name: *myhost* IP address: *192.0.2.1*
Share Name	Enter the name of the shared folder. See "Creating a Shared Folder (SMB Only)." For SMB only. • Example: *Share*, *Sharefolder*
Server Path	Enter the path of the sub-folder within the shared folder. If you have not created a sub-folder, leave this blank. When entering the sub-folder path, make sure that the sub-folder is already created. Do not enter the name of the shared folder. Example: Shared Folder name: *MyShare*, Second-level folder name: *MyPic* Enter "***MyPic***". If you have created a sub-folder within a sub-folder, separate each sub-folder name with a backslash (SMB) or forward slash (FTP). Example: Shared Folder name: *MyShare*, Second-level folder name: *MyPic*, Third-level folder name: *John* • For SMB enter "***MyPic\John***". • For FTP enter "***MyPic\John***".
Server Port Number	Enter the Server Port Number. If you are unsure, you can enter the default value of 21 for FTP or 139 for SMB. Available ports are: FTP: 21, 5000 - 65535 SMB: 139, 445, 5000 - 65535
Login Name	Enter the user account name to allow access to a shared folder on your computer or to an FTP server. • For FTP: Contact your system administrator. • For SMB: Windows® login name that you have specified in "Setting a User Account (SMB Only)."
Login Password	Enter the password corresponding to the above login name. • For FTP: Contact your system administrator • For SMB: Empty password is not valid in the Network (Computer) feature. Make sure that you have a valid password for the user login account. See "Setting a User Account (SMB Only)."
Re-enter Password	Re-enter your password.

5 Click **Apply New Settings**.

Using Address Book Editor

The following procedure uses OS X 10.10 as an example.

NOTE:

- For Windows®, you can operate Address Book Editor with using the Tool Box on the Dell Printer Hub and Dell Print Management Tool. See "Tool Box."

1 Click **Finder** → **Applications** → **Dell** → **Dell Color Cloud Multifunction Printer - H625cdw/Dell Color Cloud Multifunction Printer - H825cdw/Dell Color Smart Multifunction Printer - S2825cdn**, and then double-click **Address Book Editor**.

2 Perform either of the following:

Click **New (Device Address Book)** → **New Server**.

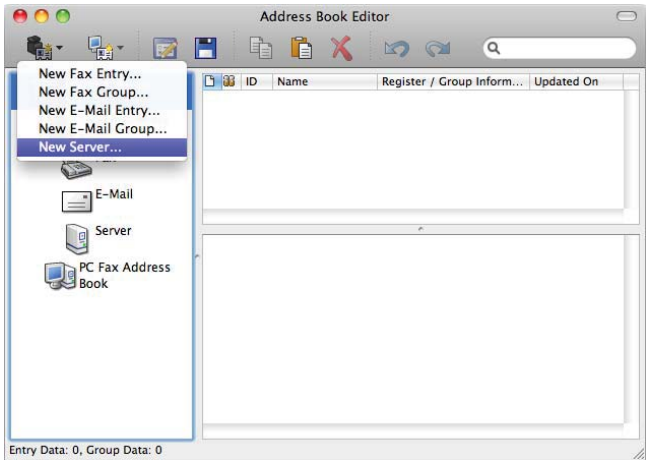

Server Address dialog box appears.

3 Enter the information as follows to fill in the fields.

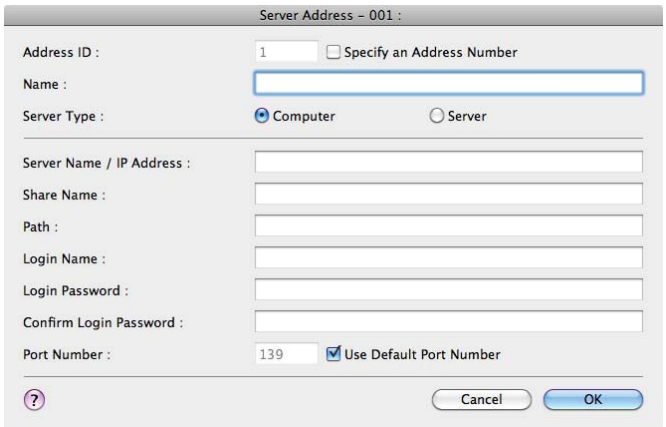

Name	Enter a name of your choice. This appears as the name for the Server Address in the Address Book.
Server Type	Select **Computer** to send documents to a shared folder on your computer using Server Message Block (SMB). Select **Server** to send documents to an FTP server.
Server Name/IP Address	Enter the name or IP address of the server or computer. Example: • For Computer (SMB): Computer name: *myhost* IP address: *192.0.2.1* • For Server (FTP): Server name: *myhost.example.com* (myhost: host name, example.com: domain name) IP address: *192.0.2.1*

Share Name	Enter the name of the shared folder. See "Creating a Shared Folder (SMB Only)." For SMB only. Example: *Share*, *Sharefolder*
Path	Enter the path of the sub-folder within the shared folder. If you have not created a sub-folder, leave this blank. When entering the sub-folder path, make sure that the sub-folder is already created and do not enter the name of the shared folder. Example: Shared Folder name: *MyShare*, Second-level folder name: *MyPic* Enter "***MyPic***". If you have created a sub-folder within a sub-folder, separate each sub-folder name with a backslash (SMB) or forward slash (FTP). Example: Shared Folder name: *MyShare*, Second-level folder name: *MyPic*, Third-level folder name: *John* • For SMB enter "***MyPic\John***". • For FTP enter "***MyPic\John***".
Login Name	Enter the user account name to allow access to a shared folder on your computer (SMB) or to an FTP server. • For Computer (SMB): Windows® login name that you have specified in the procedure 1. • For Server (FTP): Contact your system administrator.
Login Password	Enter the password corresponding to the login name. • For Computer (SMB): Empty password is not valid in the `Network(Computer)` feature. Make sure that you have a valid password for the user login account. See "Setting a User Account (SMB Only)." • For Server (FTP): Contact your system administrator.
Confirm Login Password	Re-enter your password.
Port Number	Enter the Server Port Number. If you are unsure, you can enter the default value of 139 for Computer (SMB) and 21 for FTP server. Available ports are: For Computer (SMB): 139, 445, 5000 - 65535 For Server (FTP): 21, 5000 - 65535

4 Click **OK**.

Sending the Scanned Data on the Network

1 Load the document(s).
See "Loading Documents."

2 Press the (**Home**) button.

3 Tap → `Scan to Network Folder`.

4 Tap the desired address → **`Done`**.
If the desired address is not displayed, swipe the screen.

5 Tap , and then check and change the scan settings.
See "Scan Settings."

6 Tap `Scan`.

When the document is loaded on the document glass, the screen prompts you to scan another page.

- If you want to scan another page, place the document, and then tap `Continue`.
- If you are finished scanning, tap `Done`.

Scanning to a USB Flash Drive

The Scan to USB feature allows you to store scanned data directly to a USB flash drive attached to the printer without using software.

See "Supported USB Flash Drive."

Procedures

To store the scanned data to a USB flash drive:

NOTE:

- If you insert a USB flash drive to the front USB port first, the `USB Drive Detected` screen may appear. In this case, select `Scan to USB`, and then proceed to step 6.

1. Load the document(s).

   See "Loading Documents."

2. Press the (**Home**) button.
3. Insert a USB flash drive into the front USB port of the printer.
4. Tap `Scan to USB`.
5. Select a folder to save the scanned data.

   See "Specifying a Folder to Save the Scanned Data."

6. Tap , and then check and change the scan settings.

   See "Scan Settings."

7. Tap `Scan`.

   CAUTION:

   - **Do not remove the USB flash drive while the printer is accessing the drive. The data in the drive may be destroyed, or the drive itself may be damaged and become unusable.**

   When the document is loaded on the document glass, the screen prompts you to scan another page.

   - If you want to scan another page, place the document, and then tap `Continue`.
   - If you are finished scanning, tap `Done`.

8. Remove the USB flash drive from the printer.

   CAUTION:

   - **Make sure that the printer is not accessing the USB flash drive.**

Specifying a Folder to Save the Scanned Data

To save the scanned data to a folder in the USB flash drive, specify the folder before executing the scan job.

1. If folders exist in the USB flash drive, the folder names appear on the touch panel.

2 Select a folder to save the scanned data.

NOTE:

- The default saving location is the root directory of the USB flash drive.
- You cannot directly enter a folder path using the numeric keypad.
- You can select any folder in the USB flash drive but cannot create a new folder in this step. You should always create a new folder before connecting the USB flash drive to the printer.

If the name of the scanned data already exists in the folder, the printer generates a new file name to save the data.

Sending a Scanned Data via E-Mail

You can send the data scanned as an e-mail attachment using the Scan to Email feature. To send an e-mail, an e-mail account is necessary such as the corporate mail account or the Internet service provider's mail account. Gmail account can be used as well.

The following are the procedures necessary to setup Scan to E-mail feature:

1 "Gathering the Necessary Information About Your E-mail Account"

2 "Setting the DNS Server Address"

3 "Setting the Information Necessary to Access the Mail Server"

Gathering the Necessary Information About Your E-mail Account

To send an e-mail from the printer, the following information is necessary:

- E-mail account (user account) information
- E-mail sever information

NOTE:

- For details about your e-mail account or the mail server, contact your network administrator or your Internet service provider.
- When the printer is connected to the network via a proxy server, the printer may not be able to send the e-mail. In this case, contact your network administrator.
- The following preparations are effective while the e-mail account information is valid. You do not have to repeat the settings whenever you send the e-mail.

Setting the DNS Server Address

To set the DNS server address to the printer, perform the following procedure:

1 Start the Dell Printer Configuration Web Tool.
See "Starting the Dell Printer Configuration Web Tool."

2 Click **Print Server Settings** → the **Print Server Settings** tab → **TCP/IP**.

3 Perform either of the following:

- If you are using DHCP for TCP/IP setting for the printer:
  Select the **Enable** check box for **Get DNS Server Address from DHCP** in **DNS**.
- If you are setting TCP/IP manually:
  Set **Manual DNS Server Address** in **DNS**.

4 Click **Apply New Settings**.

Setting the Information Necessary to Access the Mail Server

To make the printer to send an e-mail, perform the following procedure:

1 Start the Dell Printer Configuration Web Tool.

See "Starting the Dell Printer Configuration Web Tool."

2 Click **E-Mail Server Settings Overview**.

3 Set the mail server information as follows:

NOTE:

- In this procedure, the server settings for a Gmail account are used as an example. The server settings differ for each e-mail service.
- Information about the Gmail account is based on the information as of October 2013. For the latest information, visit the homepage of Gmail.

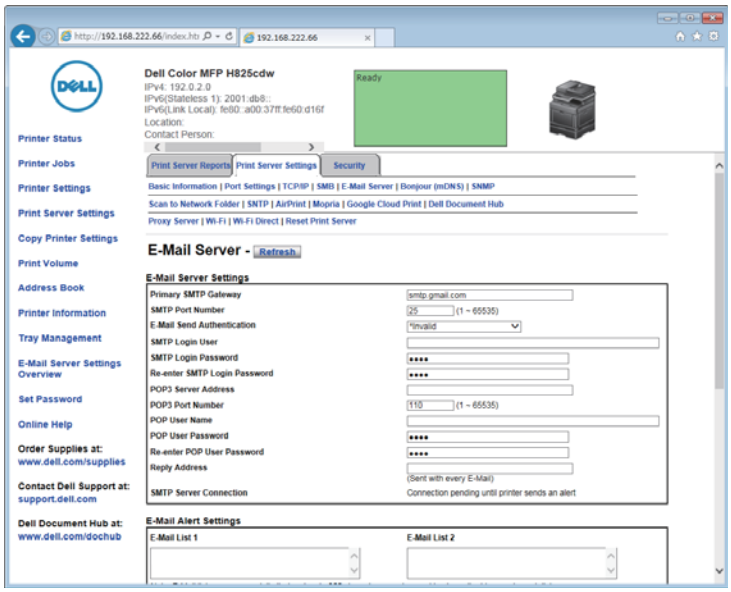

a In the **Primary SMTP Gateway** text box, set the primary SMTP gateway.

For example: *smtp.gmail.com*

b In the **SMTP Port Number** text box, enter the SMTP port number.

This must be 25, 587 or between 5000 and 65535.

For example: *587*

c In the **E-Mail Send Authentication** drop-down list box, specify the authentication method for outgoing e-mail.

For example: *SMTP_Auth (Auto)*

d In the **SMTP Login User** text box, set the SMTP login user.

Up to 63 alphanumeric characters, periods, hyphens, underscores, and at symbols (@) can be used. If specifying more than one address, separate them using commas.

For example: *aaaa@gmail.com*

NOTE:

- It is not recommended to share a personal e-mail account with the Scan to Email function of the printer. Instead, use an e-mail account dedicated to Scan to Email function.

e In the **SMTP Login Password** text box, set the SMTP account password.

Up to 31 alphanumeric characters can be used.

f In the **Re-enter SMTP Login Password** text box, enter the login password again to check it.

g Perform either of the following:

- If you have selected other than **POP before SMTP (Plain)** or **POP before SMTP (APOP)** in the **E-Mail Send Authentication** drop-down list box, proceed to step h.
- If you have selected **POP before SMTP (Plain)** or **POP before SMTP (APOP)** in the **E-Mail Send Authentication** drop-down list box, enter the following:
  - In the **POP3 Server Address** text box, enter the POP3 server address in IP address format of aaa.bbb.ccc.ddd or as a DNS host name using up to 63 characters.
  - In the **POP3 Port Number** text box, enter the POP3 server port number. This must be 110 or between 5000 and 65535.
  - In the **POP User Name** text box, set the POP3 account user name. Up to 63 alphanumeric characters, periods, hyphens, underscores, and at symbols (@) can be used. If specifying more than one address, separate them using commas.
  - In the **POP User Password** text box, enter the POP3 account password. Up to 31 alphanumeric characters.
  - In the **Re-enter POP User Password** text box, enter the POP user password again to check it.

h In the **Reply Address** text box, enter the reply e-mail address sent with each **E-Mail Alert**.

4 Click **Apply New Settings**.

- If SSL/TLS is not used or if **Invalid**, **POP before SMTP (Plain)**, or **POP before SMTP (APOP)** is selected for **E-Mail Send Authentication**, the mail server settings are complete.
- If SMTP authentication is selected for **E-Mail Send Authentication** and if SSL/TLS encryption is used to communicate with the SMTP sever, the SSL/TLS type must be set in **SMTP-SSL/TLS Communication** of **SSL/TLS** under the **Security** tab. Proceed to step 5.

NOTE:

- To send an e-mail through Gmail, set the SSL/TLS type to **STARTTLS** in **SMTP-SSL/TLS Communication** of **SSL/TLS** under the **Security** tab.

5 Click the **Security** tab → **SSL/TLS**.

6 Select a SSL/TLS type from the **SMTP-SSL/TLS Communication** list.

NOTE:

- To use a Gmail account, select **STARTTLS**.

7 Click **Apply New Settings**.

Registering a Destination E-Mail Address to Address Book

1 Start the Dell Printer Configuration Web Tool.

See "Starting the Dell Printer Configuration Web Tool."

2 Click **Address Book** → **E-Mail Address** tab → **Create** of an ID.

The **E-Mail Address** page for registering a new e-mail address appears.

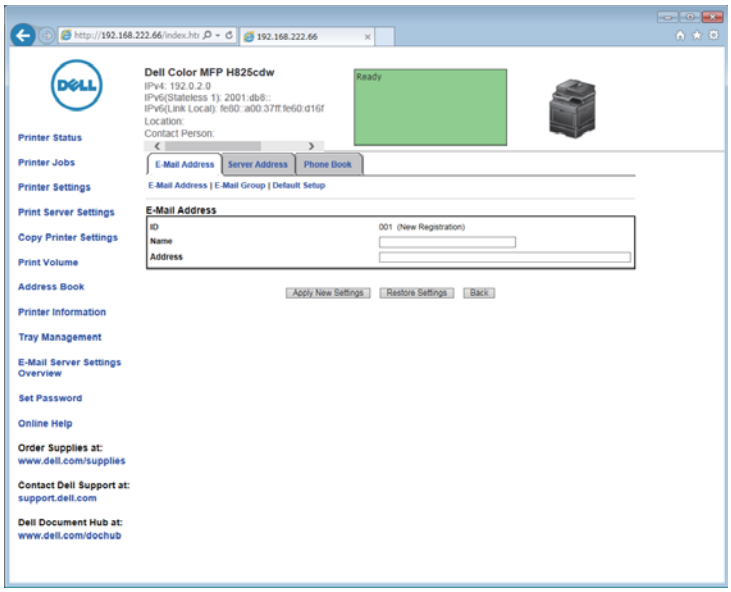

3 Enter the following:

- Name
- Address

4 Click **Apply New Settings**.

Sending an E-mail With the Scanned Data

1 Press the (**Home**) button.

2 Tap → `Scan to Email`.

3 Specify a recipient by either of the following:

- If you want to enter an e-mail address directly:
  - **a** Tap the `Enter Recipient's Address` text box.
  - **b** Enter the address using the keyboard.
  - **c** Tap `Done`.

  You can remove or edit the recipient by tapping + and the recipient you specified.
- If you want to select from the following types of address books:
  - **a** Tap `Address Book`.
  - **b** Select a recipient from either of the following:
    - – Tap `Individuals` to select an e-mail address registered in the address book.
    - – Tap `Groups` to select a group of e-mails registered in the address book.
    - – Tap `Network Address Book` to search an e-mail address from the LDAP server address book.

      See "Sending an E-mail With the Scanned Data Using the E-mail Server Address Book."
  - **c** Tap `Done`.

You can remove or see details of the recipient, or set the e-mail as Bcc by tapping + and the recipient you specified.

4 Tap `Sender`, and then specify the sender's e-mail address by either of the following:

- If you want to enter an e-mail address directly:
  - **a** Tap `Keyboard`.
  - **b** Enter the address using the keyboard.
  - **c** Tap `Done`.
- If you want to select from the address book:
  - **a** Tap `Address Book`.
  - **b** Select an e-mail address registered in the address book.
  - **c** Tap `Done`.
- If you want to select from the server address book:

  See "Sending an E-mail With the Scanned Data Using the E-mail Server Address Book."

NOTE:

- For details about address book and server address book, see "Using the Address Book and Phone Book."
- For details about `Network Address Book`, see "Using the Server Address Book and Server Phone Book."
- E-mail addresses need to be registered before you can select `Address Book`.

5 Tap ⚙, and then check and change the scan settings.

See "Scan Settings."

6 Tap `Send`.

When the document is loaded on the document glass, the screen prompts you to scan another page.

- If you want to scan another page, place the document, and then tap `Continue`.
- If you are finished scanning, tap `Done`.

Managing the Scanner

You can connect the specified scanner, and set the password for the scanner.

Port Settings

When the printer is connected to the computer directly by a USB cable, select **USB**.

When the printer is connected to the network, select **Network**. Enter the IP address of the printer in the **IP Address** text box, and then click **OK**.

When the Printer is Connected to the Network

When you are using DHCP for TCP/IP setting for the printer, the image capturing software may not find the scanner occasionally due to the change of the IP address allocated for the printer. In this case, check the IP address of the printer, and then connect the scanner by specifying the IP address.

On Windows®, you can check the IP address of the printer using the Dell Printer Hub or Dell Print Management Tool. Open Dell Printer Hub or Dell Print Management Tool, and then click **Printer information**.

Searching the Scanner

In the **Port Settings** tab, you can search the scanners from the network and select the desired one from the detected scanners.

Search all scanners from the network (Windows® only)	Select to search scanners in your network.
Scanner List	Displays a list of detected scanners.
Search again	Click to search the scanners in your network.
Search Criteria (Windows® only)	Click to display the **Search Criteria** dialog box for setting the search condition. See "Search Criteria Dialog Box (Windows® only)."

Search Criteria Dialog Box (Windows® only)

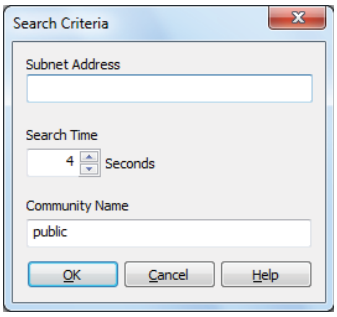

Subnet Address	Enter the subnet address. • IPv4: Broadcast Address such as *192.0.2.1* • IPv6: Multicast Address such as *2001:db8::*
Search Time	Specify a time period for searching a scanner.
Community Name	Enter the SNMPv1/v2 community name. The default community name is "public."

Password Settings

In the **Password Settings** tab, you can input the password that is set for your scanner to access from your computer to the printer.

For Windows®:

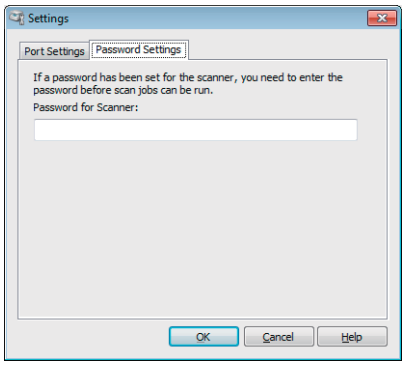

For OS X:

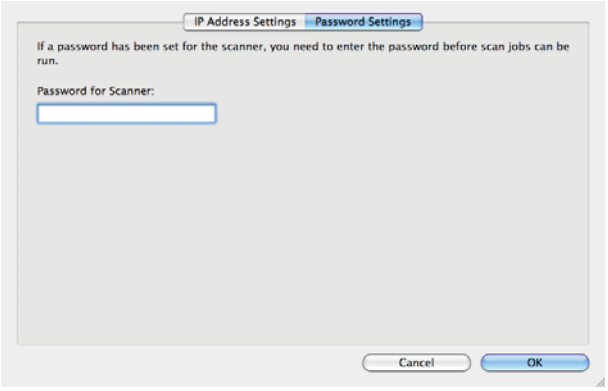

Password for Scanner	Enter the password.

Changing the Default Scan Setting

NOTE:

- You can set the same setting using the Dell Printer Configuration Web Tool. See "Dell™ Printer Configuration Web Tool."

1 Press the ⓘ (**Information**) button.

2 Tap the `Tools` tab → `Default Settings` → `Scan Defaults`.

3 Select the desired menu item.

If the desired menu item is not displayed, tap ▼ or ▲ to scroll through the screen.

4 Select the desired setting or enter the value, and then tap `OK`.

5 Repeat steps 3 and 4 as needed.

Faxing

NOTE:

- If the Functions Control setting is set to `On (Password)`, you need to enter the four-digit password to use the function. If the Functions Control setting is set to `Off`, the function is disabled and the menu is grayed out. See "Functions Control."

Initial Settings

To use the fax function, you need to perform the initial settings.

If you have already performed the initial settings for fax when you first turned on the printer, you can skip this procedure. See "Setting Initial Settings on the Operator Panel."

If you have not performed the initial settings for fax, you can perform initial settings using the Dell Printer Easy Install or Operator Panel.

Specifying the Fax Initial Settings Using the Dell Printer Easy Install

1 Insert the *Software and Documentation* disc into your computer.
The Dell Printer Easy Install program starts.

2 Click **Main Menu**.

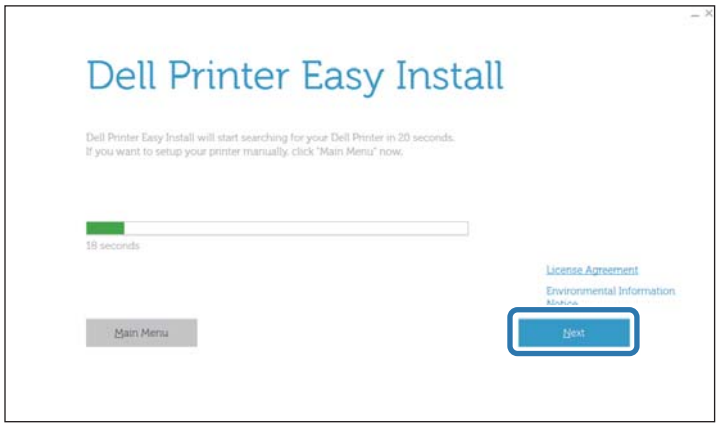

3 Click **Change**.
The **Configure Printer** screen appears.

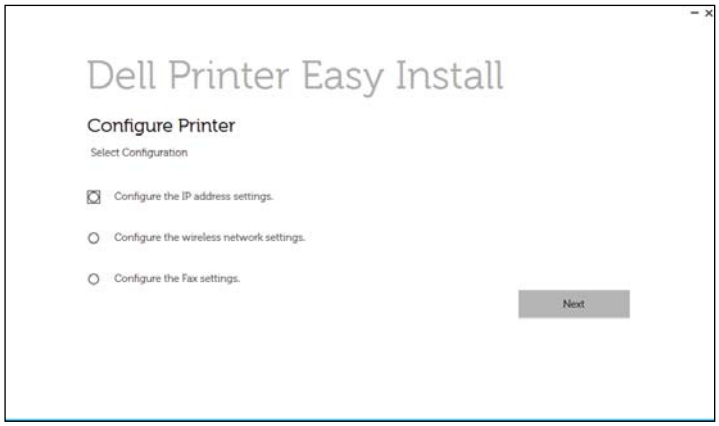

4 Click **Configure the Fax settings** → **Next**.

5 Follow the on-screen instruction.

Specifying the Fax Initial Settings Using the Operator Panel

To set the fax settings manually from the operator panel, set the following menus.

NOTE:

- You can set the same setting using the Dell Printer Configuration Web Tool. See "Dell™ Printer Configuration Web Tool."
- If `Panel Lock Control` is set to `Enable`, enter the password when entering `Admin Settings`. See "Panel Lock."

- `Fax Number`, `Country`, `Fax Header Name`, and `Line Type`:

  From the (**Information**) button → `Tools` tab → `Admin Settings` → `Fax Settings` → `Fax Line Settings`

  If you use DRPD option, you can set `DRPD Pattern` here.

  NOTE:

  - When you configure the country setting, the settings relevant to it is initialized.

- `Receive Mode`:

  From the (**Information**) button → `Tools` tab → `Admin Settings` → `Fax Settings` → `Incoming Defaults`

- `Tone / Pulse`:

  From the (**Information**) button → `Tools` tab → `Admin Settings` → `Fax Settings` → `Transmission Defaults`

For details about each menu, see "Fax Settings."

Changing the Fax Settings

1 Press the (**Information**) button.

2 Tap the `Tools` tab → `Admin Settings` → `Fax Settings`.

  If `Panel Lock Control` is set to `Enable`, enter the password. See "Panel Lock."

3 Select the desired menu.

4 Select the desired setting or specify a value.

  To specify a value, tap – or +, or use the number pad or the keyboard.

5 Tap `OK`.

6 Repeat steps 3 to 5 as needed.

For available options, see "Fax Settings."

Sending a Fax

You can fax data from the printer. You can also directly fax data transferred from a computer running a Microsoft® Windows® operating system or a Macintosh computer.

Sending a Fax From Memory

1 Load the document(s).

See "Loading Documents."

2 Press the (**Home**) button.

3 Tap → Fax.

4 Tap , and then check and change the fax settings.

See "Fax Settings."

To return to the previous screen, tap Back.

5 Enter or select a fax number by performing either of the following:

- If you want to enter a fax number directly:
  - **a** Tap the Enter Number text box.
  - **b** Enter the number using the keyboard.
  - **c** Tap Done.
- If you want to select from the phone book:
  - **a** Tap Phone Book.
    - – Tap Individuals to select an individual fax number.
    - – Tap Groups to select a group dial number.
    - – Tap Network Phone Book to search and select a fax number from the LDAP server.

      See "Sending a Fax Using the Fax Server Phone Book."
  - **b** Tap Done.

  NOTE:
  - For details about address book and server address book, see "Using the Address Book and Phone Book."
  - For details about Network Phone Book, see "Using the Server Address Book and Server Phone Book."
  - The fax number needs to be registered before you can select Address Book.
- If you want to select from the speed dial:
  - **a** Tap Speed Dial.
  - **b** Enter the speed dial number using the number pad.
  - **c** Tap Done.

You can add more fax numbers by tapping +.

6 Tap Send.

NOTE:
- To cancel the fax job, tap Stop at any time while sending the fax.

When the document is loaded on the document glass, the screen prompts you for another page.

- If you want to place a new document, replace the document with a new document, and then tap Continue.
- When you have finished loading documents, tap Done.

The printer starts dialing the number, and then sends the fax when the remote fax machine is ready.

Sending a Fax Manually

1 Load the document(s).

See "Loading Documents."

2 Press the (**Home**) button.

3 Tap → `Fax`.

4 Tap , and then check and change the fax settings.

See "Fax Settings."

5 Tap `On Hook`.

6 Enter the fax number of the recipient using the number pad.

You can also select the recipient by using speed dial number or address book. See "Automatic Dialing."

7 Tap `Send`.

NOTE:

- To cancel the fax job, tap `Stop` at any time while sending the fax.
- Tapping `Send` does not start sending a fax when the available time is set or the Fax function is locked. For details about the available time and the Fax function, see "Set Available Time" and "Functions Control."

When the document is loaded on the document glass, the screen prompts you for another page.

- If you want to place a new document, replace the document with a new document, and then tap `Continue`.
- When you have finished loading documents, tap `Done`.

Confirming Transmissions

When the last page of your document has been sent successfully, the printer beeps and returns to the standby mode.

If something goes wrong while sending your fax, an error message appears on the touch panel.

If you receive an error message, tap `Close` to clear the message and send the document again.

You can set the printer to print a confirmation report after each fax transmission. See "Fax Transmit."

Automatic Redialing

If the number you have dialed is busy or there is no answer when you send a fax, the printer redials the number every minute based on the number set in the redial settings.

For details about how to change the time interval between redials and the number of redial attempts, see "Fax Settings."

NOTE:

- The printer does not redial a number when you send a fax manually.

Sending a Delayed Fax

The Delayed Start mode can be used to save scanned data for transmission at a specified time to take advantage of lower long distance rates.

Once Delayed Start mode is activated, the printer stores all of the documents to be faxed into its memory and sends them at the specified time.

After faxing in the Delayed Start mode is complete, the data in the memory is cleared.

1. Load the document(s).
   See "Loading Documents."
2. Press the (**Home**) button.
3. Tap → `Fax`.
4. Tap , and then check and change the fax settings.
   See "Fax Settings."
5. In the `Fax Settings` screen, tap `Delayed Send`.
6. Select the `On` check box.
7. Specify the start time by tapping – or +, and then tap `OK`.
8. Tap `Back`.
9. Enter the fax number of the recipient using the number pad.
   You can also select the recipient using speed dial number or address book. See "Automatic Redialing."
10. Tap `Send`.
    When the document is loaded on the document glass, the screen prompts you for another page.
    - If you want to place a new document, replace the document with a new document, and then tap `Continue`.
    - When you have finished loading documents, tap `Done`.

    Scanning starts and the data is stored in the memory to be sent at the specified time.

    NOTE:
    - If you restart the printer, the stored documents are sent as soon as the printer is activated.
    - If the specified start time overlaps with the time periods for the available time or the Fax function, the printer cannot send the delayed fax at the specified time. For details about the available time and the Fax function, see "Set Available Time" and "Functions Control."

Sending a Fax Directly From a Computer

You can send a fax directly from your computer using the driver.

NOTE:
- Only black and white faxes can be sent using Direct Fax.
- If the specified start time overlaps with the time periods for the available time or the Fax function, the printer cannot send the delayed fax at the specified time. For details about the available time and the Fax function, see "Set Available Time" and "Functions Control."

Overview

The following images use Dell H825cdw as examples.

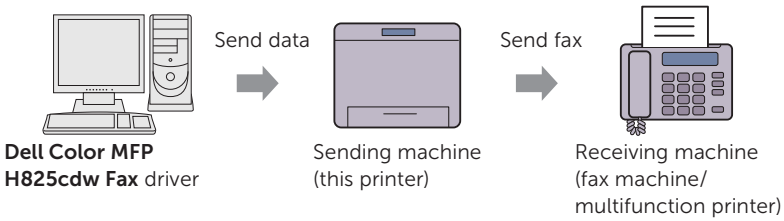

Procedure

NOTE:

- The names of the dialog boxes and the buttons may be different from those given in the following procedure depending on the program you are using.
- To use this feature, you must install the fax driver. For Windows®, see "Installing the Software for Windows® Computers." For OS X, see "Installing the Software and Print Drivers."

The following procedure uses Dell H825cdw as an example.

1 Open the file you want to fax.

2 Open the print dialog box from the program.

3 Click **Dell Color MFP H825cdw Fax** → **Preferences** for Windows® or **FAX Setting** for OS X.

For Windows®:

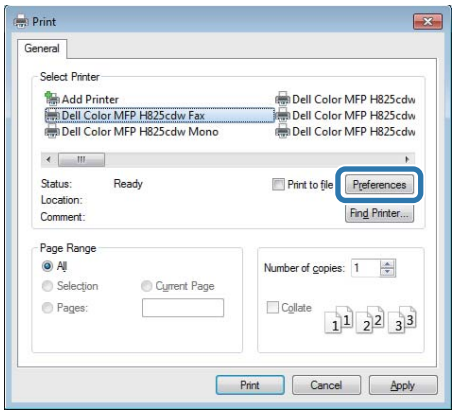

For OS X:

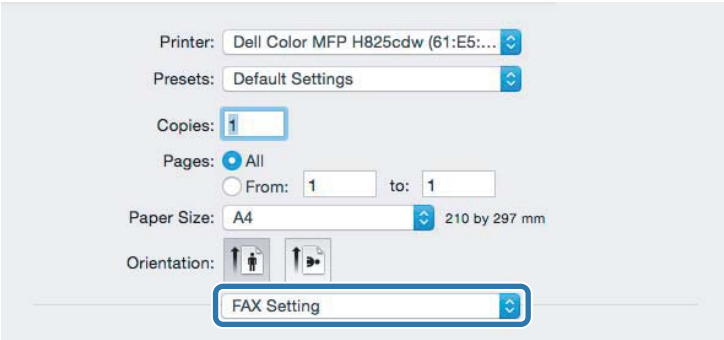

4 Specify the following settings.

NOTE:

- The settings made here are only applied to a single fax job.

For Windows®:

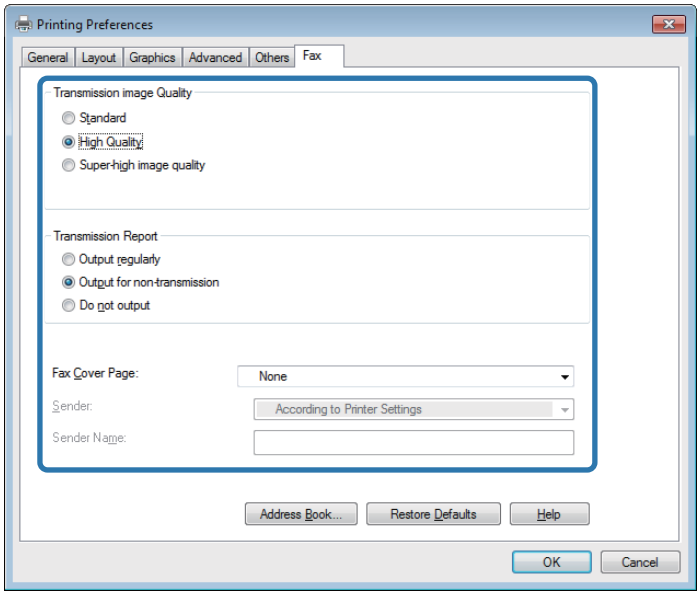

For OS X:

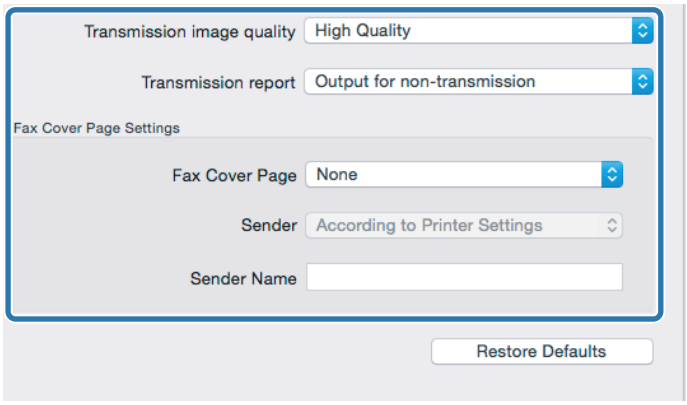

Transmission image quality	Select the output quality. • **Standard**: For documents with normal sized characters. • **High Quality**: For documents containing small characters or thin lines or documents printed using a dot-matrix printer. • **Super-high image quality**: For documents containing extremely fine detail. The super fine mode is enabled only if the remote machine also supports Super Fine resolution. **NOTE:** • Faxes printed in the Super-high image quality by Direct Fax driver transmits at the highest resolution supported by the receiving device.

Transmission report	Specify whether to print a fax transmission result. • **Output regularly**: Prints a transmission result after every fax transmission. • **Output for non-transmission**: Prints a transmission result only when an error occurs. • **Do not output**: Does not print fax transmission results.
Fax Cover Page	Specify whether to attach a cover page to your fax. • **According to Printer Settings**: Determines whether to attach a cover page to your fax in accordance with the setting you specify in `Fax Cover Page` on the operator panel. • **Attach**: Attaches a cover page to your fax. • **None**: Does not attach a cover page to your fax.
Sender	Specify whether to print the sender's name on the fax cover page. • **According to Printer Settings**: Determines whether or not to print the sender's name on the fax cover page based on the printer settings. • **Enter a sender name**: Allows you to enter a sender's name to be printed on the fax cover page in **Sender Name**.
Sender Name	Enter a sender's name to be printed on the fax cover page. The sender's name can be up to 30 characters. If it exceeds 30 characters, only the first 30 characters are printed.

5 Perform either of the following:

- For Windows®: Click **OK** to close the **Printing Preferences** dialog box, and then click **Print**.
- For OS X: Click **Print**.

The **Recipient Setting** dialog box for Windows® or the **Set/Check Fax Transmission** dialog box for OS X appears.

6 Enter the destination for the recipient by performing the following.

For details about how to enter the destination, refer to the Help of the driver.

For Windows®:

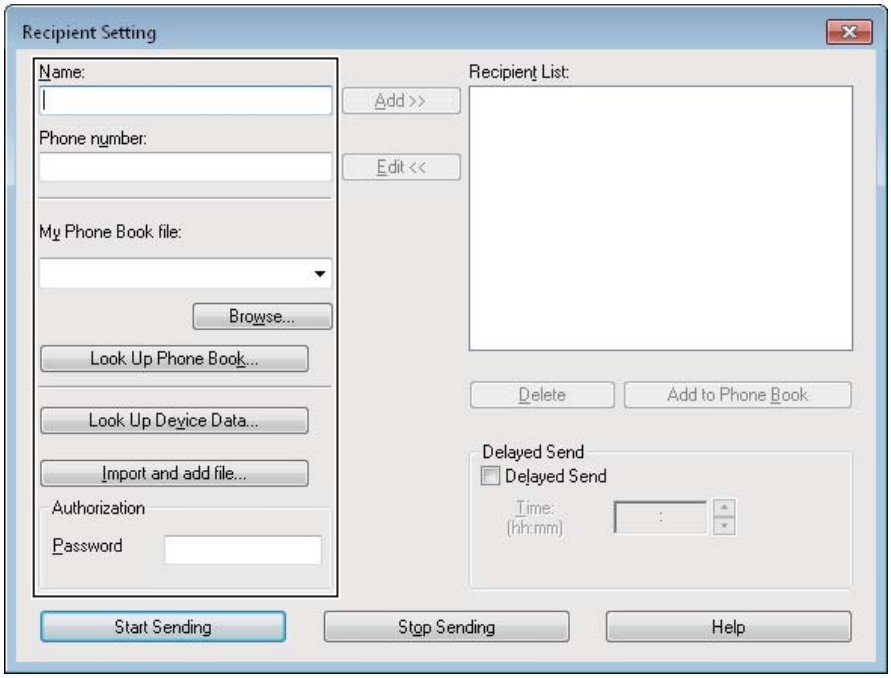

For OS X:

- Enter the name and fax number directly.
- Select a fax number from a phone book:

Look Up Phone Book	Select from a list of fax numbers saved in the file specified for **My Phone Book file**.
Look Up Device Data	Select from a list of fax numbers saved in the Phone Book on the printer.
Import and add file (Windows® only)	Select a source file such as a CSV file, WAB file, MAPI, or a LDAP server. See "LDAP Server" and "Fax Server Phone Book."

NOTE:

- When you are using Mac OS X 10.7 or later, you cannot use **Look Up Device Data** feature on some programs.
- Enter the password in the **Password** text box in the **Authorization** area before sending a fax if the fax function is locked with a password.
- If the Functions Control setting is set to `On (Password)`, you need to enter the four-digit password to use the function.

7 Click **Start Sending**.

Automatic Dialing

Speed Dialing

You can store up to 200 frequently dialed numbers in speed dial locations (001–200).

When the speed dial job specified in the delayed fax or redial exists, you cannot change the speed dial number from the operator panel or Dell Printer Configuration Web Tool.

Setting Speed Dial

1 Press the (**Information**) button.

2 Tap the `Tools` tab → `Admin Settings` → `Phone Book` → `Individuals`.

If `Panel Lock Control` is set to `Enable`, enter the password. See "Panel Lock."

3 Select the desired speed dial number.

If the desired speed dial number is not displayed, tap ▼ or ▲ to scroll through the screen.

To jump to a specific speed dial number, enter the desired number and then # using the number pad.

If a speed dial number is already set, the screen shows the name and the number of entries.

4 Tap the `Enter Name` text box.

5 Enter the name, and then tap `OK`.

6 Tap the `Enter Number` text box.

7 Enter the fax number using the number pad, and then tap `OK`.

To insert a pause between numbers, press the (**Redial/Pause**) button.

"-" appears on the touch panel.

8 Tap `OK`.

9 Repeat steps 3 to 8 as needed.

Editing Speed Dial

You can edit or delete a speed dial number.

1 Press the (**Information**) button.

2 Tap the `Tools` tab → `Admin Settings` → `Phone Book` → `Individuals`.

If `Panel Lock Control` is set to `Enable`, enter the password. See "Panel Lock."

3 Select the desired speed dial number.

If the desired speed dial number is not displayed, tap ▼ or ▲ to scroll through the screen.

4 Perform the following:

- To edit a speed dial number:

a Tap Edit → the Name or Fax Number text box.

b Enter a new name or a fax number, and then tap OK.

- To delete a speed dial number:

  Tap Remove → Delete.

5 Repeat steps 3 to 4 as needed.

Sending a Fax Using Speed Dial

1 Load the document(s).

See "Loading Documents."

2 Press the (**Home**) button.

3 Tap → Fax → Speed Dial.

4 Enter the speed dial number using the number pad, and then tap Done.

NOTE:

- Using the asterisk (*) in the first digit, you can send a document to multiple locations. For example, if you enter 00*, you can send a document to the locations registered between 001 and 009.

5 Tap , and then check and change the fax settings.

See "Fax Settings."

6 Tap Send.

When the document is loaded on the document glass, the screen prompts you for another page.

- If you want to scan another document, replace the document with a new document, and then tap Continue.
- When you have finished loading documents, tap Done.

The fax number stored in the speed dial location is dialed. The document is sent when the remote fax machine answers.

Group Dialing

If you frequently send a document to several destinations, you can create a group of these destinations and set them under a one-digit group dial location. This enables you to use a group dial number setting to send the same document to all the destinations in the group.

NOTE:

- You cannot include one group dial number within another group dial number.

Setting Group Dial

1 Press the (**Information**) button.

2 Tap the Tools tab → Admin Settings → Phone Book → Groups.

If Panel Lock Control is set to Enable, enter the password. See "Panel Lock."

3 Select the desired group dial number.

If the desired group dial number is not displayed, tap ▼ or ▲ to scroll through the screen.

If a group dial number is already set, the screen shows the name and the number of entries stored in that group dial number.

4 Tap the `Enter Group Name` text box.

5 Enter the name, and then tap `OK`.

6 Tap `Add from Address Book`.

NOTE:

- The fax number needs to be registered before you can select `Add from Address Book`.

7 Select the desired speed dial number.

If the desired speed dial number is not displayed, tap ▼ or ▲ to scroll through the screen.

8 Tap `OK`.

9 Repeat steps 3 to 8 as needed.

Editing Group Dial

You can delete a specific speed dial number from a selected group or add a new number to the selected group.

1 Press the ⓘ (**Information**) button.

2 Tap the `Tools` tab → `Admin Settings` → `Phone Book` → `Groups`.

If `Panel Lock Control` is set to `Enable`, enter the password. See "Panel Lock."

3 Select the desired group dial number.

If the desired group dial number is not displayed, tap ▼ or ▲ to scroll through the screen.

4 Perform the following:

- To edit a speed dial number:
  - **a** Tap `Edit` → `Enter Group Name` text box.
  - **b** Enter a new name, and then tap `OK`.
- To delete a speed dial number from the group dial number:

  Tap `Remove`.

5 Repeat steps 3 to 4 as needed.

Sending a Fax Using Group Dial (Multi-address Transmission)

You can use group dialing for Broadcasting or Delayed transmissions.

Follow the procedure of the desired operation. See "Delayed Send."

You can use one or more group numbers in one operation. Then continue the procedure to complete the desired operation.

The printer scans the document loaded in the Duplex Automatic Document Feeder (DADF) or on the document glass into the memory. The printer dials each of the numbers included in the group.

Printing a Speed Dial List

You can check your automatic dial setting by printing a Speed Dial list.

See "Report / List."

Phone Book

You can select or search the registered phone numbers from the phone books.

1 Load the document(s).
   See "Loading Documents."

2 Press the (**Home**) button.

3 Tap → `Fax` → `Phone Book`.

4 Specify the recipient by performing either of the following:
   - If you want to select from the local phone book:
     a Tap `Individuals` or `Groups`.
     b Select the desired speed dial number or the group dial number.
     If the desired number is not displayed, swipe the screen.
     c Tap `Done`.
   - If you want to search from the server phone book:
     a Tap `Network Phone Book`.
     b Enter a keyword using the keyboard, and then tap `Search`.
     c Tap a recipient from the search result → `Done`.

   NOTE:
   - For details about address book and server address book, see "Using the Address Book and Phone Book."
   - For details about `Network Phone Book`, see "Using the Server Address Book and Server Phone Book."
   - A fax number needs to be registered before you can select an address book.

5 Tap `Send`.
   When the document is loaded on the document glass, the screen prompts you for another page.
   - If you want to place a new document, replace the document with a new document, and then tap `Continue`.
   - When you have finished loading documents, tap `Done`.

Receiving a Fax

NOTE:
- To use the `Telephone / Fax` or `Ans Machine/Fax` mode, connect an answering machine to the phone connector on the rear of the printer. See "Connecting a Telephone or Answering Machine."

When the memory is full, the fax is received in the `Telephone` mode.

Loading Paper for Receiving Faxes

The instructions for loading paper in the paper tray are the same whether you are printing, faxing, or copying, except that faxes can only be printed on Letter-sized, A4-sized, or Legal-sized paper. See "Loading Print Media" and "Print Media Guidelines."

Receiving a Fax Automatically

To automatically receive a fax, use the `Fax`, `Telephone / Fax`, or `Ans Machine/Fax` mode. The default setting is `Fax` mode. See "Receive Mode."

NOTE:

- To use the `Telephone / Fax` or `Ans Machine/Fax` mode, you must connect an external telephone to the phone connector on the rear of the printer. See "Connecting a Telephone or Answering Machine."

Receiving a Fax Manually

When in the `Telephone` or `Telephone / Fax` mode, you can receive the fax manually. See "Receive Mode."

Using Remote Receive

Use Remote Receive to manually receive a fax from an external telephone without having to go to the printer.

To manually receive a fax using the external telephone, you must connect an external telephone to the phone connector on the rear of the printer and also set `Remote Receive` to `On`. See "Connecting a Telephone or Answering Machine."

When you receive a call on the external telephone and hear a fax tone, enter the remote receive code from the external telephone.

NOTE:

- When entering the remote receive code from the external telephone, press the number keys slowly in sequence. If you still hear the fax tone from the remote machine, try entering the two-digit code again.
- The default remote receive code is `00`. You can change the two-digit code to a number of your choice. See "Receive Mode."
- Set the dialing system of your external telephone to DTMF.

Using Manual Receive in On Hook

You can manually receive a fax by tapping `Manual Receive` in `On Hook` on the touch panel.

1. When the external telephone rings, pick up the handset.
2. Make sure that you hear the fax tone, and then press the (**Home**) button.
3. Tap → `Fax` → `On Hook` → `Receive` → `Receive`.
4. Hang up the hand set of the external telephone.

The printer begins receiving a fax and returns to the standby mode when the reception is completed.

Receiving Faxes Using the Distinctive Ring Pattern Detection (DRPD)

The `DRPD` is a telephone company service which enables a user to use a single telephone line to answer several different telephone numbers. The particular number someone uses to call you on is identified by different ringing patterns, which consist of various combinations of long and short ringing sounds.

Before using the Distinctive Ring Pattern Detection option, Distinctive Ring service must be installed on your telephone line by the telephone company. To set up Distinctive Ring Pattern Detection, you need another telephone line at your location, or someone available to dial your fax number from outside.

To set up the DRPD:

NOTE:

- You can set the same setting using the Tool Box or Dell Printer Configuration Web Tool. See "Tool Box" or "Dell™ Printer Configuration Web Tool."

1 Press the (**Information**) button.

2 Tap the `Tools` tab → `Admin Settings` → `Fax Settings` → `Fax Line Settings`.

If `Panel Lock Control` is set to `Enable`, enter the password. See "Panel Lock."

3 Tap ▼ until `DRPD Pattern` appears, and then tap `DRPD Pattern`.

4 Select the desired pattern, and then tap `OK`.

NOTE:

- The printer provides seven DRPD patterns. If this service is available from your telephone company, ask your telephone company which pattern you need to select to use this service.

5 Turn off the printer, and then turn it on again to apply the settings.

To receive faxes in the DRPD, you need to set the menu to DRPD. See "Receive Mode."

Receiving Faxes in the Secure Receiving Mode

You may need to prevent your received faxes from being accessed by unauthorized people. To restrict printing out all of the received faxes when the printer is unattended, turn on the secure fax mode using the `Secure Receive` option. In the secure fax mode, all incoming faxes is stored in memory. When the mode is turned off, all stored faxes are printed.

NOTE:

- To turn on the secure fax mode, `Panel Lock Control` must be set to `Enable`.

To turn the secure receiving mode on:

NOTE:

- You can set the same setting using the Dell Printer Configuration Web Tool. See "Dell™ Printer Configuration Web Tool."

1 Press the (**Information**) button.

2 Tap the `Tools` tab → `Admin Settings` → `Fax Settings` → `Incoming Defaults`.

If `Panel Lock Control` is set to `Enable`, enter the password. See "Panel Lock."

3 Tap ▼ until `Secure Receive` appears, and then tap `Secure Receive`.

4 Tap `Secure Receive Set` → `Enable`.

5 Enter a four-digit password, and then tap `OK`.

When a fax is received in the secure receiving mode, the printer stores it into memory and `Secure Fax Receive` is enabled on the `Print` screen to let you know that there is a fax stored.

To print received documents:

1 Press the (**Home**) button.

2 Tap → Print.

3 Swipe the screen until Secure Fax Receive appears, and then tap Secure Fax Receive.

4 Enter a four-digit password, and then tap OK.

The faxes stored in memory are printed.

To turn the secure receiving mode off:

1 Follow the same steps 1 to 3 in "To turn the secure receiving mode on:."

2 Tap Secure Receive Set → Disable.

Receiving Faxes in the Memory

Since the printer is a multi-tasking device, it can receive faxes while you are making copies or printing. If you receive a fax while you are copying, printing, or run out of paper or toner, the printer stores incoming faxes in the memory. And then, as soon as you finish copying, printing, or re-supply the consumables, the printer starts printing the fax.

Polling Receive

You can receive faxes from the remote fax machine when you want to receive it.

1 Press the (**Home**) button.

2 Tap → Fax → On Hook → Polling.

3 Enter the fax number of the remote machine using the number pad.

4 Tap Receive.

Reports Related to Fax

The following reports may be useful when using fax:

NOTE:

- For details about other reports and how to print a report, see "Report / List."

Speed Dial	This list shows all the numbers currently stored in the memory of the printer as speed dial numbers.
Address Book	This list shows all the addresses currently stored in the printer's memory as Address Book information.
Server Address	This list shows all of the numbers currently stored in the printer's memory as Server Address information.
Fax Activity	This report shows information about the faxes you recently received or sent.
Fax Pending	This list shows the status of pending faxes. You may print this list to check your changes after changing any settings.
Print Meter	This report shows the total number of pages printed. The report is titled as **Print Volume Report** or **ColorTrack Report**, depending on the ColorTrack Mode setting.

Changing the Default Fax Setting

NOTE:

- You can set the same setting using the Tool Box or Dell Printer Configuration Web Tool. See "Tool Box" or "Dell™ Printer Configuration Web Tool."

1 Press the (**Information**) button.

2 Tap the `Tools` tab → `Default Settings` → `Fax Defaults`.

3 Select the desired menu item.

If the desired menu item is not displayed, tap ▼ or ▲ to scroll through the screen.

4 Select the desired setting or enter the value, and then tap `OK`.

5 Repeat steps 3 and 4 as needed.

Dell™ Document Hub (Windows® Only)

The Dell Document Hub is a convenient one-stop gateway to a variety of cloud services to help you manage your documents. With the Dell Document Hub, you can convert hard copy documents into editable digital content and store them directly in your preferred cloud storage service. You can search for files across multiple clouds simultaneously and then share and print content easily.

NOTE:

- Dell Document Hub is available on Dell H625cdw and Dell H825cdw.

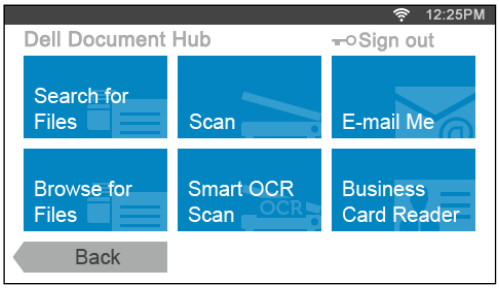

Registering the User and Signing In to the Dell Document Hub

To use the Dell Document Hub, you need a user account registered to the printer, and sign in to the Dell Document Hub.

Registering a New User to the Dell Document Hub

Prepare the access information required for each of the cloud services you want to use, and then make sure that you have a user account registered to the printer. See "Creating a New User Account."

To Register a New User From a Computer

1. Access the Dell Document Hub website from your computer by entering the following URL in the web browser:

   www.dell.com/dochub

2. Follow the on-screen instruction.

   An e-mail is sent to the registered e-mail address.

3. Check the e-mail and follow the instructions on the e-mail to activate.

To Register a New User From the Printer

You can start the user registration alternatively using the printer.

NOTE:

- To complete the registration process, you need a computer or mobile device to receive an e-mail and access the Dell Document Hub website.

1. Log in to the printer as a registered user.
2. In the `Home` screen, tap `Dell Document Hub` → `New User` → `Next`.

3 Follow the on-screen instruction.

Signing In to the Dell Document Hub

1 Log in to the printer as a registered user.

2 In the `Home` screen, tap `Dell Document Hub`.

The `Dell Doc Hub Sign In` screen is displayed.

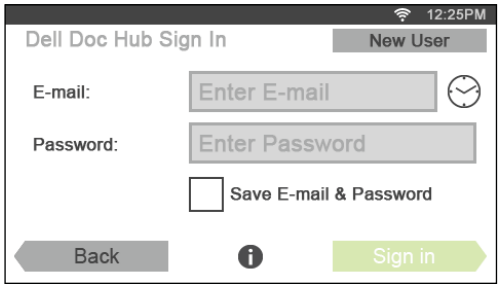

3 Tap the `E-mail` text box, and then enter the e-mail address.

NOTE:

- You can also tap to select a recently entered e-mail address from a list. The list can contain up to eight recently entered e-mail addresses.

4 Tap the `Password` text box, enter the password, and then tap `Done`.

If you want to save your e-mail address and password, select the `Save E-mail & Password` check box.

NOTE:

- The e-mail address and password are stored in the printer under your user account of the printer. For security purpose, it is recommended that you protect your user account of the printer with a password. If your user account is not protected with a password, unauthorized users may login to your user account of the printer, and then access your documents in the cloud services through the Dell Document Hub.

5 Tap `Sign in`.

NOTE:

- If all the tiles on the `Dell Document Hub` screen are pale and disabled when you sign in, you have not completed the necessary procedures to activate your account of the Dell Document Hub. Check the e-mail you received from the Dell Document Hub, and then activate your account.

Icons for the Dell Document Hub Screens

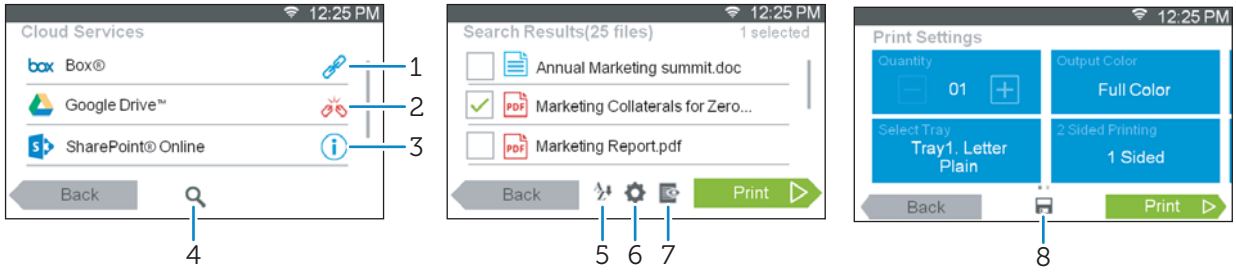

1		Indicates that the cloud service is correctly associated with the Dell Document Hub. Tap to display more information.
2		Indicates that the cloud service is not associated, or not linked correctly. Visit **www.dell.com/dochub** to link it again. Tap to display more information.
3		Indicates that the cloud service link with the Dell Document Hub has expired. Visit **www.dell.com/dochub** to link it again. Tap to display more information.
4		Tap to search for files in the current folder and subfolders (if any) from the selected cloud service. This is displayed when you select `Scan` or `Smart OCR Scan`.
5		Tap to sort the results in ascending, descending, or by cloud services order.
6		Tap to change print, scan or e-mail settings.
7		Tap to preview the selected files, up to the first three pages of each file.
8		Tap to save print, scan, e-mail settings or folder as Favorite.

When the Favorite List Screen Is Displayed When You Tap the Tile on the Dell Document Hub Screen

This means that your favorite settings for functions have been saved on the printer. Select the desired setting from the list, or tap `Skip` to continue the procedure.

Returning to the Home Screen

Tap `Back` or press the (**Home**) button.

NOTE:

- When you return to the `Home` screen by tapping `Back` or by pressing the (**Home**) button, sign-in status is maintained.
  Next time you tap `Dell Document Hub` on the `Home` screen, you do not have to sign in while you are logged in to the `Home` screen.
- You can tap `Sign out` as well to return to the `Home` screen, but the sign-in status is not maintained. Next time you sign in to the Dell Document Hub, you need to re-enter your e-mail address and password.

Logging Out From the Printer

Press the (**Log In/Out**) button to log out from the `Home` screen and to display the portal screen.

NOTE:

- When you log out using the (**Log In/Out**) button, the sign-in status to the Dell Document Hub is maintained as far as the `Save E-mail & Password` check box is selected in the step 5 in "Signing In to the Dell Document Hub." Next time you tap `Dell Document Hub` on the `Home` screen, you can skip the sign in process.

Searching for and Printing Files

You can search for the files saved in the cloud services, and print them from the printer. You can search across multiple cloud services at once. This method is suitable when you

want to search by the keywords, including the file name.

NOTE:

- To search for files across multiple cloud services, visit **www.dell.com/dochub** and connect the cloud services with the Dell Document Hub.
- This feature is enabled only when your printer still has the black toner, and the waste toner box is not full.

1 In the `Dell Document Hub` screen, tap `Search for Files`.

2 Enter the keywords, and then tap `Search`.

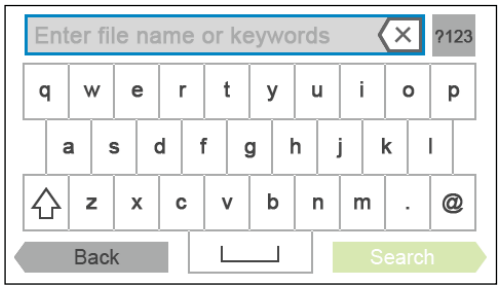

Files are searched across multiple cloud services you registered.

3 Tap the files you want to print.

NOTE:

- If the desired file is not displayed, swipe the screen.
- You can select up to 10 files.
- You can sort the results by tapping A/Z and selecting the sorting order.

4 Tap , and then preview the selected files.

The first three pages of each file are displayed in the small previews of the `File Preview` screen.

- To show the page in the large preview, tap the page in the small previews.
- To preview other files, flick the screen side to side.
- To specify the file as the one to be printed, select the check box at the upper-left corner beside the small previews.
- To return to the previous screen, tap `Back`.

5 Tap , and then check and change the print settings.

See "Print Settings."

6 Tap `Print`.

NOTE:

- To cancel printing, tap `Stop`.
- You can start printing by tapping `Print` in any screens of `Search Results`, `File Preview` or `Print Settings`.

Browsing and Printing Files

You can browse and print the files saved in the selected cloud services. This method is suitable when you know which cloud service the file you want to print is located in.

1 In the `Dell Document Hub` screen, tap `Browse for Files`.

The `Cloud Services` screen is displayed.

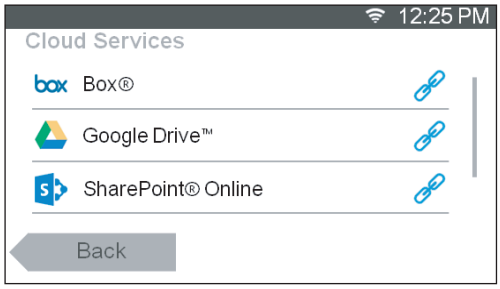

To link the cloud service with the Dell Document Hub, visit **www.dell.com/dochub**.

2 Tap the cloud service you want to browse in.

NOTE:

- If the desired cloud service is not displayed, swipe the screen.

3 Select the file you want to print by performing either of the following:

- Tap the location you want to browse in and the file you want to print.

  NOTE:

  - If the desired location is not displayed, swipe the screen.

- Search the files in the selected cloud service.

  a Tap .

  b Enter the file name or keywords, and then tap `Search`.

  NOTE:

  - You can sort the results by tapping and selecting the sorting order.

  c Tap `Back` to return to the previous screen.

NOTE:

- You can select up to 10 files.

4 Tap , and then preview the selected files.

NOTE:

- On the `File Preview` screen, the first three pages of each file are displayed.
- To show the page in the large preview, tap the page in the small previews.
- To preview other files, flick the screen side to side.
- To specify the file as the one to be printed, select the check box at the upper-left corner beside the small previews.
- To return to the previous screen, tap `Back`.

5 Tap , and then check and change the print settings.

See "Print Settings."

NOTE:

- You can save your print settings and file path to the cloud service as a favorite.
  1 Tap in the `Print Settings` screen.
  2 Name your favorite in the `Save Favorite` screen, and then tap Save.
- If you choose a name for a favorite that is the same as an existing favorite, the settings and the file path will be overwritten.
- You can delete an unnecessary favorite by tapping .
- Once you save your settings as a favorite, you can recall those settings the next time you sign in to the Dell Document Hub from any printer of the same model.

6 Tap `Print`.

NOTE:

- To cancel printing, tap `Stop`.
- You can start printing by tapping `Print` in any screens of contents list, `Search Results`, `File Preview`, or `Print Settings`.

Scanning

You can scan the document and save the scanned data in the cloud service.

1 In the `Dell Document Hub` screen, tap `Scan`.

The `Cloud Services` screen is displayed.

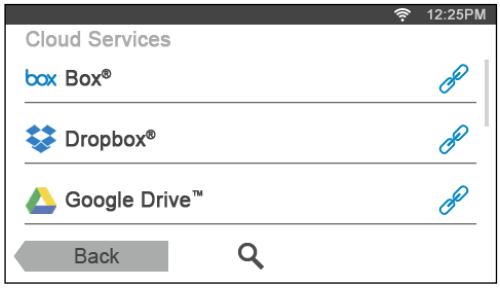

2 Select the destination you want to save the scanned data to by performing either of the following:

- Tap a cloud service you want to save the scanned data to, and then perform either of the following:
  - Tap the location you want to save the scanned data to.

    NOTE:

    - If the location is not displayed, swipe the screen.
  - Search the files in the selected cloud service.

    a Tap .

    b Enter the file name or keywords, and then tap `Search`.

    NOTE:

    - You can sort the results by tapping and selecting the sorting order.

    c Tap `Back` to return to the previous screen.
- Search the files across multiple cloud services.

  a Tap .

  b Enter the file name or keywords, and then tap `Search`.

  NOTE:

  - You can sort the results by tapping and selecting the sorting order.

  c Tap `Back` to return to the previous screen.

3 Tap `Next`.

4 Tap the `File Name` text box, and then enter the file name.

5 Tap the `File Format` box, and then select a file format.

6 Tap , and then check and change the scan settings.

See "Scan Settings."

NOTE:

- You can save your print settings and file path to the cloud service as a favorite.
  1 Tap ⚙ in the `Scan Settings` screen.
  2 Name your favorite in the `Save Favorite` screen, and then tap `Save`.
- If you choose a name for a favorite that is the same as an existing favorite, the settings and the file path will be overwritten.
- You can delete an unnecessary favorite by tapping 🗑 .
- Once you save your settings as a favorite, you can recall those settings the next time you sign in to the Dell Document Hub from any printer of the same model.

7 Tap `Scan`.

NOTE:

- To cancel scanning, tap `Stop`.

When the document is loaded on the document glass, the screen prompts you for another page.

- If you want to scan another document, replace the document with a new document, and then tap `Continue`.
- When you have finished loading documents, tap `Done`.

Scanning the Document Using Optical Character Recognition (OCR)

You can scan the document using OCR, and save it in the cloud service.

1 In the `Dell Document Hub` screen, tap `Smart OCR Scan`.
The `Cloud Services` screen is displayed.

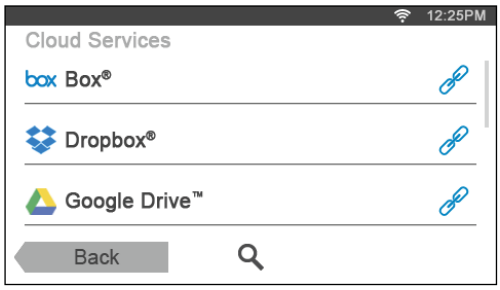

2 Select the destination you want to save the converted file to by performing either of the following:

- Tap a cloud service you want to save the converted file to, and then perform either of the following:
  – Tap the location you want to save the converted file to.

  NOTE:

  - If the location is not displayed, swipe the screen.

  – Search the files in the selected cloud service.
    a Tap 🔍 .
    b Enter the file name or keywords, and then tap `Search`.

  NOTE:

  - You can sort the results by tapping A↓Z and selecting the sorting order.

c Tap Back to return to the previous screen.

- Search the files across multiple cloud services.

  a Tap 🔍 .

  b Enter the file name or keywords, and then tap Search.

  NOTE:

  - You can sort the results by tapping A↓Z and selecting the sorting order.

  c Tap Back to return to the previous screen.

3 Tap Next.

4 Tap the File Name text box, and then enter the file name.

5 Tap the File Format box, and then select a file format.

6 Tap ⚙ , and then check and change the scan settings.

See "Smart OCR Scan" and "Scan Settings."

NOTE:

- You can save your print settings and file path to the cloud service as a favorite.
  1 Tap ⚙ in the Scan Settings screen.
  2 Name your favorite in the Save Favorite screen, and then tap Save.
- If you choose a name for a favorite that is the same as an existing favorite, the settings and the file path will be overwritten.
- You can delete an unnecessary favorite by tapping 🗑 .
- Once you save your settings as a favorite, you can recall those settings the next time you sign in to the Dell Document Hub from any printer of the same model.

7 Tap Scan.

When the document is loaded on the document glass, the screen prompts you for another page.

- If you want to scan another document, replace the document with a new document, and then tap Continue.
- When you have finished loading documents, tap Done.

Sending the Scanned Data to Yourself via E-Mail

The document can be scanned and sent to you as an attached file of an e-mail.

1 In the Dell Document Hub screen, tap E-mail Me.

The E-mail Me screen is displayed.

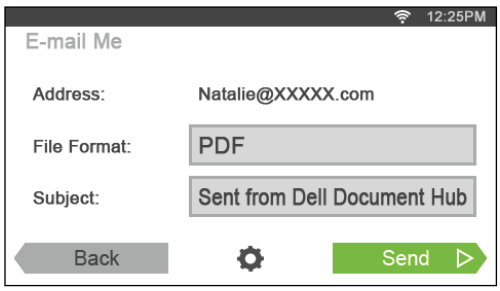

2 Tap the File Format box, and then select a file format.

3 Tap the Subject text box, and then enter the subject of the mail sent with the scanned data.

4 Tap ⚙, and then check and change the e-mail settings.

See "E-mail Me" and "Scan Settings."

NOTE:

- You can save your e-mail settings to the cloud service as a favorite.
  1 Tap ⚙ in the `E-mail Settings` screen.
  2 Name your favorite in the `Save Favorite` screen, and then tap `Save`.
- If you choose a name for a favorite that is the same as an existing favorite, the settings and the file path will be overwritten.
- You can delete an unnecessary favorite by tapping 🗑.
- Once you save your settings as a favorite, you can recall those settings the next time you sign in to the Dell Document Hub from any printer of the same model.

5 Tap `Send`.

When the document is loaded on the document glass, the screen prompts you for another page.

- If you want to scan another document, replace the document with a new document, and then tap `Continue`.
- When you have finished loading documents, tap `Done`.

Sending a Scanned Data of a Business Card to Yourself via E-Mail

Business cards can be scanned and converted to vCard files, and sent to you as an attached file of an e-mail.

1 In the `Dell Document Hub` screen, tap `Business Card Reader`.

The `Business Card Reader` screen is displayed.

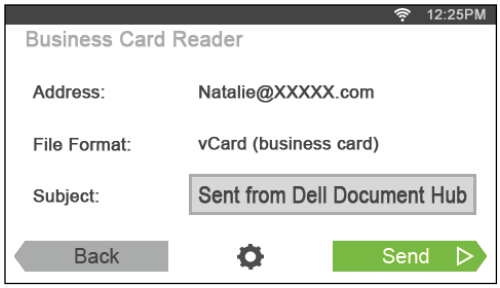

2 Tap the `Subject` text box, and then enter the subject of the e-mail sent with the vCard file.

3 Tap ⚙, and then check and change the e-mail settings.

a Tap `OCR Language`, and then select a language.

b Tap `Back` to return to the previous screen.

4 Tap `Send`.

When the document is loaded on the document glass, the screen prompts you for another page.

- If you want to scan another document, replace the document with a new document, and then tap `Continue`.
- When you have finished loading documents, tap `Done`.

5

Know Your Printer

Understanding the Software of Your Printer 272

User Authentication 286

Multiple Desktop - Tile Customization 290

Using the Address Book and Phone Book 292

Using Digital Certificates 298

Understanding Printer Messages 307

Specifications 317

Understanding the Software of Your Printer

Overview

Use the *Software and Documentation* disc to install a combination of software programs.

Item	Windows®	OS X	Linux
Dell Printer Hub/Dell Print Management Tool	●		
Printer Status Window	●	●	●
Status Monitor Console	●		●
Status Monitor Widget		●	
Tool Box	●		
Address Book Editor	●	●	
ScanButton Manager	●	●	
Dell™ Supplies Management System	●		
User Setup Disk Creating Tool	●		
App Manager	●		

(●: supported, Blank: not supported)

Dell Printer Hub/Dell Print Management Tool

NOTE:

- Dell Printer Hub is available on Dell H625cdw and Dell H825cdw.
- Dell Print Management Tool is available on Dell S2825cdn.
- It is supported on only Windows® 7 or later.

This software consolidates your printer management, monitoring tools and cloud connectivity.

You can conveniently access printer utilities, advanced scan features and printer/consumables details, and receive notifications on driver/software updates as well as printer status.

To launch the Dell Printer Hub/Dell Print Management Tool, click **Start** → **All Programs** → **Dell Printers** → **Dell Printer Hub** or **Dell Print Management Tool**.

The Dell Printer Hub and Dell Print Management Tool have the following software and directories:

- Address Book Editor

  See "Address Book Editor."
- Tool Box

  See "Tool Box."
- Printer Embedded Web Server (EWS)

  Displays the Dell Printer Configuration Web Tool. See "Dell™ Printer Configuration Web Tool."
- Configuration tool
- App Manager

  See "App Manager."

See the FAQ on the Dell Printer Hub or Dell Print Management Tool.

Printer Status Window

The **Printer Status** window alerts you when there is a warning or an error such as paper jams and low toner.

By default, the **Printer Status** window opens only when an error occur. When an error occur, the error message appears on the **Printer Status** window. You can set the **Printer Status** window to always stay open when printing in **Printing Status Window Properties**.

You can also check the toner level, quantity of paper remaining or configuration of the options for the printer.

See the help on the **Printer Status** window.

Status Monitor Console/Status Monitor Widget

Use the Status Monitor Console/Status Monitor Widget to manage multiple instances of the **Status Window** for a particular printer.

To start the Status Monitor Console, select a printer from the list view or **Printer Selection**, and then click the name of the printer to open the **Status Window** for that particular printer.

For OS X, see "Using the Status Monitor Widget for Macintosh."

For Linux, see "Using the Status Monitor Console for Linux."

Tool Box

The Tool Box allows you to view, specify, and diagnose the system settings. See the help on the Tool Box.

Address Book Editor

The Address Book Editor allows you to register the contact information such as phone number and e-mail address. See "Using Address Book Editor."

Dell™ Supplies Management System

You can use the Dell Supplies Management System to order consumables online or by phone from Dell.

See "Using the Dell Supplies Management System."

User Setup Disk Creating Tool

The User Setup Disk Creating Tool program is used to create driver installation packages that contain custom driver settings. The User Setup Disk Creating Tool program is located in the **MakeDisk** folder of the **Utilities** folder on the *Software and Documentation* disc. The print drivers that are used are also located on the *Software and Documentation* disc. A driver installation package can contain a group of saved print driver settings and other data for things such as:

- Print orientation and Multiple Up
- Watermarks
- Font references

If you want to install the print driver with the same settings on multiple computers

running the same operating system, create a setup disk in a media or in a server on the network. Using the setup disk that you have created reduces the amount of work required when installing the print driver.

- Install the print driver in the computer on which the setup disk is to be created.
- The setup disk can only be used on the operating system on which the disk was created or computers running the same operating system. Create a separate setup disk for each of the operating systems.

App Manager

The App Manager is a utility that lets you manage the apps on the printer.

NOTE:

- App Manager is supported only on Windows® 7 or later.

The following tasks can be performed from the App Manager:

- Install, update, and uninstall apps
- Backup and restore printer settings, address books, and apps

CAUTION:

- **Do not turn off the printer or the computer while backing up or restoring data.**

NOTE:

- The App Manager can backup the data of 10 printers. For each printer, up to five backup history can be cached.
- The following are not included in the backup data:
  - Settings data of Default Settings, Network Settings, Fax Settings, Maintenance, Secure Settings, and USB Settings
  - Data that is integral with other setting data such as digital certificates
  - Data that is specific to the printer such as an IP address
  - Data that is not permitted to be backed up due to security reasons
  - Settings about date and time, and also settings that are associated with date and time
  - Data that are considered invalid for settings of the printer
- The time to send and create backup files may take longer depending on the data size.
- The features of the App Manager may not be used when the printer has an error. If the App Manager does not respond, check and clear the status of the printer.

Preparing to Use the App Manager

To use the App Manager, it is recommended for your computer to have more than 25GB of storage space.

NOTE:

- Your computer needs to be connected to a network. USB connection is not supported.
- .Net Framework4.0 or later is required.

Using the App Manager

The following procedure uses Windows® 7/Windows® 10 as an example.

1. Click **Start** → **All Programs** → **Dell Printers** → **Dell Printer Hub** or **Dell Print Management Tool**.

   For Windows® 10: Click the Start button → **Dell Printer Hub** or **Dell Print Management Tool**.

2. Click **Printers**.

3. Click **Add Printer**.

4 Find the printer you want to register and click **Add**.

NOTE:

- If the printer you are looking for does not appear in the list, enter the IP address of the printer in the search text box.

5 Enter the same ID and password that is used for the Dell Printer Configuration Web Tool, and then click **OK**.

6 Click ←.

The screen returns to the printer list.

7 Click the printer you want to manage from the list.

NOTE:

- If the printer you are looking for does not appear in the list or cannot be accessed from the App Manager, check that **On** is selected for the check boxes of **Port9100** and **SNMP** in the Dell Printer Configuration Web Tool → **Print Server Settings** tab → **Port Settings**.

Using the Status Monitor Widget for Macintosh

Status Monitor Widget is a printer utility that promotes efficient use of the printer through the exchange of information between the Macintosh and the printer.

Status Monitor Widget

- Monitoring Dell Printers

  Allows you to check the status of Dell printers currently connected to your Macintosh
- Receiving Alerts

  Alerts you when there is a problem, such as paper jams or low toner
- Ordering Supplies

  Allows you to access the web site to order supplies

Before Installing the Status Monitor Widget

Operating Systems

- Mac OS X 10.7
- OS X 10.8
- OS X 10.9
- OS X 10.10

Network Protocols and Interfaces

- LPR
- Socket 9100
- Bonjour
- USB 2.0 and 1.1 (When connecting with multiple printers of the same model via USB cables, only the printer recognized first can be monitored in the Status Monitor Widget.)

Installing the Status Monitor Widget

1 Double-click the **Dell Color MFP H625cdw/Dell Color MFP H825cdw/Dell Color MFP S2825cdn** icon in the **Finder** window.

2 Follow the on-screen instructions.

When the **Install Succeeded** screen appears, the installation is complete.

NOTE:

- Entering the administrative login name and password are required during the installation process.

Opening and Closing the Status Monitor Widget

Opening the Status Monitor Widget

1 Click the **Dashboard** icon in the Dock.

2 Click the Plus (+) sign.

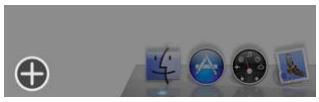

3 Click the icon of **Status Monitor** in the Widget Bar.

NOTE:

- If the message **Select a printer** is displayed, select the printer in **Preferences**. See "Preferences."

Closing the Status Monitor Widget

Click the Close (x) button in the upper-left corner of the **Printer Status** window.

Printer Status Window

When the Status Monitor Widget is activated, the **Printer Status** window appears on Dashboard.

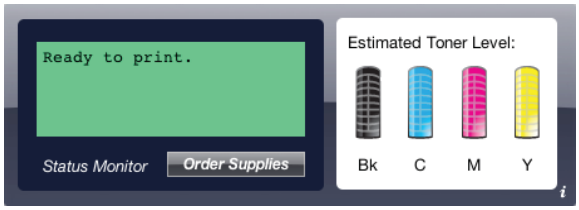

Printer Status Message Area

Displays a message of the current printer status.

NOTE:

- The Status Monitor Widget obtains the printer information at the updated interval that can be specified in **Preferences**. Also, the printer status is refreshed when Dashboard appears or **Preferences** is closed.
- If the Status Monitor Widget receives no response from the printer, the message **Cannot get printer information** is displayed.
- When the printer is connected via USB cable, you cannot check the status of the printer during a print or scan job.

Printer Status Image Area

Displays the image of printer condition.

- Estimated Toner Level image

  Displays the estimated toner level of each color if the printer is functioning properly.

  NOTE:

  - If the utility does not receive a response from the printer, the **Unknown** toner image is displayed.

- Printer error image

  Displays an indication image when an error occurs.

  When this image is displayed, the printer cannot be used.

Order Supplies Button

Displays the **Order** window.
To hide the **Order** window, click **Order Supplies** again.

Info (i) Button

Opens **Preferences**.

NOTE:

- The **info** (**i**) button appears on the lower-right corner of the window when the cursor is over the **Printer Status** window. The **info** (**i**) button is a standard used across all widgets.

Order Window

This window provides you with the information for ordering printer supplies online or by phone.

To open the **Order** window:

Click **Order Supplies** in the **Printer Status** window.

NOTE:

- The **Order** window appears when low toner is detected.

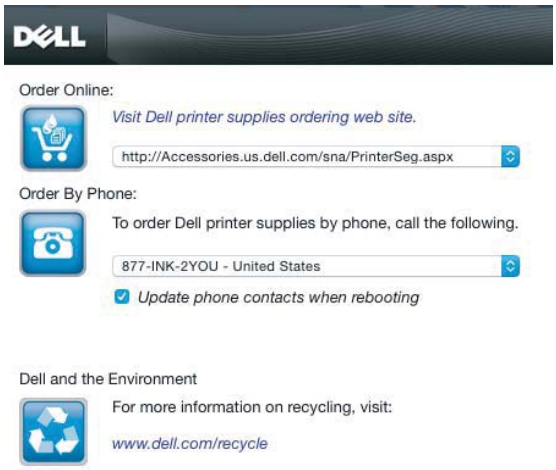

Order Online

- **Visit Dell printer supplies ordering web site.** hyperlink

  Displays the web site for ordering Dell printer supplies.

- URL list

  Displays a list of available URLs where you can order Dell printer supplies.

  Select a URL address to use when the **Visit Dell printer supplies ordering web site** hyperlink is clicked.

Order By Phone

- Phone number list

  Displays a list of available phone numbers that you can call to order Dell printer supplies.

- **Update phone contacts when rebooting** check box

  Select this check box to regularly update the phone number list.

Dell and the Environment

Click the hyperlink to access the web site about recycling.

Preferences

To open **Preferences**:

Click the **info** (**i**) button in the **Printer Status** window.

NOTE:

- The **info** (**i**) button appears on the lower-right corner of the window when the cursor is over the **Printer Status** window. The **info** (**i**) button is a standard used across all widgets.

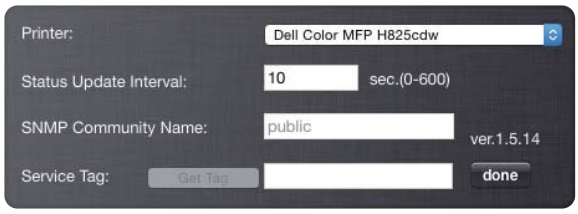

Printer

Displays a list of available printer names in the pull down menu. The first printer displayed in this list is set as default.

Status Update Interval

You can specify the update interval of the printer status. By default, it is set to obtain the printer information every 10 seconds.

SNMP Community Name

You can change the SNMP (Simple Network Management Protocol) community name if using default community name (public). Up to 31 characters can be entered.

Service Tag Button

Click this button to obtain the service tag.

NOTE:

- You cannot retrieve the service tag when the printer is connected via USB cable.

done Button

Click this button to return to the **Printer Status** window.

Using the Status Monitor Console for Linux

Status Monitor Console is a printer utility that promotes efficient use of the printer through the exchange of information between the Linux and the printer.

Status Monitor Console

- Monitoring Dell Printers
  Allows you to check the status of Dell printers currently connected to your Linux.
- Receiving Alerts
  Alerts you to problems, such as paper jams or low toner.
- Ordering Supplies
  Allows you to access the web site to order supplies.

Before Installing the Status Monitor Console

NOTE:

- The Status Monitor Console requires the following modules installed.
  - Python, PyGTK, Net-SNMP, cups-libs, and xdg-open
  Make sure that these modules are installed before you install the Status Monitor Console.
- The Status Monitor Console is available when the printer is connected to a network (LPR or Socket 9100). USB connection is not supported.

Distributions

- Red Hat Enterprise Linux 6 Desktop
- SUSE Linux Enterprise Desktop 11
- Ubuntu 12.04 LTS

Printing System

- Common UNIX Printing System (CUPS)

Installing the Status Monitor Console

1 Activate the terminal, and then log in as a super user.

2 Enter the following rpm command in the terminal window.
For Red Hat Enterprise Linux 6 Desktop and SUSE Linux Enterprise Desktop 11:

```
# rpm -ivh (Type the package file name)
```

For Ubuntu 12.04 LTS:

```
# dpkg -i (Type the package file name)
```

Starting the Status Monitor Console

1 Click **Dell Printers** → **Status Monitor Console**
See "Printer Selection Window."

2 Select the printer.
See "Printer Status Window."

Printer Selection Window

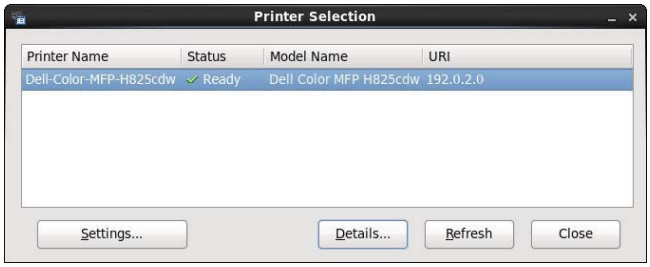

Printers List

All the printers registered in the Common UNIX Printing System (CUPS) are displayed in a list.

- Status icons:
  - Ready
  - Unknown/Offline/Toner Low/Paper Low
  - Door Open/Paper Jam/No Toner/Out Of Paper

Settings Button

Opens the **Settings** window.

Details Button

Opens the **Printer Status** window. If a non-supported printer is selected, it opens the Dell Printer Configuration Web Tool. See "Dell™ Printer Configuration Web Tool."

Refresh Button

Updates the information of printers.

Close Button

Closes the **Printer Selection** window.

Printer Status Window

When the printer is specified in the **Printer Selection** window, the **Printer Status** window appears.

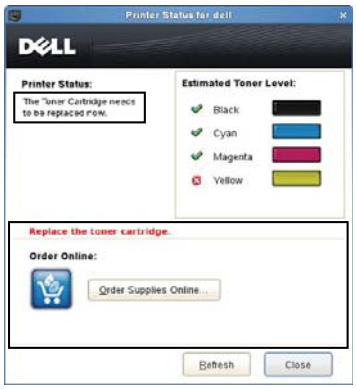

Printer Status Message Area

Displays a message of the current printer status.

NOTE:

- The Status Monitor Console obtains the printer information at the updated interval that can be specified in the **Settings** window. To refresh the printer status, click **Refresh**.
- If the Status Monitor Console receives no response from the printer, the message **Cannot get printer information** is displayed.

Printer Status Image Area

- Current Toner Status icons
  Displays icons of the current status of each toner.
  - The toner level is more than 30%.
  - The toner level is less than 29%.
  - The toner level is less than 9%.
  - The toner level is unknown.
- Estimated Toner Level images
  Informs about the amount of toner that remains for each color.

Toner Alert

Displays an alert message when any remaining toner is low, empty, or unknown.

Order Online

- **Order Supplies Online** button
  Displays the web site for ordering Dell printer supplies. This button appears when the amount of toners becomes less than 30%.

Refresh Button

Updates the status of the printer.

Close Button

Closes the **Printer Status** window.

Dell Supplies Management System Window

This window provides you with the information for ordering printer supplies by telephone or from the web site.

To open the **Dell Supplies Management System** window:

Click **Order Supplies Online** in the **Printer Status** window.

OR

Click **Dell Printers** → **Dell Supplies Management System**.

Select Printer Model

Select the printer model name.

Order Online

- **Order Supplies Online** button
  - When the Regular URL is selected in the **Select Reorder URL**:
    Displays **Service Tag** window.
  - When the Premier URL is selected in the **Select Reorder URL**:
    Displays the procurement and support web site.
- **Select Reorder URL**
  Displays a list of available URLs where you can order Dell printer supplies. Select a URL address to use when the **Order Supplies Online** button is clicked.
  - Regular URL: **http://accessories.us.dell.com/sna/PrinterSeg.aspx**
  - Premier URL: **http://premier.dell.com**

Order by Phone

- **To order Dell printer supplies by phone, call the following**
  Select your country with phone number from the list, and then call the displayed telephone number.
- **Update phone contacts when rebooting** check box
  Select this check box to regularly update the phone number list.

Dell and the Environment

Click the hyperlink to access the web site about recycling.

Close Button

Closes the **Dell Supplies Management System** window.

Service Tag Window

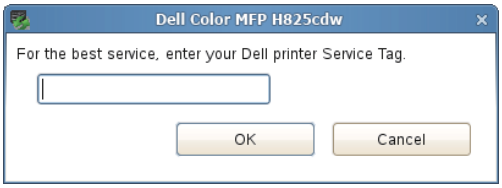

Enter the Dell printer service tag.

NOTE:

- For details about the service tag, see "Express Service Code and Service Tag."

Settings Window

Click **Settings** in the **Printer Selection** window.

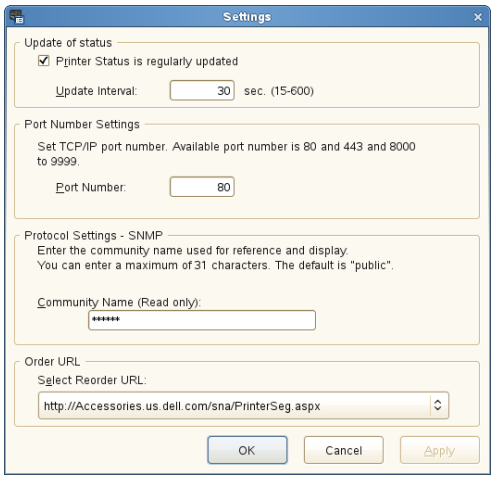

Update of status

- **Printer Status is regularly updated** check box

  Select the check box to enable the printer status to be updated by the specified interval.

- **Update interval** text box

  Specify the update interval of the printer status.

Port Number Settings

- **Port Number**

  Specify the port number in the **Port Number** text box to open the setting page of the printer in a web browser.

Protocol Settings - SNMP

- **Community Name**

  Enter the Community name of **SNMP** in the **Community Name** text box.

Order URL

- **Select Reorder URL**

The selected URL address is set as default web site for the **Select Reorder URL** in the **Dell Supplies Management System** window.

Software Update

Software, driver, and firmware updates can be downloaded from the Dell Support web site located at **www.dell.com/support**.

User Authentication

Using the user authentication setting, it is possible to create and manage up to 18 user accounts secured with a password. Each user of the accounts can customize the `Home` screen and save the changes.

You can select the user authentication method from either local authentication or remote authentication. To use the remote authentication method, the LDAP or Kerberos server is required to authenticate the user.

To select the user authentication method, see "**Desktop Login**" or "Desktop Authentication."

It is also possible to associate NFC (Near Field Communication) capable ID Cards to user account. When an ID card is associated with a user account, you can login to that user account by tapping the ID card to the NFC reader, or waving the ID card over the NFC reader.

NOTE:

- The printer supports the following card types:
  - MIFARE® Ultralight
  - MIFARE Standard (Classic) 1K
  - MIFARE Standard (Classic) 4K
- The NFC feature is available on Dell H625cdw and Dell H825cdw.
- The portal screen is available when you select the local authentication.
- Remote authentication is available for Dell S2825cdn only.

Creating and Editing the User Accounts

To use user authentication, you must first create a user account.

Creating a New User Account

1 Turn on the printer and wait until the portal screen is displayed.

NOTE:

- If other account was created and specified as `Initial Login`, the `Home` screen of the account appears.

2 Tap ⚙ .

If `Panel Lock Control` is set to `Enable`, enter the password. See "Panel Lock."

3 Tap `OK`.

The printer enters the edit mode, and `Add Account` is displayed in the portal screen.

NOTE:

- In the edit mode, each tile except `Add Account` has ⚙ .

4 Enter the account name, tap `Done`, and then select the tile color.

You can preview the image of your custom tile in `Preview`.

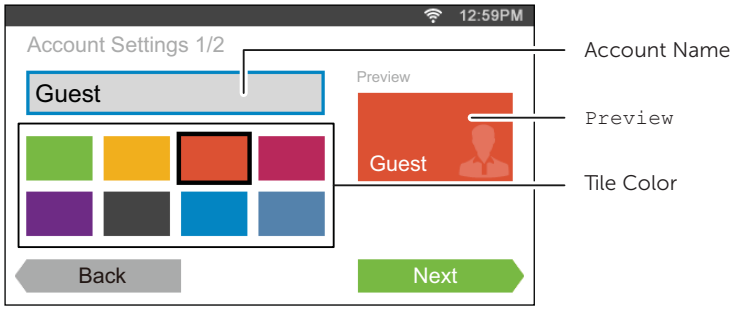

5 Tap `Next`.

6 Enter the account password and NFC ID.

To display the `Home` screen of your account when you turn on the printer, select the `Initial Login` check box.

NOTE:

- If no account is specified as `Initial Login`, the portal screen is displayed when you turn on the printer.
- You can create a new account without setting the account password and NFC ID.
- When the NFC Authentication is disabled, `NFC ID` is not displayed. NFC Authentication is available on Dell H625cdw and Dell H825cdw.
- When you use UID as the NFC ID, enter the hexadecimal characters. The characters A to F should be entered in the capital letters.

7 Tap `Done` → `Done`.

Editing the User Account

1 Tap ⚙ in the portal screen.

2 Tap `OK`.

3 Tap the account tile you want to edit.

4 Edit the account name, tile color, password, NFC ID, or `Initial Login`.

NOTE:

- When the NFC authentication is disabled, **NFC ID** is not displayed. NFC Authentication is available on Dell H625cdw and Dell H825cdw.

5 Tap `Done`.

Deleting the User Account

1 Tap ⚙ in the portal screen.

2 Tap `OK`.

3 Tap and hold the account tile you want to delete.

4 Drag the tile to 🗑 .

5 Tap `OK`.

Logging In to the User Account

There are two ways to log in to the account. One is to log in using the touch panel, and

the other is to log in using the NFC authentication card.

NOTE:

- NFC Authentication is available on Dell H625cdw and Dell H825cdw.

Logging In Using the Touch Panel

1 Start the printer and wait until the portal screen is displayed.

2 Tap the account tile you want to log in to.

NOTE:

- When the account you want to log in to does not require a password, skip step 3. The `Home` screen is displayed.

3 Enter the account password, and then tap `Login`.

Logging In Using the NFC Authentication Card

NOTE:

- NFC Authentication is available on Dell H625cdw and Dell H825cdw.
- To use the NFC authentication card, the following settings are required:
  - Enable the NFC authentication setting in Secure Settings of the operator panel. See "NFC Authentication."
  - Register your user account to the printer. See "Creating a New User Account."

1 Turn on the printer and wait until the portal screen is displayed.

NOTE:

- The NFC authentication is available only when the portal screen is displayed.

2 Wave the card over the NFC reader on the printer.

Logging In Using the Local Authentication or Remote Authentication

Specifying the User Authentication Method

Use the operator panel menu or the Dell Printer Configuration Web Tool. For details about how to specify the user authentication method, see "**Desktop Login**" or "Desktop Authentication."

Preparations for Remote Authentication

To use the remote authentication method, the printer needs to be specified so that the printer can access to the LDAP or Kerberos server, and that the users need to be registered to the Server Address Book. For details, see "Using the Server Address Book and Server Phone Book" and "Using the Address Book and Phone Book."

Logging In for Remote Authentication

The `Sign in` screen is displayed when the printer is turned on while the printer is specified to use the remote authentication method.

Enter the login name and password registered in the LDAP or Kerberos server to log in to the printer.

Logging Out

When there is an account which is specified as `Initial Login`, the `Home` screen of the account is always displayed after the printer is turned on. To log in to another account, you need to log out first.

1 Press the (**Log In/Out**) button.

Multiple Desktop - Tile Customization

The Home screen is like a desktop of your computer and customizable to suit your preference or work style.

For example, you can gather only the tiles you often use, or rearrange the tiles so that you can easily access the tiles you often use.

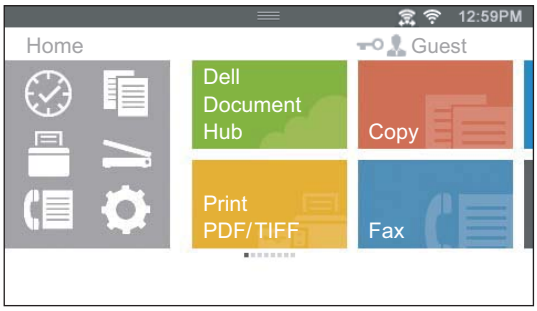

The tiles on the Home screen can be the shortcuts to the jobs to be performed on the printer, like "taking seven copies of the handouts for the weekly meeting in two-sided color copy" or "scanning the document and sending the scanned data to my boss by e-mail." If you create a tile for a job with such job settings, the printer changes the settings of the printer as you specified just by tapping the tile.

Adding a New Tile

You can select and add the tile from the pre-defined tiles, or you can create a new customized tile which includes specific settings for copy, fax, scan or print. Up to 28 tiles can be placed in your Home screen.

You can also add tiles to each of the copy, print, scan, and fax group screen that is displayed when tapping the icons in the Dock Menu. Up to 8 tiles can be placed in each group screen.

NOTE:

- If a tile is added to the Home screen, it will also be added to the relevant group screen. If a tile is added to a group screen, it will also be added to the Home screen.

Selecting From the Pre-defined Tiles

The printer offers the pre-defined tiles which include the default job settings.

1 On the Home screen or group screen, tap Add App.

NOTE:

- If the maximum number of tiles have been reached in a group screen, the tiles relevant to the group is not displayed in the list.

2 Tap the tile you want to add to your Home screen or group screen.

is displayed on the upper-right of the tile when you add the tile in your Home screen.

Creating a New Tile Including the Job Settings

You may often use the same settings to copy a certain document, for example. You can create the tile including those job settings and save it in your Home screen.

Creating Your Custom Tile

The following explanation is an example to create your custom tile for copying.

To create custom tiles for other jobs such as faxing, scanning, or printing, follow the same procedures on the job settings screen of each job.

1 Tap the `Copy` tile in your `Home` screen.

2 Tap the setting tiles and change the copy options as needed.

See "Copy."

3 Tap .

4 Tap the text box, and then enter the name of your settings.

5 Tap the color tile you want to set as your custom tile.

NOTE:

- You can preview the image of your custom tile in `Preview`.

6 Tap `Save As`.

NOTE:

- When a tile has the Lock icon, that function is controlled by the `Functions Control` setting. To enable the function, you need to enter the password. See "Functions Control."
- When you save the job settings for `Fax` or `Scan to Email` as a custom tile, recipient information is saved together with the settings. To prevent from sending faxes or e-mails to wrong recipients, make sure that the fax numbers or e-mail addresses of the recipients displayed on the touch panel are correct.
  To prevent others from using customized tiles with personal information, log out from your user account after you finish using the printer.

Editing Your Custom Tile

You can edit the job settings saved in your custom tile.

1 Tap the tile you want to edit in your `Home` screen or group screen.

2 Change the job settings as needed.

3 Tap .

4 Tap the text box to name your settings if you want to rename your settings.

5 Tap the color tile if you want to change the color of the tile.

6 Tap `Save`.

NOTE:

- If you tap `Save As` instead, the new tile is added in your `Home` screen.

Moving or Deleting Your Tiles

You can move or delete your tiles from your `Home` screen or group screen.

See "Moving, Adding or Deleting the Tiles."

Using the Address Book and Phone Book

There are several address books available for Scan and Fax functions. Address books help you organize contact information, such as e-mail addresses, fax numbers and server information, and quickly choose the recipient or locate the address. The address book data can be obtained from the printer or a remote LDAP server.

NOTE:

- Phone Book is described as one of Address Books in this section.
- For details about how to setup the LDAP server, see "LDAP Server" and "LDAP User Mapping." For details about how to obtain e-mail addresses and fax numbers from LDAP servers, see "Using the Server Address Book and Server Phone Book."

Types of Address Books

- E-mail Address Book (for Scan to Email)

  E-mail addresses registered for sending the scanned data via e-mail
- E-mail Group (for Scan to Email)

  Groups of e-mail addresses registered for sending the scanned data via e-mail
- LDAP Server Address Book (for Scan to Email)

  E-mail addresses registered in the LDAP server for sending the scanned data via e-mail
- Network Address Book (for Scan to Network Folder)

  Computer and FTP server information registered for sending the scanned data to a computer or ftp server
- Phone Book (for Fax)

  Fax numbers registered for sending scanned data from the printer
- Group Dial (for Fax)

  Groups of fax numbers registered for sending scanned data from the printer
- LDAP Server Phone Book (for Fax)

  Fax numbers registered in the LDAP server for sending scanned data from the printer
- PC Fax Address Book (for Direct Fax)

  Fax numbers registered for sending scanned data from your computer
- PC Fax Address Book for group (for Direct Fax)

  Groups of fax numbers registered for sending scanned data from your computer

Adding and Editing Entries to the Address Books

There are following three ways to add or edit entries to the address books:

- Operator panel of the printer
- Address Book Editor
- Dell Printer Configuration Web Tool

Functions	Features	Types of Address Books	Entry Method		
			Operator Panel on the Printer	Address Book Editor	Dell Printer Configuration Web Tool
Scan	E-mail	Address Book		●	●
		E-mail Group		●	●
		Server Address Book (LDAP server)			
	Network	Address Book		●	●
Fax	Fax	Phone Book	●	●	●
		Group Dial	●	●	●
		Server Phone Book (LDAP server)			
	Direct Fax	PC Fax Address Book		●	
		PC Fax Address Book - group		●	

(●: supported, Blank: not supported)

Using Operator Panel of the Printer

You can directly enter the fax numbers on the operator panel.

NOTE:

- For details about how to add a new entry, see "Setting Speed Dial."

Using Address Book Editor

You can use Address Book Editor installed on your computer to add or edit entries. Address Book Editor is synchronized with the address books of the printer and updated simultaneously as you save changes to the entries in Address Book Editor.

NOTE:

- When the printer and your computer is connected via USB, you must install the scanner driver.

With Address Book Editor, you can:

- Retrieve data from the address books of the printer at startup.
- Synchronize with the printer.
- Import the Address Book data from CSV file, WAB file, MAPI, and LDAP server.
- Export the Address Book data into a CSV file.

  NOTE:

  - Do not edit the exported CSV file with programs other than the Address Book Editor. Editing the CSV file with other programs may corrupt the address data.

Address Book Panel

There are two address books you can manage in the Address Book Editor: Device Address Book for Fax, E-mail, and Server and PC Fax Address Book for Direct Fax.

Editing an Entry

1 Select an Address Book that the entry you want to edit is stored.

2 Select an entry that you want to edit.

3 Click **Edit**, and then enter new information.

4 Click **Save**.

NOTE:

- When the address book entries are updated, it synchronizes with the printer and updates the address books of the printer simultaneously.

Using Dell Printer Configuration Web Tool

You can use Dell Printer Configuration Web Tool using a general web browser.

NOTE:

- For details about how to add a new entry, see "Address Book."
- When the address book entries are updated, the address books of the printer are also updated simultaneously.

Using the Server Address Book and Server Phone Book

With the **E-mail Server Address Book** and the **Fax Server Phone Book**, you can specify an e-mail address or fax number of a recipient registered in the external LDAP server when sending a scanned data with e-mail or fax.

To use the **E-mail Server Address Book** and the **Fax Server Phone Book**, the printer needs to be configured in order to access the external LDAP server.

NOTE:

- To configure the settings of the external LDAP server, contact your system administrator.

Preparing the Printer to Access the External LDAP Server

Set the following items using the Dell™ Printer Configuration Web Tool.

- Authentication type
- LDAP Server
- LDAP User Mapping

Starting the Dell Printer Configuration Web Tool

To start the Dell Printer Configuration Web Tool, enter the IP address of the printer in the address bar of a web browser.

If you do not know the IP address of the printer, verify the IP address by using the operator panel, printing the system settings report, or using the ping command. See "Verifying the IP Settings."

Setting Authentication Type

1 Click **Print Server Settings** → the **Security** tab → **Authentication System**.

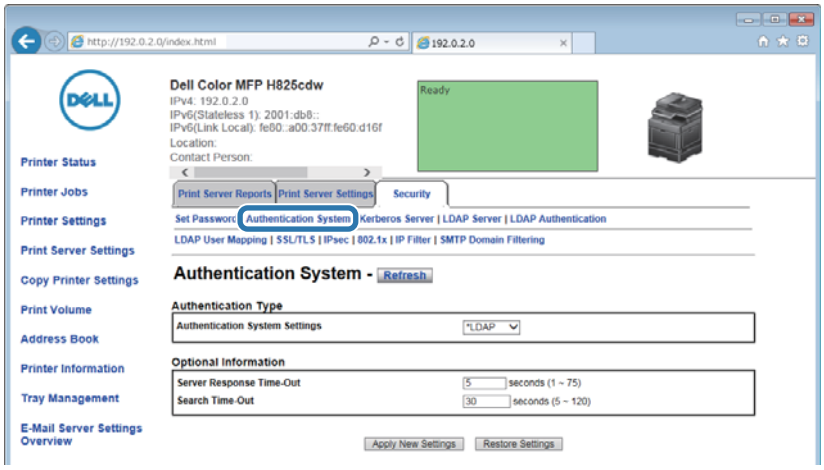

2 In the **Authentication System Settings** drop-down list box under **Authentication Type**, select **LDAP** as the authentication method, and then click **Apply New Settings**.

NOTE:

- When the server you are accessing uses the Kerberos authentication, select **Kerberos** as the authentication method. To set the information necessary to access the Kerberos server, enter the information in **Kerberos Server** under the **Security** tab. See "Kerberos Server."

3 Click **Restart Printer**.

Setting LDAP Server

NOTE:

- When SSL/TLS communication is required to access the LDAP server, select the **Enable** check box for **LDAP-SSL/TLS Communication** in **SSL/TLS** under the **Security** tab. See "SSL/TLS."

1 Click **Print Server Settings** → the **Security** tab → **LDAP Server**.

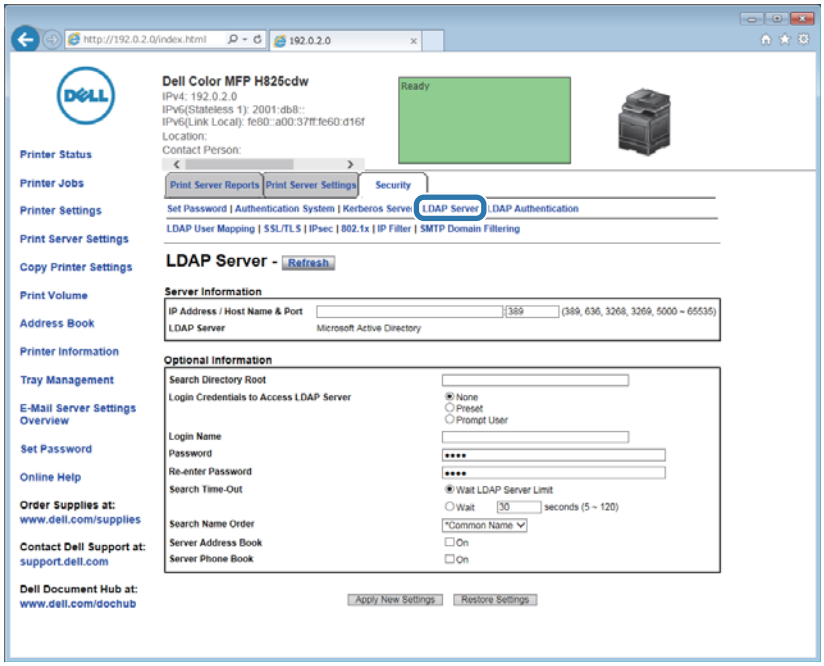

2 In the **IP Address/Host Name & Port** text box under **Server Information**, enter IP address or the host name, and the port number.

The port number must be 389, 3268, or between 5000 and 65535.

NOTE:

- When LDAPS communication is required, set the port number to 636, and when you use the global catalog, set the port number to 3269.

3 Under **Optional information**, set the following items.

For details about configuring each item, contact your network administrator.

a In the **Search Directory Root** text box, enter the search directory root.

b In **Login Credentials to Access LDAP Server**, select credential used to access the LDAP server.

c In the **Login Name** text box, enter the login name.

d In the **Password** text box, enter the login password using 1 to 127 alphanumeric characters. If the password is left blank (NULL), you cannot log in to a server.

e In the **Re-enter Password** text box, enter the login password again to check it.

f In **Search Time-Out**, select **Wait LDAP Server Limit** if you want to follow the time specified by the LDAP server. Select **Wait** if you want to specify the time.

g In the **Search Name Order** drop-down list box, specify the search order.

h In **Server Address Book**, select the check box if you want to enable the server address book.

i In **Server Phone Book**, select the check box if you want to enable the server phone book.

4 Click **Apply New Settings**.

5 Click **Restart Printer**.

Setting LDAP User Mapping

1 Click **Print Server Settings** → the **Security** tab → **LDAP User Mapping**.

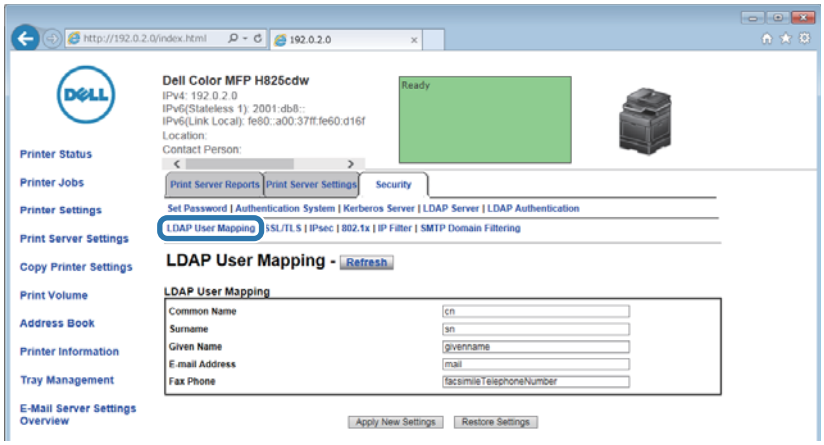

2 Specify the attribute names used in the LDAP server.

NOTE:

- If the attribute names are not customized in the LDAP server, leave the settings in this step as they are by default.

3 Click **Apply New Settings**.

4 Click **Restart Printer**.

Sending an E-mail With the Scanned Data Using the E-mail Server Address Book

1 Press the (**Home**) button.

2 Tap → `Scan to Email`.

3 Tap `Address Book`.

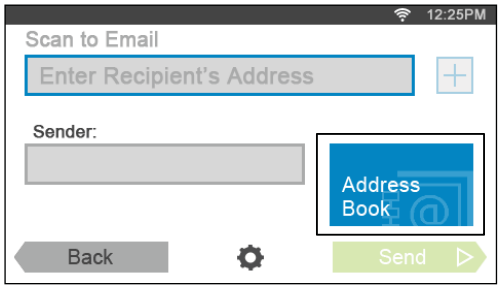

4 Tap `Network Address Book`.

5 Enter a keyword using the keyboard, and then tap `Search`.

6 Tap a recipient from the search result, and then tap `Done`.

7 Tap `Send`.

Sending a Fax Using the Fax Server Phone Book

1 Press the (**Home**) button.

2 Tap → `Fax`.

3 Tap `Phone Book`.

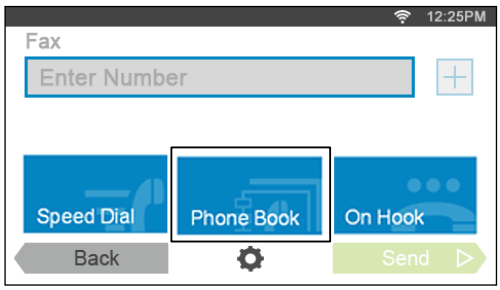

4 Tap `Network Phone Book`.

5 Enter a keyword using the keyboard, and then tap `Search`.

6 Tap a recipient from the search result, and then tap `Done`.

7 Tap `Send`.

Using Digital Certificates

The authentication feature using digital certificates upgrades security when sending print data or setting data.

This chapter describes how to manage digital certificates.

The printer supports the following digital certificate formats.

- PKCS#12
  HTTPS, IPsec (PKI), Wi-Fi (WPA-Enterprise)
- PKCS#7 (for CSR)
  HTTPS, IPsec (PKI)

NOTE:

- For details about digital certificate error, see "Understanding Printer Messages" and "Digital Certificate Problems."

The following is a typical setup flow for using digital certificates.

Prepare to manage digital certificates.
- Set HTTPS Communication

↓

Import and set digital certificates.
- Import a Digital Certificate
- Set a Digital Certificate
- Check the Settings of a Digital Certificate

↓

Set various security features using digital certificates.

Managing Certificates

This section describes how to manage digital certificates as follows:

- "Preparing to Use HTTPS Communication"
- "Creating and Downloading a Certificate Signing Request (CSR)"
- "Importing a Digital Certificate"
- "Setting a Digital Certificate"
- "Confirming the Settings of a Digital Certificate"
- "Deleting a Digital Certificate"
- "Exporting a Digital Certificate"

Preparing to Use HTTPS Communication

Before managing digital certificates, set HTTPS communication with a self-signed certificate.

1. Start the Dell Printer Configuration Web Tool.
   See "Starting the Dell Printer Configuration Web Tool."
2. Click **Print Server Settings** → the **Security** tab → **SSL/TLS**.
3. Click **Generate Self-Signed Certificate** of **Machine Digital Certificate**.

4 Select the size of public key from the list of **Size of Public Key**.

5 Specify the issuer of SSL self-signed certificate.

6 Click **Generate Signed Certificate**.

After the self-signed certificate is generated, the **Restart Printer** button appears.

7 Click **Restart Printer**.

8 Repeat steps 2 to 4.

The **SSL/TLS** page is displayed.

9 When the self-signed certificate is set correctly, the **HTTP- SSL/TLS Communication** column is set to **Enable**, select the **Enable** check box.

Creating and Downloading a Certificate Signing Request (CSR)

NOTE:

- To download a CSR from the printer, you must set up HTTPS communication. See "Preparing to Use HTTPS Communication."

1 Start the Dell Printer Configuration Web Tool.

See "Starting the Dell Printer Configuration Web Tool."

2 Click **Print Server Settings** → the **Security** tab → **SSL/TLS**.

3 Click **Certificate Signing Request (CSR)**.

4 Specify each item of certificate signing request.

5 Click **Apply New Settings**.

6 Check the settings of certificate signing request, and then click **Download**.

7 Save a CSR file to your computer.

Use this CSR to receive a signed certificate from a trusted certificate authority.

Importing a Digital Certificate

CAUTION:

- **Before importing a certificate file, backup the certificate file.**

NOTE:

- To manage digital certificates, you must set up HTTPS communication. See "Preparing to Use HTTPS Communication."
- Make sure to import the certificate with Internet Explorer.
- After importing a PKCS#12 format certificate, the secret key is not exported even if you execute exporting.

1 Start the Dell Printer Configuration Web Tool.

See "Starting the Dell Printer Configuration Web Tool."

2 Click **Print Server Settings** → the **Security** tab → **SSL/TLS**.

3 Click **Upload Signed Certificate** of **Machine Digital Certificate**.