4 Enter a password.

NOTE:

- The password is not necessary when importing a PKCS#7 format certificate, which has the filename extension of p7b.

5 Re-enter the password.

6 Click **Browse** of **File Name,** and then select the file to be imported.

7 Click **Import**.

## Setting a Digital Certificate

NOTE:

- To manage digital certificates, you must set up HTTPS communication. See "Preparing to Use HTTPS Communication."

1 Start the Dell Printer Configuration Web Tool.

See "Starting the Dell Printer Configuration Web Tool."

2 Click **Print Server Settings** → the **Security** tab → **SSL/TLS** → **Certificate Management**.

3 Perform the following:

To set a Wireless LAN (Server) certificate, select **Trusted Certificate Authorities** within **Category**.

To set a certificate of SSL Server, SSL Client, IPsec, or Wireless LAN (Client), select **Local Device**.

4 Select the purpose of use from the **Certificate Purpose** list.

5 Click **Display the List**.

NOTE:

- If the list includes more than 20 certificates, click **Next** to display the next page.

6 Select the certificate to associate. At this time, check that **Validity** of the certificate selected is set to **Valid**.

7 Click **Certificate Details**.

8 Check the content, and then click **Use This Certificate** at the upper-right corner.

## Confirming the Settings of a Digital Certificate

NOTE:

- To manage digital certificates, you must set up HTTPS communication. See "Preparing to Use HTTPS Communication."

1 Start the Dell Printer Configuration Web Tool.

See "Starting the Dell Printer Configuration Web Tool."

2 Click **Print Server Settings** → the **Security** tab → **SSL/TLS** → **Certificate Management**.

3 Click **Certificate Management**.

4 Select the category from the **Category** list.

5 Select the purpose of use from the **Certificate Purpose** list.

6 Click **Display the List**.

NOTE:

- If the list includes more than 20 certificates, click **Next** to display the next page.

The certificate displayed with an asterisk as "***Valid**" in the **Validity** column is the certificate associated with the purpose of use and currently used.

## Deleting a Digital Certificate

NOTE:

- To manage digital certificates, you must set up HTTPS communication. See "Preparing to Use HTTPS Communication."

1 Start the Dell Printer Configuration Web Tool.

See "Starting the Dell Printer Configuration Web Tool."

2 Click **Print Server Settings** → the **Security** tab → **SSL/TLS** → **Certificate Management**.

3 Select the category from the **Category** list.

4 Select the purpose of use from the **Certificate Purpose** list.

5 Click **Display the List**.

NOTE:

- If the list includes more than 20 certificates, click **Next** to display the next page.

6 Select the certificate to be deleted.

7 Click **Certificate Details**.

8 To delete the selected certificate, click **Delete** at the upper-right corner.

NOTE:

- When a certificate is deleted, the features associated with the deleted certificate are disabled. To delete a certificate being used, either set the feature to OFF in advance or switch the association to another certificate, and then switch to another operation mode if possible before deleting the certificate.

- For an SSL Server, sets the HTTP-SSL/TLS and IPPS communication to OFF.
- For an SSL Client, set the LDAP-SSL/TLS, SMTP-SSL/TLS, and IEEE 802.1x (EAP-TLS) setting to OFF.
- For IPsec, change the IKE setting to Pre-Shared Key or set the feature to OFF.
- For wireless LAN, change the wireless security setting to other than WPA-Enterprise before deleting the certificate. Wireless network is available on Dell H625cdw and Dell H825cdw.

## Exporting a Digital Certificate

NOTE:

- To manage digital certificates, you must set up HTTPS communication. See "Preparing to Use HTTPS Communication."
- Since the secret key is not exported, an imported PKCS#12 format certificate can be exported only as a PKCS#7 certificate.

1 Start the Dell Printer Configuration Web Tool.

See "Starting the Dell Printer Configuration Web Tool."

2 Select **Print Server Settings** → the **Security** tab → **SSL/TLS** → **Certificate Management**.

3 Select the category from the **Category** list.

4 Select the purpose of use from the **Certificate Purpose** list.

5 Click **Display the List**.

**NOTE:**

- If the list includes more than 20 certificates, click **Next** to display the next page.

6 Select the certificate to be exported.

7 Click **Certificate Details**.

8 Click **Export This Certificate**.

# Setting the Features

You can set various security features using digital certificates.

- "Setting the Certificate in the IPsec Digital Signature Mode"
- "Setting the SSL-Use Server Certificate (HTTP/IPP)"
- "Setting SMTP-SSL/TLS Communication"
- "Setting LDAP-SSL/TLS Communication"
- "Setting for Wireless LAN WPA-Enterprise (EAP-TLS)"
- "Setting for Wireless LAN WPA-Enterprise (PEAPV0-MS-CHAPV2, EAP-TTLS PAP, EAP-TTLS CHAP)"
- "Setting Client Certificate for IEEE 802.1x (EAP-TLS)"

## Setting the Certificate in the IPsec Digital Signature Mode

**NOTE:**

- To manage digital certificates, you must set up HTTPS communication. See "Preparing to Use HTTPS Communication."

1 Import the certificate to be used with IPsec. See "Importing a Digital Certificate."

2 Set the certificate to be used with IPsec. See "Setting a Digital Certificate."

3 Make sure that the certificate is set correctly in IPsec. See "Confirming the Settings of a Digital Certificate."

4 Select **Print Server Settings** → the **Security** tab → **IPsec**.

5 Select the **Enable** check box for **Protocol**.

6 Click **Digital Signature** from the **IKE** list.

7 Set each item, as necessary.

8 Click **Apply New Settings**.

After restarting the printer, IPsec communication using digital signatures is enabled. You can execute IPsec communication (Digital Signature Mode) between the printer

and the network device such as PC on which the certificate and IPsec are set identically as on the printer.

## Setting the SSL-Use Server Certificate (HTTP/IPP)

**NOTE:**

- To manage digital certificates, you must set up HTTPS communication. See "Preparing to Use HTTPS Communication."

1 Import the certificate to be used with the SSL-use server. See "Importing a Digital Certificate."

2 Set the certificate to be used with the SSL-use server. See "Setting a Digital Certificate."

3 Make sure that the certificate is set correctly. See "Confirming the Settings of a Digital Certificate."

**NOTE:**

- Check that the newly set certificate, not the self-signed certificate, is associated.

4 After restarting the printer, the certificate set as described above is used as the server certificate when executing communication with HTTP/IPP-SSL/TLS.

## Setting SMTP-SSL/TLS Communication

1 Start the Dell Printer Configuration Web Tool.
See "Starting the Dell Printer Configuration Web Tool."

2 Click **Print Server Settings** → the **Security** tab → **SSL/TLS**.

3 Select the **Enable** check box for **SMTP-SSL/TLS Communication**.

4 Click **Apply New Settings**.
The printer is restarted and **SMTP-SSL/TLS Communication** is enabled.

## Setting LDAP-SSL/TLS Communication

1 Start the Dell Printer Configuration Web Tool.
See "Starting the Dell Printer Configuration Web Tool."

2 Click **Print Server Settings** → the **Security** tab → **SSL/TLS**.

3 Select the **Enable** check box for **LDAP-SSL/TLS Communication**.

4 Click **Apply New Settings**.
The printer is restarted and **LDAP-SSL/TLS Communication** is enabled.

## Setting for Wireless LAN WPA-Enterprise (EAP-TLS)

**NOTE:**

- To manage digital certificates, you must set up HTTPS communication. See "Preparing to Use HTTPS Communication."
- WPA-Enterprise is available only when **Infrastructure** is selected as **Network Type**.
- Make sure to import the certificate with Internet Explorer.
- After importing a PKCS#12 format certificate, the secret key is not exported even if you execute exporting.
- Wireless network is available on Dell H625cdw and Dell H825cdw.

1. Import the certificate to be used with Wireless LAN (server or root certificate). See "Importing a Digital Certificate."
2. Set the digital certificate for wireless LAN (server or root certificate).
   - **a** Start the Dell Printer Configuration Web Tool.
     See "Starting the Dell Printer Configuration Web Tool."
   - **b** Click **Print Server Settings** → the **Security** tab → **SSL/TLS** → **Certificate Management**.
   - **c** Click **Trusted Certificate Authorities** within **Category**.
   - **d** Select the Wireless LAN (Client) of use from the **Certificate Purpose** list.
   - **e** From **Certificate Order**, select how the certificates are sorted in **Certificate List**. This setting is not necessary if you do not need to specify the order for the certificates.
   - **f** Click **Display the List**.
   - **g** Select the certificate to associate. At this time, check that **Validity** of the certificate selected is set to **Valid**.
   - **h** Click **Certificate Details**.
   - **i** Check the content, and then click **Use This Certificate** at the upper-right corner.
3. Make sure that the certificate is set correctly. See "Confirming the Settings of a Digital Certificate."
4. Import the certificate to be used with Wireless LAN (client or client certificate). See "Importing a Digital Certificate."
5. Set the digital certificate for wireless LAN (client or client certificate).
   - **a** Start the Dell Printer Configuration Web Tool.
     See "Starting the Dell Printer Configuration Web Tool."
   - **b** Click **Print Server Settings** → the **Security** tab → **SSL/TLS** → **Certificate Management**.
   - **c** Click **Local Device** within **Category**.
   - **d** Select the Wireless LAN (Client) of use from the **Certificate Purpose** list.
   - **e** From **Certificate Order**, select how the certificates are sorted in **Certificate List**. This setting is not necessary if you do not need to specify the order for the certificates.
   - **f** Select the certificate to associate. At this time, check that **Validity** of the certificate selected is set to **Valid**.
   - **g** Click **Certificate Details**.
   - **h** Check the content, and then click **Use This Certificate** at the upper-right corner.

6 Make sure that the certificate is set correctly. See "Confirming the Settings of a Digital Certificate."

7 Set WPA-Enterprise for EAP-TLS.

a Start the Dell Printer Configuration Web Tool.

See "Starting the Dell Printer Configuration Web Tool."

b Click **Print Server Settings** → the **Print Server Settings** tab → **Wi-Fi**.

c Click **WPA-Enterprise-AES/WPA2-Enterprise-AES** from the **Encryption list** of **Secure Settings**.

NOTE:

- **WPA-Enterprise-AES/WPA2-Enterprise-AES** becomes available only when the following steps are set correctly.
  - Importing a Digital Certificate
  - Setting a Digital Certificate
  - Confirming the Settings of a Digital Certificate

d Set **EAP-Identity** of **WPA-Enterprise**.

e Select **EAP-TLS** from the **Authentication Method** list of **WPA-Enterprise**.

f Click **Apply New Settings**.

## Setting for Wireless LAN WPA-Enterprise (PEAPV0-MS-CHAPV2, EAP-TTLS PAP, EAP-TTLS CHAP)

NOTE:

- To manage digital certificates, you must set up HTTPS communication. See "Preparing to Use HTTPS Communication."
- WPA-Enterprise is available only when **Infrastructure** is selected as **Network Type**.
- Make sure to import the certificate with Internet Explorer.
- After importing a PKCS#12 format certificate, the secret key is not exported even if you execute exporting.
- Wireless network is available on Dell H625cdw and Dell H825cdw.

1 Import the certificate to be used with Wireless LAN (server or root certificate). See "Importing a Digital Certificate."

2 Set the digital certificate for wireless LAN (server or root certificate).

a Start the Dell Printer Configuration Web Tool.

See "Starting the Dell Printer Configuration Web Tool."

b Click **Print Server Settings** → the **Security** tab → **SSL/TLS** → **Certificate Management**.

c Click **Trusted Certificate Authorities** within **Category**.

d Select the purpose of use from the **Certificate Purpose** list.

e Click **Display the List**.

f Select the certificate to associate. At this time, check that **Validity** of the certificate selected is set to **Valid**.

g Click **Certificate Details**.

h Check the content, and then click **Use This Certificate** at the upper-right corner.

3 Make sure that the certificate is set correctly.

a Start the Dell Printer Configuration Web Tool.

See "Starting the Dell Printer Configuration Web Tool."

b Click **Print Server Settings** → the **Security** tab → **SSL/TLS** → **Certificate Management**.

c Click the category from the **Category** list.

d Select the Wireless LAN (Server) of use from the **Certificate Purpose** list.

e From **Certificate Order**, select how the certificates are sorted in **Certificate List**. This setting is not necessary if you do not need to specify the order for the certificates.

f Click **Display the List**.

The certificate displayed with an asterisk as "***Valid**" in the **Validity** column is the certificate associated with the use purpose and actually used.

4 Set WPA-Enterprise for PEAPV0-MS-CHAPV2, EAP-TTLS PAP, or EAP-TTLS CHAP.

a Start the Dell Printer Configuration Web Tool.

See "Starting the Dell Printer Configuration Web Tool."

b Click **Print Server Settings** → the **Print Server Settings** tab → **Wi-Fi**.

c Click **WPA-Enterprise-AES/WPA2-Enterprise-AES** from the **Encryption list** of **Secure Settings**.

**NOTE:**

- **WPA-Enterprise-AES/WPA2-Enterprise-AES** becomes available only when the following steps are set correctly:
  - Importing a Digital Certificate
  - Setting a Digital Certificate
  - Confirming the Settings of a Digital Certificate

d Set **EAP-Identity**, **Login Name**, and **Password** of **WPA-Enterprise**.

e Select either of the following from the **Authentication Method** list of **WPA-Enterprise**:

- **PEAPV0 MS-CHAPV2**
- **EAP-TTLS PAP**
- **EAP-TTLS CHAP**

f Click **Apply New Settings**.

## Setting Client Certificate for IEEE 802.1x (EAP-TLS)

**NOTE:**

- To manage digital certificates, you must set up HTTPS communication. See "Preparing to Use HTTPS Communication."
- This feature is enabled only when Enable is set for IEEE 802.1x (EAP-TLS).

1 Import a certificate to be used with SSL Client. See "Importing a Digital Certificate."

2 Set a certificate to be used with SSL Client. See "Setting a Digital Certificate."

3 Make sure that the certificate is set correctly. See "Confirming the Settings of a Digital Certificate."

4 After restarting the printer, the IEEE 802.1x (EAP-TLS) certificate is presented when IEEE 802.1x communication with the RADIUS server starts. When the RADIUS server is set to require a client certificate, the client certificate provided by the printer is verified by the RADIUS server.

# Understanding Printer Messages

The touch panel displays error messages describing the current state of the printer and indicates possible printer problems you must resolve. This chapter provides a list of status codes or error messages, and informs you what you can do to clear error messages. When you contact customer support about an error, have the status codes and messages ready.

**CAUTION:**

- **When an error occurs, the print data remaining on the printer and the information accumulated in the memory of the printer may be corrupted.**

**NOTE:**

- A status code is listed in an error message.
- For status codes that are not listed in this chapter, refer to instructions in each error messages.

## Status Codes

| Status-Code | What you can do |
|---|---|
| 004-310 | Turn off the printer. Make sure that the tray is correctly installed, and then turn on the printer. Contact customer support if this failure is repeated. |
| 005-121 | Open the Duplex Automatic Document Feeder (DADF) cover and remove the jammed documents. |
| 009-340 | Turn off the printer. Clean the Color Toner Density (CTD) sensor with a clean dry cotton swab, and then turn on the printer. Contact customer support if this failure is repeated. See "Cleaning the Color Toner Density (CTD) Sensor." |
| 009-360 | Turn off the printer. Make sure that toner cartridge of the specified color is correctly installed, and then turn on the printer. The status code differs depending on the color of the toner cartridge. Contact customer support if this failure is repeated. See "Replacing the Toner Cartridges." |
| 009-361 | |
| 009-362 | |
| 009-363 | |
| 009-367 | |
| 009-368 | |
| 009-369 | |
| 009-370 | |
| 010-377 | Turn off the printer, and then turn it on again. Contact customer support if this failure is repeated. |
| 016-338 | Turn off the printer, and then turn it on again. Contact your system administrator if this failure is repeated. |
| 016-404 | Contact your system administrator. For details about digital certificate problems, see "Digital Certificate Problems." |
| 016-405 | Security setting mismatch. Initialize the security setting, and then restart the printer by turning off the printer and then on again. Contact your system administrator for the security resetting. |
| 016-503 | Unable to resolve the e-mail SMTP server hostname. Tap `Close`, or wait for 60 seconds for the printer to recover. Make sure that SMTP server and DNS server are set correctly. |
| 016-504 | Unable to resolve the e-mail POP3 server hostname. Tap `Close`, or wait for 60 seconds for the printer to recover. Make sure that user name and password for POP3 server and DNS server are set correctly. |

| Status-Code | What you can do |
|---|---|
| 016-505 | E-mail POP3 server login error. Tap `Close`, or wait for 60 seconds for the printer to recover. Make sure that user name and password used for POP3 server are set correctly. |
| 016-506 | SMTP server is not configured. Tap `Close`, or wait for 60 seconds for the printer to recover. Make sure that SMTP server or POP server is set. |
| 016-507 | E-mail SMTP server login error. Tap `Close`, or wait for 60 seconds for the printer to recover. Make sure that user name and password used for SMTP server are set correctly. |
| 016-520 | The certificate of the printer is invalid. Contact your system administrator. Reset the certificate from other connectable clients with Dell™ Printer Configuration Web Tool. If no device can be connected, disconnect Ethernet cable, turn off the IPsec, and then reset the certificate with Dell Printer Configuration Web Tool. |
| 016-521 | The certificate of the destination client is invalid. Contact your system administrator. Check the certificate of the destination client and reset. |
| 016-530 | Authentication server access error. Turn off the printer, and then turn it on again. Check the access settings for the authentication server and try again. Contact customer support if this failure is repeated. |
| 016-541 | A wireless certificate of the server or client cannot be correctly referenced while using Wireless LAN WPA-Enterprise or WPA2-Enterprise. Ask your system administrator to connect the printer with a wired network, initialize the wireless settings, import the wireless certificate, and then set WPA-Enterprise or WPA2-Enterprise again. |
| 016-542 | A server certificate error has occurred when acquiring the certificate with the operation of WPA-Enterprise or WPA2-Enterprise. This is a problem in the server certificate, such as the validity period has expired for the server certificate being used with the Radius server. Ask your system administrator to check the server certificate being used with the Radius server. |
| 016-543 | A wireless certificate of the server or client corruption error has occurred while using the Wireless LAN WPA-Enterprise or WPA2-Enterprise. Ask your system administrator to connect the printer with a wired network, initialize the wireless settings, import the wireless certificate, and then set WPA-Enterprise or WPA2-Enterprise again. |
| 016-718 | Error relating to USB Direct Print problems has occurred. While the USB flash drive is still inserted, set `Image Types` to `Photos (Standard Quality)` in `Print Settings` under the `Print PDF/TIFF` menu and try printing again. See "Image Types." |
| 016-720 | Error relating to Page Description Language (PDL) emulation problems has occurred. Change the **Print Mode** setting in the **Graphics** tab of the print driver. Contact customer support if this failure is repeated. |
| 016-756 | Printing in the prohibited time. Contact your system administrator. |
| 016-757 | The account is not registered. Contact your system administrator. |
| 016-758 | The function cannot be used. Contact your system administrator. |
| 016-759 | Printable page limit is exceeded. Contact your system administrator. |
| 016-764 | An error occurs when the printer connected to the SMTP server. Tap `Close`, or wait for 60 seconds for the printer to recover. Check the SMTP server settings or contact the SMTP server administrator. |
| 016-765 | The capacity of the SMTP server is not enough. Tap `Close`, or wait for 60 seconds for the printer to recover. Contact the SMTP server administrator. |

| Status-Code | What you can do |
|---|---|
| 016-766 | The e-mail exceeds the SMTP server size restriction. Tap `Close`, or wait for 60 seconds for the printer to recover. Contact the SMTP server administrator. |
| 016-767 | The e-mail address of the recipient is incorrect. Tap `Close`, or wait for 60 seconds for the printer to recover. Check e-mail address, and then try scanning again. |
| 016-768 | The e-mail address of the sender is incorrect. Tap `Close`, or wait for 60 seconds for the printer to recover. Check e-mail address, and then try scanning again. |
| 016-786 | A timeout error occurs when sending or receiving scanned data. Tap `Close`, or wait for 60 seconds for the printer to recover. Check if the Ethernet cable is connected properly. If there is no problem with the Ethernet cable, contact server administrator. |
| 016-790 | Network connection error. IP address is not determined. Tap `Close`, or wait for 60 seconds for the printer to recover. Check if the Ethernet cable is connected properly. If there is no problem with the Ethernet cable, contact server administrator. |
| 016-799 | Tap `Close` to clear the message and cancel the current print job. Check the configuration of the printer on the print driver. |
| 016-930 | The device is not supported. Remove it from the front USB port. |
| 016-931 | The USB hub is not supported. Remove it from the front USB port. |
| 016-985 | Tap `Close`, or wait for 60 seconds for the printer to recover. Retry scanning by lowering the resolution setting or changing the file format of the scanned data. |
| 016-986 | |
| 024-965 | Make sure that the size and type specified in the tray settings matches the size and type of paper loaded in the tray. |
| 024-966 | |
| 024-969 | |
| 026-721 | Check your USB flash drive:<br>• If the file size or the number of files exceeds the limit of your USB flash drive.<br>• If your USB flash drive is not write-protected. |
| 027-446 | Change the IPv6 address to avoid duplication. Turn off the printer, and then turn it on again. |
| 027-452 | Change the IPv4 address to avoid duplication. Turn off the printer, and then turn it on again. |
| 031-521 | SMB server login error. Tap `Close`, or wait for 60 seconds for the printer to recover. Check login-able computer with your system administrator. |
| 031-522 | SMB server login error. Tap `Close`, or wait for 60 seconds for the printer to recover. Check if login name (domain name and user name) and password are correct. |
| 031-523 | Invalid SMB share name. Tap `Close`, or wait for 60 seconds for the printer to recover. Check the share name you specified. |
| 031-524 | Exceeded the SMB server user account limit. Tap `Close`, or wait for 60 seconds for the printer to recover. Check the number of users who use the server at the same time is not exceeding the upper limit. |
| 031-525 | SMB destination client permission error. Tap `Close`, or wait for 60 seconds for the printer to recover. Check if the specified user can read and write file at the storage location. |
| 031-526 | Unable to resolve the SMB server hostname. Tap `Close`, or wait for 60 seconds for the printer to recover. Check DNS connection, or check if forwarding destination server is registered with DNS. |

| Status-Code | What you can do |
|---|---|
| 031-527 | Unable to resolve the SMB server hostname. Tap `Close`, or wait for 60 seconds for the printer to recover. Set DNS address, or set forwarding destination server address as IP address. |
| 031-528 | Unable to connect to the SMB server. Tap `Close`, or wait for 60 seconds for the printer to recover. Check if the printer can communicate via network with the forwarding destination SMB server. For example, check the following:<br>• Connection of an Ethernet cable<br>• TCP/IP setting<br>• Communication with Port 137 (UDP), 138 (UDP), and 139 (TCP).<br>For communication beyond the subnet, contact your system administrator. |
| 031-529 | SMB server login error. Password is invalid. Tap `Close`, or wait for 60 seconds for the printer to recover. Check if password is correct. |
| 031-530 | The SMB share folder was not found on the specified SMB server. Tap `Close`, or wait for 60 seconds for the printer to recover. Check the following:<br>• Check if the storage location is correct.<br>• Check if the file name you specified can be used when creating a file on the SMB server.<br>• Have your system administrator check the DFS setting, and then directly specify the SMB server, share name, and storage location according to the checked settings. |
| 031-531 | Unable to get a file or folder name on the SMB server. Tap `Close`, or wait for 60 seconds for the printer to recover. Check access right of the folder you specified. |
| 031-532 | SMB scan file or folder name limit exceeded. Tap `Close`, or wait for 60 seconds for the printer to recover. Change file name and forwarding destination folder, or move or delete file in forwarding destination folder. |
| 031-533 | Unable to write a file in the SMB server. Tap `Close`, or wait for 60 seconds for the printer to recover. Check the following:<br>• If the file name you specified is not used by other users.<br>• If file or folder that has the same name as the one you specified already exists. |
| 031-534 | Unable to create a folder on the SMB server. Tap `Close`, or wait for 60 seconds for the printer to recover. Check the following:<br>• If the file name you specified is not used by other users.<br>• If file or folder that has the same name as the one you specified already exists. |
| 031-535 | Unable to delete a file on the SMB server. Tap `Close`, or wait for 60 seconds for the printer to recover. Check if other user is not operating file in storage location you specified. |
| 031-536 | Unable to delete a folder on the SMB server. Tap `Close`, or wait for 60 seconds for the printer to recover. Check if other user is not operating file in storage location you specified. |
| 031-537 | SMB server capacity exceeded. Tap `Close`, or wait for 60 seconds for the printer to recover. Check if the storage location has free space. |
| 031-539 | The specified SMB server is invalid. Tap `Close`, or wait for 60 seconds for the printer to recover. Check if the server name is correct. |
| 031-540 | The specified domain name is invalid. Tap `Close`, or wait for 60 seconds for the printer to recover. Check if the domain name is correct. |

| Status-Code | What you can do |
|---|---|
| 031-541 | Invalid user name specified for SMB server. Tap `Close`, or wait for 60 seconds for the printer to recover. Check if login name (user name) is correct. |
| 031-542 | TCP/IP not initialized. Tap `Close`, or wait for 60 seconds for the printer to recover. Wait for a while and try the same operation again. Contact the customer support if this failure is repeated. |
| 031-543 | SMB server login error. Tap `Close`, or wait for 60 seconds for the printer to recover. Check login permitted time with your system administrator. |
| 031-544 | SMB server login error. Password is expired. Tap `Close`, or wait for 60 seconds for the printer to recover. Check the password valid period with your system administrator. |
| 031-545 | SMB server login error. Password is to be changed. Tap `Close`, or wait for 60 seconds for the printer to recover. Check necessity of password change with your system administrator. |
| 031-546 | SMB server login error. Invalid user is specified. Tap `Close`, or wait for 60 seconds for the printer to recover. Contact your system administrator for the destination server settings. |
| 031-547 | SMB server login error. User restricted from accessing the SMB server is specified. Tap `Close`, or wait for 60 seconds for the printer to recover. Contact your system administrator for the destination server settings. |
| 031-548 | SMB server login error. Logon time of SMB destination is expired. Tap `Close`, or wait for 60 seconds for the printer to recover. Contact your system administrator for the destination server settings. |
| 031-549 | SMB server login error. Specified user is restricted, and a null password is prohibited. Tap `Close`, or wait for 60 seconds for the printer to recover. On server security settings, check access permission of null password user. |
| 031-550 | Append command not supported by SMB server. Tap `Close`, or wait for 60 seconds for the printer to recover. Check if the printer has access rights to append data to the SMB server. Check if server supports SMB append command. |
| 031-551 | Rename command not supported by SMB server. Tap `Close`, or wait for 60 seconds for the printer to recover. Check if the printer has access rights to rename data on the SMB server. Check if server supports SMB append command. |
| 031-552 | Job canceled. Tap `Close`, or wait for 60 seconds for the printer to recover. Change the file name that already exists on FTP server. |
| 031-574 | Unable to resolve the FTP server hostname. Tap `Close`, or wait for 60 seconds for the printer to recover. Check DNS connection, or check if name of forwarding destination server is registered with DNS. |
| 031-575 | Unable to resolve the FTP server hostname. Tap `Close`, or wait for 60 seconds for the printer to recover. Set DNS address, or set forwarding destination server address as IP address. |
| 031-576 | Unable to connect to the FTP server. Tap `Close`, or wait for 60 seconds for the printer to recover. Check if the printer communicates with forwarding destination FTP server. For example, check connection of Ethernet cable and if the IP address of the server is correct. |
| 031-578 | FTP server login error. Tap `Close`, or wait for 60 seconds for the printer to recover. Check if the login name (user name) and password are correct. |
| 031-579 | Invalid FTP subdirectory path. Tap `Close`, or wait for 60 seconds for the printer to recover. Check if the storage location is correct. |

| Status-Code | What you can do |
|---|---|
| 031-580 | Failed to obtain a file or folder name of the FTP server. Tap `Close`, or wait for 60 seconds for the printer to recover. Check the server access right. |
| 031-581 | FTP scan file or folder name limit exceeded. Tap `Close`, or wait for 60 seconds for the printer to recover. Change the file name and forwarding destination folder, or move or delete file in forwarding destination folder. |
| 031-582 | Unable to write a scan file to the FTP server location. Tap `Close`, or wait for 60 seconds for the printer to recover. Check if the file name you specified can be created in storage location. Check if the storage location has free space. |
| 031-584 | Unable to create a scan folder on the FTP server. Tap `Close`, or wait for 60 seconds for the printer to recover. Check if the folder name you specified can be created in storage location. Check if the folder that has the same name as the one you specified already exists. |
| 031-585 | Unable to delete a file on the FTP server. DEL command failure. Tap `Close`, or wait for 60 seconds for the printer to recover. Check server access rights. |
| 031-587 | Unable to delete a folder on the FTP server. RMD command failure. Tap `Close`, or wait for 60 seconds for the printer to recover. Check server access rights. |
| 031-588 | Unable to write a file to the FTP server location. Tap `Close`, or wait for 60 seconds for the printer to recover. Check if storage location has free space. |
| 031-590 | Job canceled. Tap `Close`, or wait for 60 seconds for the printer to recover. Change the file name that already exists on FTP server. |
| 031-594 | FTP transfer type error. TYPE command failure. Tap `Close`, or wait for 60 seconds for the printer to recover. Try the same operation again. Contact customer support if this failure is repeated. |
| 031-595 | FTP data port error. PORT command failure. Tap `Close`, or wait for 60 seconds for the printer to recover. Try the same operation again. Contact customer support if this failure is repeated. |
| 031-598 | FTP append data error. APPE command failure. Tap `Close`, or wait for 60 seconds for the printer to recover. Check if the printer has access rights to append data to the FTP server. Check if server supports FTP append command. |
| 031-599 | FTP rename file error. RNFR command failure. Tap `Close`, or wait for 60 seconds for the printer to recover. Check if the printer has access rights to rename data on the FTP server. Check if server supports FTP rename command. |
| 033-513 | Tap `Close`, or wait for 60 seconds for the printer to recover. Try the following:<br>• Print the received fax, or wait for a while until sending a fax is completed.<br>• Print the fax job stored using the Secure Receive feature.<br>See "Receiving Faxes in the Secure Receiving Mode." |
| 033-527 | Tap `Close`, or wait for 60 seconds for the printer to recover. Wait for a while until the printer is not busy, and then try again. |
| 033-528 | Tap `Close`, or wait for 60 seconds for the printer to recover. Check the available time period for the FAX, and then try again. |
| 033-762 | Tap `Close`, or wait for 60 seconds for the printer to recover. The printer rejects faxes sent from unwanted numbers. See "Junk Fax Setup." |

| Status-Code | What you can do |
|---|---|
| 033-776 | The size of the fax document data is too large and may have exceeded the space available in memory. Lower the scan resolution rate and then try scanning again. See "Resolution." |
| 033-788 | Tap `Close`, or wait for 60 seconds for the printer to recover. Try the following:<br>• Remove the received fax, or wait for a while until sending a fax is completed.<br>• Print the fax job stored using the Secure Receive feature.<br>See "Receiving Faxes in the Secure Receiving Mode." |
| 034-515 | Tap `Close`, or wait for 60 seconds for the printer to recover. Try the following:<br>• Try the same operation.<br>• Check the printer or remote machine if the memory is full. |
| 034-791 | Tap `Close`, or wait for 60 seconds for the printer to recover. Check if the telephone line cord is connected properly. If the line connection is correct, check the following:<br>• If Tone/Pulse setting is correct.<br>See "Tone / Pulse."<br>If Tone/Pulse setting is correct, check the following:<br>• If the remote machine can receive a fax. |
| 035-701 | Tap `Close`, or wait for 60 seconds for the printer to recover. Check the following:<br>• Status of the remote machine<br>• Tone/Pulse setting<br>See "Tone / Pulse." |
| 035-708 | Tap `Close`, or wait for 60 seconds for the printer to recover. Try the following:<br>• Try the same operation.<br>• Reduce the modem speed.<br>See "Modem Speed." |
| 035-717 | Tap `Close`, or wait for 60 seconds for the printer to recover. Reduce the modem speed. See "Modem Speed." |
| 035-718 | Tap `Close`, or wait for 60 seconds for the printer to recover. Check the status of the remote machine. |
| 035-720 | Tap `Close`, or wait for 60 seconds for the printer to recover. Check the features of the remote machine. |
| 035-781 | Tap `Close`, or wait for 60 seconds for the printer to recover. Check if the remote machine is busy. |
| 042-700 | Wait for a while until the printer cools down. Contact customer support if this failure is repeated. |
| 077-301 | Close the right side cover. |
| 077-302 | Close the rear cover. |
| 091-911 | Remove the used waste toner box, and then install a new toner box. See "Replacing the Waste Toner Box." |
| 091-914 | Reinsert the drum cartridge of the specified color. If the message remains, replace the cartridge. See "Replacing the Drum Cartridges." |
| 091-917 | |
| 091-918 | |
| 091-919 | |

| Status-Code | What you can do |
|---|---|
| 091-921 | Make sure that the drum cartridge of the specified color is fully installed. See "Replacing the Drum Cartridges." |
| 091-922 | |
| 091-923 | |
| 091-924 | |
| 091-931 | Remove the used drum cartridge of the specified color, and then install a new cartridge. See "Replacing the Drum Cartridges." |
| 091-932 | |
| 091-933 | |
| 091-934 | |
| 091-942 | Reinsert the drum cartridge of the specified color. If the message remains, replace the cartridge. See "Replacing the Drum Cartridges." |
| 091-943 | |
| 091-944 | |
| 091-945 | |
| 091-960 | Remove the unsupported drum cartridge of the specified color, and then install a supported drum cartridge. See "Replacing the Drum Cartridges." |
| 091-961 | |
| 091-962 | |
| 091-963 | |
| 093-930 | Remove the used toner cartridge of the specified color, and then install a new cartridge. See "Replacing the Drum Cartridges." |
| 093-931 | |
| 093-932 | |
| 093-933 | |
| 093-960 | Remove the unsupported toner cartridge of the specified color, and then install a supported toner cartridge. See "Replacing the Drum Cartridges." |
| 093-961 | |
| 093-962 | |
| 093-963 | |
| 093-970 | Make sure that the toner cartridge of the specified color is fully installed. See "Replacing the Drum Cartridges." |
| 093-971 | |
| 093-972 | |
| 093-973 | |
| 116-722 | Tap `Close` for the printer to recover. Check the Web Services on Devices (WSD) scan address and the destination computer, and then try scanning again. Contact your system administrator. |
| 193-700 | When genuine toner cartridges are installed, change the Non-Dell Toner setting to disable using the Dell Printer Configuration Web Tool. |

# Error Messages

| Message | Cause | Action |
|---|---|---|
| Cannot access the LDAP address book. Contact your network administrator if this error persists. | The printer fails to authenticate against an authentication server. | Check the server settings. If the error persists, contact your network administrator. |
| | An SSL authentication error on connection to the LDAP server; an SSL authentication internal error occurs. | If the error persists, contact your network administrator. |

| Message | Cause | Action |
|---|---|---|
| Cannot access the LDAP address book. The LDAPS server certificate is not correct. | An SSL authentication error on connection to the LDAP server; the server certificate data is incorrect. | Check the root certificate of the LDAP server SSL certificate on the printer. |
| Cannot access the LDAP address book. The LDAPS SSL client certificate is not set. | An SSL authentication error on connection to the LDAP server; the LDAP server cannot acquire an SSL client certificate. | Check that an SSL client certificate is correctly imported into the printer. |
| Cannot access the LDAP address book. The server names of LDAPS and the SSL certificate do not match. | An SSL authentication error on connection to the LDAP server; the server certificate for the LDAP server is not yet valid or has expired. | Change to a valid LDAP server SSL certificate. |
| | An SSL authentication error on connection to the LDAP server; the LDAP server name does not match the certificate. | Set the LDAP server address on the printer to match the address on the LDAP server SSL certificate. |
| Cannot access the LDAP address book. The time settings of the printer and the Kerberos server do not match. | The printer and the Kerberos server clocks have a time difference that exceeds the Kerberos server clock skew value. | Check that the printer and the Kerberos server clocks have the correct time. |
| Cannot connect to server. Check the server settings. | The specified server settings such as IP address and realm/domain name are incorrect. | Make sure that the correct IP address/host name, port number, realm/domain name, and search directory root are specified in **IP Address / Host Name & Port**, **Domain Name**, and **Search Directory Root** on the Dell Printer Configuration Web Tool. See "Kerberos Server" and "LDAP Server." |
| | The LDAP or Kerberos version on the server is not compatible with the printer. | Contact your network administrator. |
| | The server is down. | Check that the server is functioning normally. |
| Change the server settings and check the server connection. | The printer cannot search for destinations within the specified time. | Increase the time setting for **Search Time-Out** on the Dell Printer Configuration Web Tool. See "Authentication System" and "LDAP Server." |
| | | Check that the printer and the server are properly connected with an Ethernet cable. If there are not any problems with the connection and the error persists, the server settings may have been changed. Contact your network administrator. |
| Check the authentication settings. | The login name and password for access to an authentication server are incorrect. | Make sure that the correct login name and password are specified in **Login Name** and **Password** on the Dell Printer Configuration Web Tool. See "Kerberos Server" and "LDAP Server." |

| Message | Cause | Action |
|---|---|---|
| Invalid search characters or LDAP User Mapping incorrectly configured for Configuration Web Tool. | The LDAP search filter fails to work properly as special characters are used in your search condition or on the **LDAP User Mapping** page on the Dell Printer Configuration Web Tool. | Remove special characters, and then search again. See "LDAP User Mapping." |
| Network connection is not ready. Try again later. | You have started searching for destinations before the IP address is set for the printer. | Wait for a while, and then search again. |
| No attribute or invalid name. Check address info. on server. | The address information on the server contain incorrect data or are insufficient to get your search request. | Check the address information registered on the server or contact your network administrator. |
| No Entries. | The printer cannot find any destinations that meet your search condition. | Tap `OK` to return to the **Search Network Address Book** screen, and then specify a new condition to search again. |
| Search Directory Root incorrectly configured for Configuration Web Tool. | The directories that do not exist in the LDAP server are specified or an invalid DN syntax is specified. | Make sure that valid values are specified in **Search Directory Root** on the Dell Printer Configuration Web Tool. See "LDAP Server." Specify the origin of the search with the correct DN syntax, as shown in the following example:<br>dc=w2008ad,dc=addressbook,dc=net |
| Too many search results. Only a maximum of 50 search scan be displayed. Please refine your search if needed. | The number of search results has exceeded the maximum number the printer can display. | Tap `Close` to display the search results. If you cannot find your desired destination on the result list, specify a new condition to search again. |
| Authentication server access Error 016-530<br>Restart the printer. | Some other error occurs regarding the LDAP server address book. | Turn off the printer, and then turn it on again. If the error persists, contact your network administrator. |

# Specifications

## Operating System Compatibility

| | |
|---|---|
| **Supported Operating Systems** | Microsoft® Windows Vista® (32bit)<br>Microsoft® Windows Vista® (64bit)<br>Microsoft® Windows Server® 2008 (32bit)<br>Microsoft® Windows Server® 2008 (64bit)<br>Microsoft® Windows® 7 (32bit)<br>Microsoft® Windows® 7 (64bit)<br>Microsoft® Windows Server® 2008 R2<br>Microsoft® Windows® 8 (32bit)<br>Microsoft® Windows® 8 (64bit)<br>Microsoft® Windows® RT<br>Microsoft® Windows Server® 2012<br>Microsoft® Windows® 8.1 (32bit)<br>Microsoft® Windows® 8.1 (64bit)<br>Microsoft® Windows® RT 8.1<br>Microsoft® Windows Server® 2012 R2<br>Microsoft® Windows® 10 (32 bit)<br>Microsoft® Windows® 10 (64 bit)<br>Mac OS X 10.7<br>OS X 10.8<br>OS X 10.9<br>OS X 10.10<br>Red Hat Enterprise<br>Linux® 6 Desktop (64bit)<br>Red Hat Enterprise Linux 6 Desktop (32bit)<br>SUSE® Linux Enterprise Desktop 11 (64bit)<br>SUSE® Linux Enterprise Desktop 11 (32bit)<br>Ubuntu 12.04 LTS |

## Power Supply

| | | |
|---|---|---|
| **Rated voltage** | 220 – 240 VAC | 110 – 127 VAC |
| **Frequency** | 50/60 Hz | 50/60 Hz |
| **Current** | 6 A or less | 12 A or less |
| **Power consumption** | 67.0 W (Ready)<br>15.0 W (Sleep)<br>1.0 W (Deep Sleep)<br>0 W (Offline) | 67.0 W (Ready)<br>15.0 W (Sleep)<br>1.0 W (Deep Sleep)<br>0 W (Offline) |

## Dimensions

| | |
|---|---|
| **Height** | 500 mm (19.69 inches) |

| | |
|---|---|
| **Width** | 420 mm (16.54 inches) |
| **Depth** | 499 mm (19.65 inches) |

# Weight

| | |
|---|---|
| **Weight** | 30.7 kg (67.68 lb)* |

* includes toner cartridges and drum cartridges.

# Memory

| | |
|---|---|
| **Memory** | 1 GB |
| **Speed** | DDR3-1066MHz |

# Page Description Language (PDL)/Emulation, Operating System, and Interface

| | |
|---|---|
| **PDL/Emulations** | PCL 6, PCL5e, PostScript Level3 Compatible, HBPL |
| **Operating systems** | Microsoft® Windows Vista® (32bit)<br>Microsoft® Windows Vista® (64bit)<br>Microsoft® Windows Server® 2008 (32bit)<br>Microsoft® Windows Server® 2008 (64bit)<br>Microsoft® Windows® 7 (32bit)<br>Microsoft® Windows® 7 (64bit)<br>Microsoft® Windows Server® 2008 R2<br>Microsoft® Windows® 8 (32bit)<br>Microsoft® Windows® 8 (64bit)<br>Microsoft® Windows Server® 2012<br>Microsoft® Windows® 8.1 (32bit)<br>Microsoft® Windows® 8.1 (64bit)<br>Microsoft® Windows Server® 2012 R2<br>Microsoft® Windows® 10 (32 bit)<br>Microsoft® Windows® 10 (64 bit)<br>Mac OS X 10.7<br>OS X 10.8<br>OS X 10.9<br>OS X 10.10<br>Red Hat Enterprise<br>Linux® 6 Desktop (64bit)<br>Red Hat Enterprise Linux 6 Desktop (32bit)<br>SUSE® Linux Enterprise Desktop 11 (64bit)<br>SUSE® Linux Enterprise Desktop 11 (32bit)<br>Ubuntu 12.04 LTS |
| **Interfaces** | Standard local: USB 2.0<br>Standard wired network: 10Base-T/100Base-TX/1000Base-T Ethernet<br>Standard wireless network*: IEEE 802.11b/802.11g/802.11n |

* Wireless network is available on Dell H625cdw and Dell H825cdw.

## Management Information Base (MIB) Compatibility

MIB is a database containing information about network devices such as adapters, bridges, routers, or computers. This information helps network administrators manage the network and analyze performance, traffic, errors, and so on. Your printer complies with standard industry MIB specifications, allowing the printer to be recognized and managed by various printer and network management software systems.

# Environment

## Operation

| | |
|---|---|
| **Temperature** | 10 – 32°C (50 – 89.6°F) |
| **Relative humidity** | 10 – 85% RH (no condensation) |

## Print Quality Guarantee

| | |
|---|---|
| **Temperature** | 15 – 28°C (59 – 82.4°F) |
| **Relative humidity** | 20 – 70% RH (no condensation) |

## Storage

| | |
|---|---|
| **Temperature** | -20 – 40°C (0 – 104°F) |
| **Storage humidity** | 5 – 85% RH (no condensation) |

## Altitude

| | |
|---|---|
| **Operating** | Up to 3,100 m (10,170 feet) |
| **Storage** | Up to 3,100 m (10,170 feet) |

# Cables

Your interconnection cable must meet the following requirements:

| | | |
|---|---|---|
| **Ethernet** | 10Base-T/100Base-TX/1000Base-T | |
| **USB** | USB 2.0 | |
| **Phone connector** | RJ11 | PHONE |
| **Wall jack connector** | RJ45 | LINE |

# Print Specifications

| | |
|---|---|
| **Print resolution** | 600 × 600 dpi |

| | |
|---|---|
| **Print speed** | Simplex:<br>24 ppm (A4), 25ppm (Letter)<br>(Dell H625cdw)<br>29 ppm (A4), 30 ppm (Letter)<br>(Dell H825cdw/Dell S2825cdn)<br>Duplex:<br>18 ppm (A4), 17 ppm (Letter)<br>(Dell H625cdw)<br>19 ppm (A4), 20 ppm (Letter)<br>(Dell H825cdw/Dell S2825cdn) |
| **Paper size** | A4, B5, A5, B6, A6, Letter, Executive, Folio (8.5 x 13"), Legal, Statement, Envelope #10, Monarch, DL, C5, Custom* |

* Width:
76.2 mm (3 inches) to 215.9 mm (8.5 inches)
Length:
127 mm (5 inches) to 355.6 mm (14 inches) for MPF
148 mm (5.8 inches) to 355.6 mm (14 inches) for Tray1
190.5 mm (7.5 inches) to 355.6 mm (14 inches) for the optional 550-sheet feeder

# Copy Specifications

| | |
|---|---|
| **Copy resolution** | Optical: 600 × 600 dpi |

| | |
|---|---|
| **Copy speed** | When using the document glass to make sequential copies of a document with pages scanned one by one<br>Simplex (Dell H625cdw):<br>Color 14 cpm (A4)/25 cpm (Letter) or more<br>Black & White 24 cpm (A4)/25 cpm (Letter) or more<br><br>Simplex (Dell H825cdw/Dell S2825cdn):<br>Color 14 cpm (A4)/30 cpm (Letter) or more<br>Black & White 29 cpm (A4)/30 cpm (Letter) or more<br><br>Duplex (Dell H625cdw):<br>Color 14 cpm (A4)/17 cpm (Letter) or more<br>Black & White 24 cpm (A4)/17 cpm (Letter) or more<br><br>Duplex (Dell H825cdw/Dell S2825cdn):<br>Color 14 cpm (A4)/20 cpm (Letter) or more<br>Black & White 29 cpm (A4)/20 cpm (Letter) or more<br><br>When using the Duplex Automatic Document Feeder (DADF) to make sequential copies of multiple documents<br>Simplex (Dell H625cdw):<br>Color 14 cpm (A4)/15 cpm (Letter) or more (400 dpi),<br>Black & White 24 cpm (A4)/25 cpm (Letter) or more (400 dpi)<br>Color 14 cpm (A4)/10 cpm (Letter) or more (600 dpi)<br>Black & White 24 cpm (A4)/24 cpm (Letter) or more (600 dpi)<br><br>Simplex (Dell H825cdw/Dell S2825cdn):<br>Color 14 cpm (A4)/15 cpm (Letter) or more (400 dpi)<br>Black & White 29 cpm (A4)/30 cpm (Letter) or more (400 dpi)<br>Color 14 cpm (A4)/10 cpm (Letter) or more (600 dpi)<br>Black & White 29 cpm (A4)/24 cpm (Letter) or more (600 dpi)<br><br>Duplex (Dell H625cdw):<br>Color 14 cpm (A4)/12 cpm (Letter) or more (400 dpi)<br>Black & White 24 cpm (A4)/25 cpm (Letter) or more (400 dpi)<br>Color 14 cpm (A4)/9 cpm (Letter) or more (600 dpi)<br>Black & White 24 cpm (A4)/18 cpm (Letter) or more (600 dpi)<br><br>Duplex (Dell H825cdw/Dell S2825cdn):<br>Color 14 cpm (A4)/12 cpm (Letter) or more (400 dpi)<br>Black & White 29 cpm (A4)/25 cpm (Letter) or more (400 dpi)<br>Color 14 cpm (A4)/9 cpm (Letter) or more (600 dpi)<br>Black & White 29 cpm (A4)/18 cpm (Letter) or more (600 dpi) |
| **Paper Size** | A4, B5, A5, B6, A6, Letter, Executive, Folio (8.5 x 13"), Legal, Statement, Envelope #10, Monarch, DL, C5, Custom* |
| **Zoom rate** | Document glass: 25 – 400%<br>DADF: 25 – 400% |
| **Multiple copies** | 1 – 99 |
| **Copy mode (=Original type)** | Text, Text & Photo, Photo |
| **Scanning method** | Document glass: Document-fixed flatbed scanning<br>DADF: Carriage-fixed, document-feeding scanning (2-side scanning) |

* Width:
76.2 mm (3 inches) to 215.9 mm (8.5 inches)
Length:
127 mm (5 inches) to 355.6 mm (14 inches) for MPF

148 mm (5.8 inches) to 355.6 mm (14 inches) for Tray1
190.5 mm (7.5 inches) to 355.6 mm (14 inches) for the optional 550-sheet feeder

# Scanner Specifications

| | |
|---|---|
| **Compatibility** | TWAIN, TWAIN-Net, Windows® Image Acquisition (WIA)[*1], Scan Service for Web Services on Devices (WSD)[*2] |
| **Scan resolution** | Optical: 600 × 400 dpi, 600 × 600 dpi<br>Enhanced (Pull Scan):<br>• TWAIN – 50 × 50 to 9,600 × 9,600 dots/25.4 mm<br>• WIA[*3] – 75/100/150/200/300/400/600 dots/25.4 mm<br>Enhanced (Push Scan): 200/300 (Default)/400/600 dots/25.4 mm |
| **Color bit depth** | 24 bit |
| **Mono bit depth** | 1 bit for Line art<br>8 bit for Gray scale |
| **Effective scanning length** | Document glass: 297 mm<br>DADF: 355.6 mm |
| **Effective scanning width** | 215.9 mm |
| **Scan speed (Text mode)** | Simplex:<br>Color 605 µS/line (600 dpi)<br>Black & White 282 µS/line (600 dpi)<br>Duplex:<br>Color 1210 µS/line (600 dpi)<br>Black & White 564 µS/line (600 dpi) |

*1 Windows® operating system only
*2 Windows Vista®, Windows® 7, Windows® 8, and Windows® 10 only
*3 WIA stands for Windows® Image Acquisition.

# Fax Specifications

| | |
|---|---|
| **Compatibility** | ITU-T T.30 |
| **Applicable line** | Public Switched Telephone Network (PSTN), Private Branch Exchange (PBX), Leased line (3.4 KHz/2-wire) |
| **Data coding** | 1bit/JBIG/MMR/MR/MH |
| **Max modem speed** | 33.6 Kbps |
| **Transmission speed** | Approx. 3 seconds/page* |
| **Scanning speed** | Document glass: approx. 3 seconds/A4 (at standard fax resolution mode)<br>DADF: approx. 5 seconds/Letter (at standard fax resolution mode), 7.5 seconds/Letter (at fine fax resolution mode) |
| **Maximum document length** | Document glass: 297 mm<br>DADF: 355.6 mm |
| **Paper size** | Letter, A4 (depending on a country) |
| **Resolution** | Standard: R8 × 3.85 l/mm<br>Fine: R8 × 7.7 l/mm<br>Super Fine: 400 × 400 dpi<br>Photo: R8 × 7.7 l/mm |
| **User memory** | 4 MB |
| **Halftone** | 256 levels |

* Transmission time applies to memory transmission of text data scanned in Standard resolution with the Error Correction Mode (ECM) using only ITU-T No.1 Chart.

# Wireless Connection Specifications

**NOTE:**

- Wireless connection is available on Dell H625cdw and Dell H825cdw.

| | |
|---|---|
| **Connectivity technology** | Wireless |
| **Compliant standards** | IEEE 802.11b, 802.11g, and 802.11n |
| **Bandwidth** | 2.4 GHz |
| **Data transfer rate** | IEEE 802.11n: 65 Mbps<br>IEEE 802.11g: 54, 48, 36, 24, 18, 12, 9, and 6 Mbps<br>IEEE 802.11b: 11, 5.5, 2, and 1 Mbps |
| **Security** | 64 (40-bit key)/128 (104-bit key) WEP, WPA-PSK (AES), WPA2-PSK (AES), WPA-Enterprise (AES)*1, WPA2-Enterprise (AES)*1 |
| **Wi-Fi Protected Setup (WPS)*2** | Push-Button Configuration (PBC),<br>Personal Identification Number (PIN) |
| **Wireless mode** | Infrastructure, Ad-hoc, Wi-Fi Direct |

*1 EAP method supports PEAPv0, EAP-TLS, EAP-TTLS PAP, and EAP-TTLS CHAP.

*2 WPS 2.0 compliant.

6

# Maintaining Your Printer

Maintaining Your Printer 325

# Maintaining Your Printer

You need to complete certain tasks to maintain optimum print quality.

## Checking the Status of Supplies

If the printer is connected to the network, the Dell™ Printer Configuration Web Tool can provide instant feedback on remaining toner levels. Enter the printer's IP address in your web browser to view this information. You can also set the printer to send you an e-mail alert when the printer needs supplies.

On the touch panel, you can also check the following:

- Any supply or maintenance items that require attention replacing (However, the printer can only display information about one item at a time).
- Amount of toner remaining in each toner cartridge.

### E-mail Alert Setting

1. Start the Dell Printer Configuration Web Tool.
   See "Starting the Dell Printer Configuration Web Tool."
2. Click **Print Server Settings** link.
3. Under **E-Mail Server Settings**, enter the **Primary SMTP Gateway**, **Reply Address**.
4. Under **E-Mail Alert Settings**, enter your e-mail address or an e-mail address of a key operator.
5. Click **Apply New Settings**.

   **NOTE:**
   - **Connection pending until printer sends an alert** is displayed on the SMTP server until an error occurs.

## Conserving Supplies

You can change several settings in the print driver to conserve toner cartridge and paper.

| Supply | Setting | Function |
|---|---|---|
| Toner cartridge | **Toner Saver** in the **Others** tab | Select the check box to enable the print mode that uses less toner. The image quality is lower when this feature is used. |
| Print media | **Multiple Up** in the **Layout** tab | The printer prints two or more pages on one side of a sheet. |
| Print media | **Duplex** in the **General** tab | The printer prints on both sides of a sheet of paper. |

## Ordering Supplies

You can order toner cartridges, drum cartridges, and waste toner box online or by phone from Dell.

### Using Dell Printer Configuration Web Tool

1. Start the Dell Printer Configuration Web Tool.
   See "Starting the Dell Printer Configuration Web Tool."

2 Click the **Order Supplies at:**.

## Using the Dell Supplies Management System

**NOTE:**

- For OS X, you can order consumables from the Status Monitor Widget. See "Using the Status Monitor Widget for Macintosh."
- For Linux, you can order consumables from the Status Monitor Console. See "Using the Status Monitor Console for Linux."

For Windows®:

The following procedure uses Windows® 7/Windows® 10 as an example.

1 Click **Start** → **All Programs** → **Dell Printers** → **Dell Printer Hub** or **Dell Print Management Tool**.

   For Windows® 10: Click the Start button → **Dell Printer Hub** or **Dell Print Management Tool**.

2 Select the printer from the **Select Printer Model** list.

3 Order consumables either from the web or phone.

   If ordering from the web:

   a Select a URL from the **Select Reorder URL** list.

   b Click **Visit Dell printer supplies ordering web site**.

   **NOTE:**

   - When you cannot get information from the printer by two-way communication, a window that prompts you to enter the Service Tag appears. Type your Dell printer Service Tag in the field provided. See "Express Service Code and Service Tag."

   If ordering by phone:

   Call the number that appears under the **Order by Phone** heading.

   To ensure that you get the best service, have your Dell printer's Service Tag ready.

   See "Express Service Code and Service Tag."

# Storing Print Media

To avoid potential paper feeding problems and uneven print quality, there are several things you can do when storing print media:

- To achieve the best possible print quality, store print media in an environment where the temperature is approximately 21°C (70°F) and the relative humidity is 40 %.
- Store cartons of print media on a pallet or shelf, rather than directly on the floor.
- If you store individual packages of print media out of the original carton, make sure that they rest on a flat surface so the edges do not buckle or curl.
- Do not place anything on top of the print media packages.

# Storing Consumables

Store consumables in their original package until you need to use them. Do not store consumables in:

- Temperatures greater than 40°C (104°F)
- An environment with extreme changes in humidity or temperature

- Direct sunlight
- Dusty places
- A car for a long period of time
- An environment where corrosive gases are present
- A humid environment

# Replacing the Toner Cartridges

**WARNING:**

- **Before replacing the toner cartridges, read and follow the safety instructions in the *Important Information*.**

Dell toner cartridges are available only through Dell. You can order cartridges online at **www.dell.com/supplies** or by phone. For details about how to order cartridges by phone, see "Contacting Dell."

It is recommended to use Dell toner cartridges for the printer. Dell does not provide warranty coverage for problems caused by using accessories, parts, or components not supplied by Dell.

**WARNING:**

- **Never throw a toner cartridge into an open flame. Remaining toner in the cartridge may catch fire or explode, causing burns and injuries.**

**CAUTION:**

- **Do not shake the used toner cartridge. Shaking the cartridge may cause the toner to spill out.**

## Removing the Toner Cartridge

**NOTE:**

- Make sure to remove all the paper from the Multipurpose Feeder (MPF) and close the MPF cover before removing the toner cartridge.

1 Grasp the grips on both sides of the front cover, and then pull it down to open.

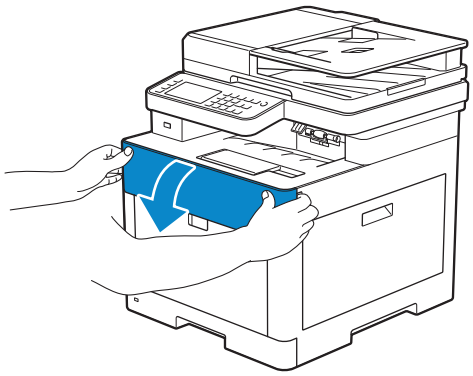

2 Grasp the handle on the toner cartridge that you want to replace, and then pull it out.

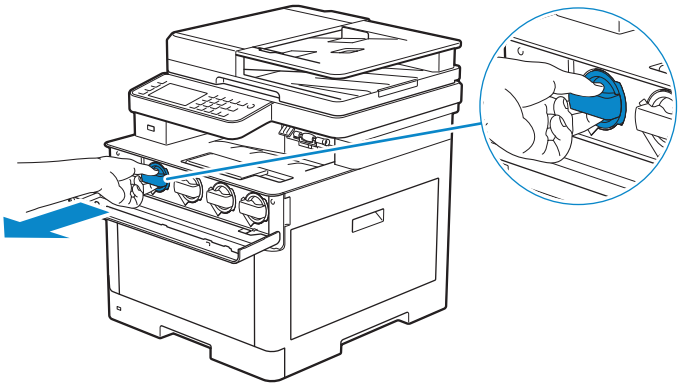

**CAUTION:**

- **Do not shake the used toner cartridge. Shaking the cartridge may cause the toner to spill out.**

## Installing a Toner Cartridge

1 Unpack a new toner cartridge of the desired color.

2 Shake the new toner cartridge six times to distribute the toner evenly.

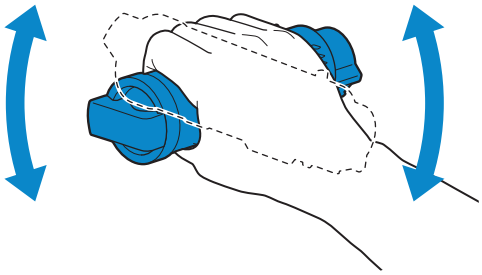

3 Align the toner cartridge to the notches on the associated cartridge slot, and then insert the toner cartridge.

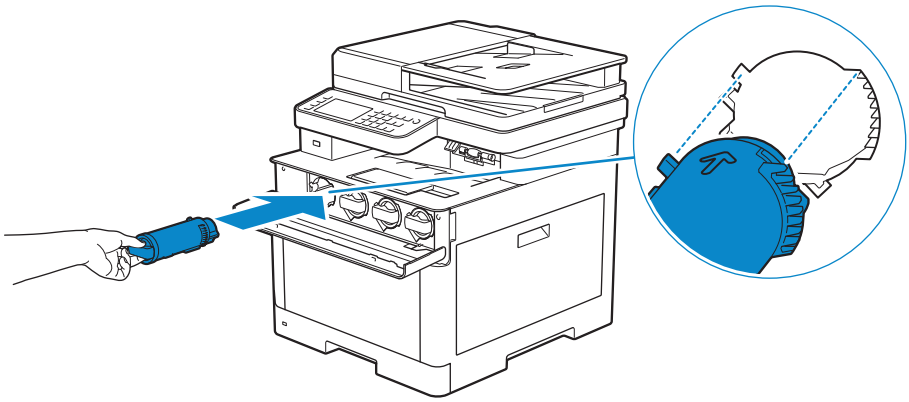

4 Push the toner cartridge all the way in until you feel a click.

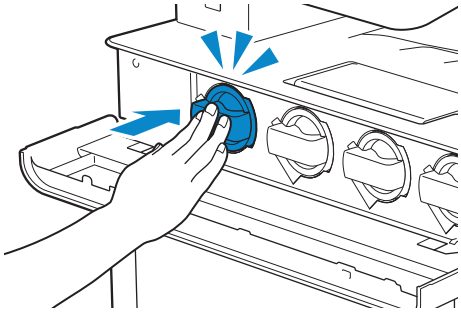

5 Close the front cover.

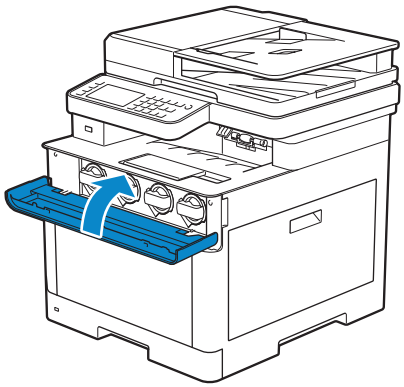

# Replacing the Drum Cartridges

You need to replace all drum cartridges (yellow, magenta, cyan, and black) at a time.

**WARNING:**

- **Before replacing the drum cartridges, read and follow the safety instructions in the *Important Information*.**

**CAUTION:**

- **Protect the drum cartridges against bright light. If the right side cover remains open for more than 3 minutes, print quality may deteriorate.**

## Removing the Drum Cartridge

1 Open the right side cover.

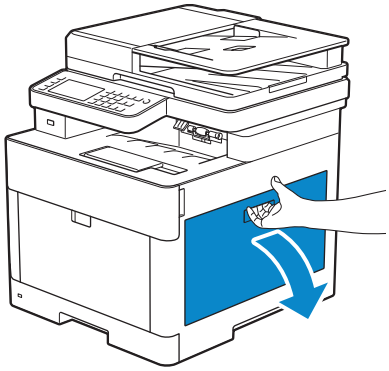

2 Push down the latch to release the waste toner box from the printer.

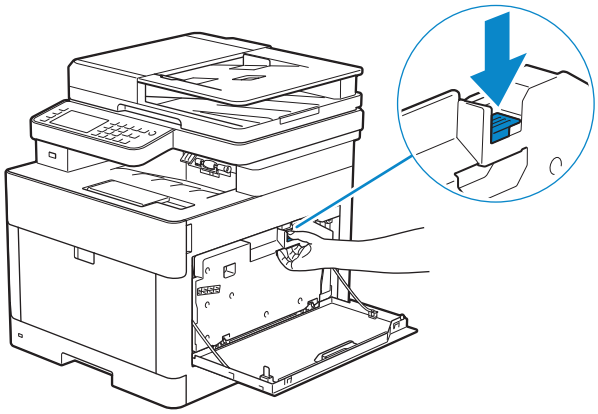

3 Gently pull the waste toner box upwards.

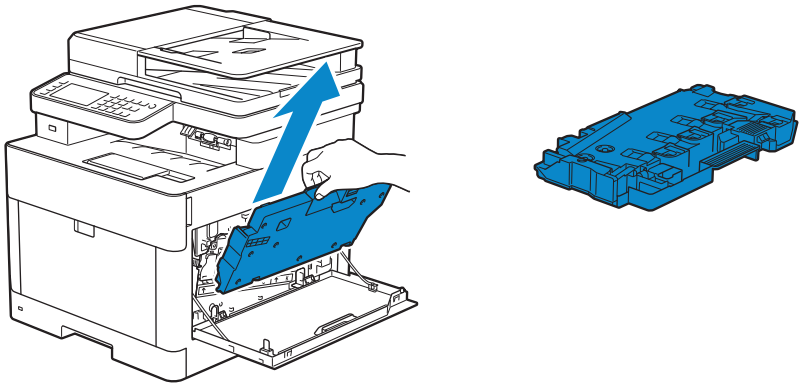

**CAUTION:**

- **Take care not to drop the waste toner box while you are removing it.**
- **After removing the waste toner box, do not touch the parts shown in the illustration. Your hands may get dirty or stained with toner.**

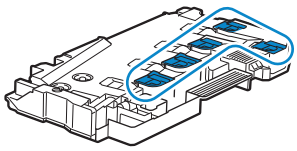

4 Place the waste toner box on a level surface.

Always keep the side that was attached to the printer facing up.

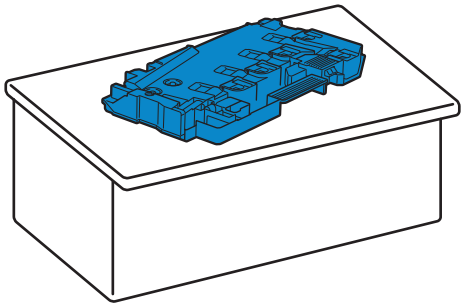

**CAUTION:**

- **Never let the side that was attached to the printer face down. This may cause the toner to spill out.**

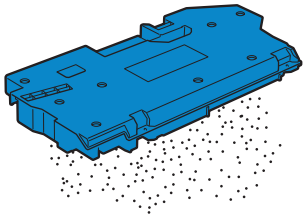

5 Pull down the tab on the drum cartridge that you want to replace.

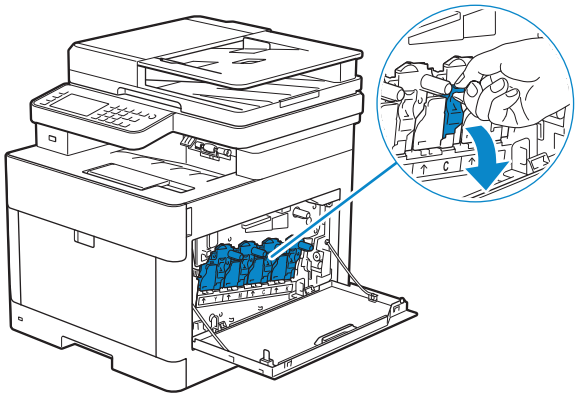

6 Pull the drum cartridge halfway out by pulling the tab, and then support the drum cartridge from underneath with your other hand and pull it out completely.

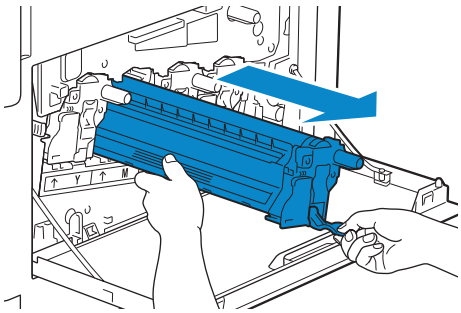

7 Repeat the steps 5 and 6 and remove the other three cartridges.

## Installing a Drum Cartridge

1 Unpack a new drum cartridge of the desired color.

2 Remove the orange protective cover from the drum cartridge.

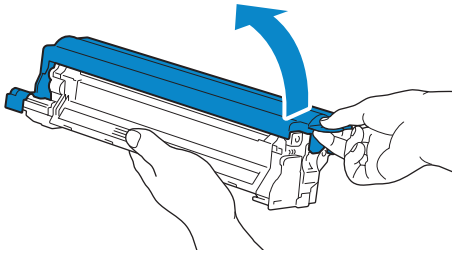

3 Insert the drum cartridge into the associated cartridge slot, and then push until it stops.

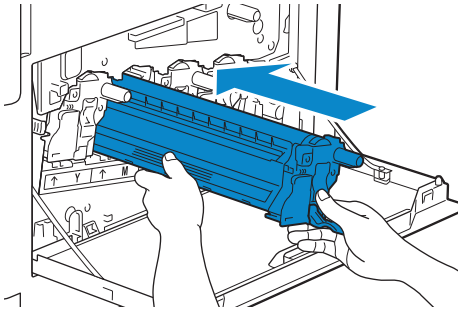

4 Pull up the tab on the drum cartridge.

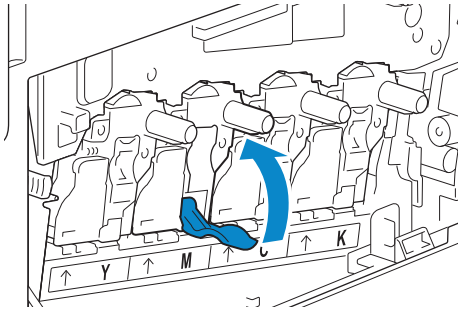


5 Repeat the steps 1 to 4 to insert the other three cartridges.

6 Pull out the cleaning rod from inside the printer.

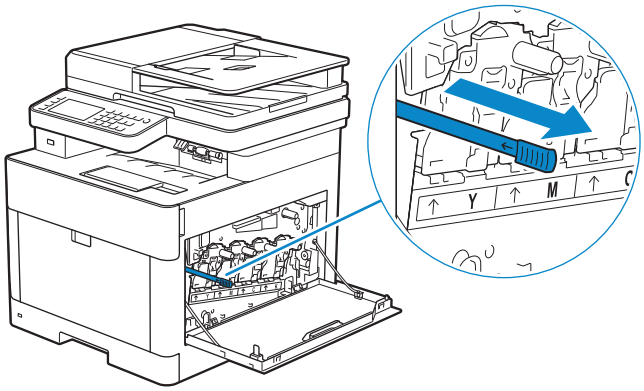


7 Insert the cleaning rod into one of the four holes of the tabs on the drum cartridges until it stops, and then pull it out.

**NOTE:**

- It is not necessary to move the cleaning rod back and forth repeatedly.

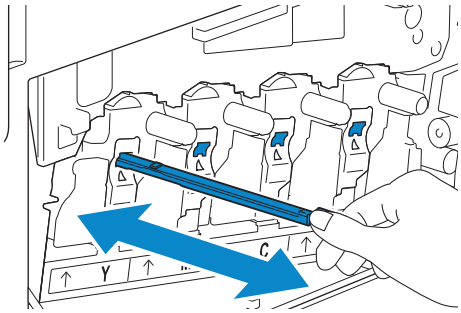


8 Repeat step 7 for the other three holes.

9 Return the cleaning rod to its original location.

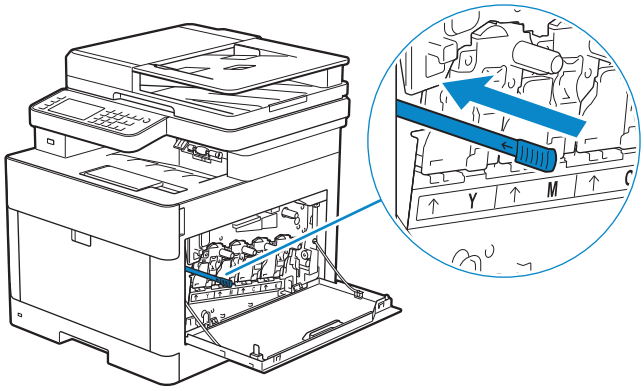


10 Reinsert the waste toner box.

Make sure that the two indented parts on the bottom go into the brackets on the printer.

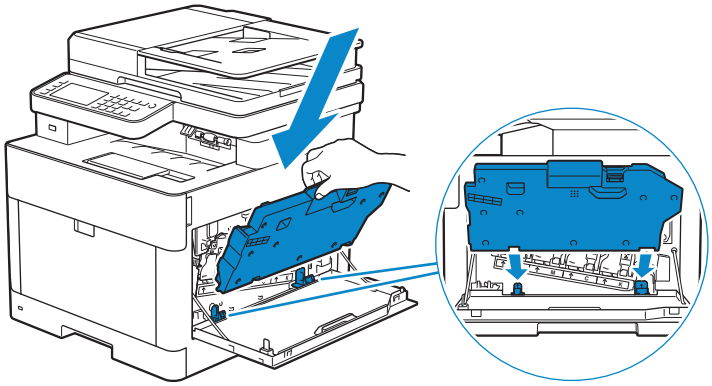

11 Push on the handle of the waste toner box until it clicks.

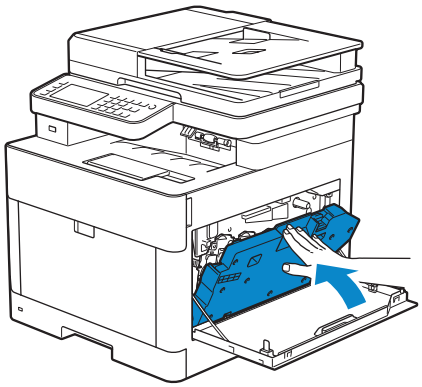

12 Close the right side cover.

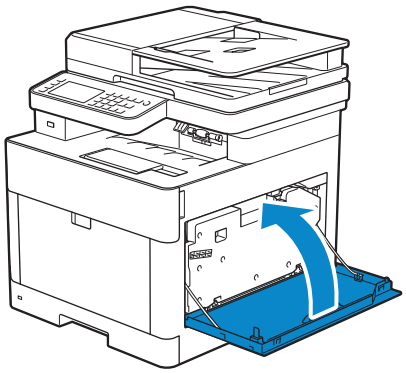

# Replacing the Waste Toner Box

**WARNING:**

- **Before replacing the waste toner box, read and follow the safety instructions in the *Important Information*.**

## Removing the Waste Toner Box

1 Open the right side cover.

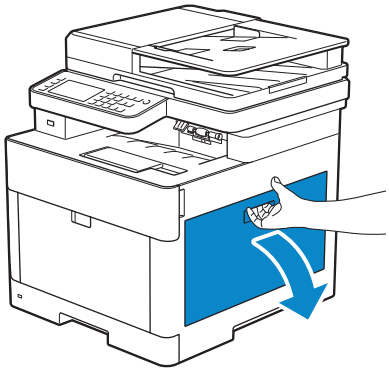

2 Push down the latch to release the waste toner box from the printer.

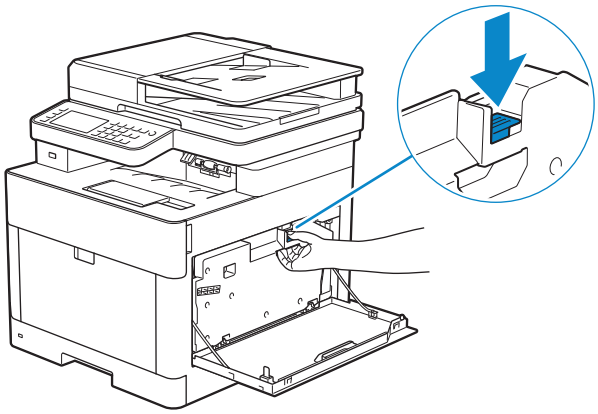

3 Gently pull the waste toner box upwards.

Make sure that the side that was attached to the printer is facing up so that the waste toner does not spill out.

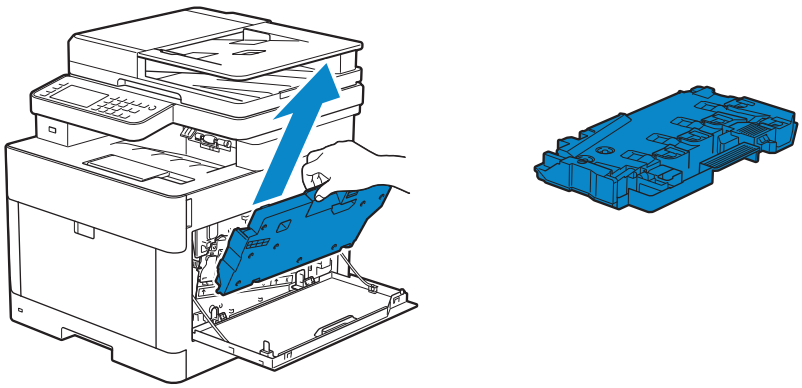

**CAUTION:**

- **Take care not to drop the waste toner box while you are removing it.**
- **After removing the waste toner box, do not touch the parts shown in the illustration. Toner can soil or stain your hands.**

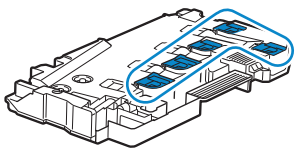

4 Insert the used waste toner box into the plastic bag that came with the new waste toner box and seal the bag.

## Installing a Waste Toner Box

1 Unpack a new waste toner box.

2 Insert the waste toner box.

Make sure that the two indented parts on the bottom go into the brackets on the printer.

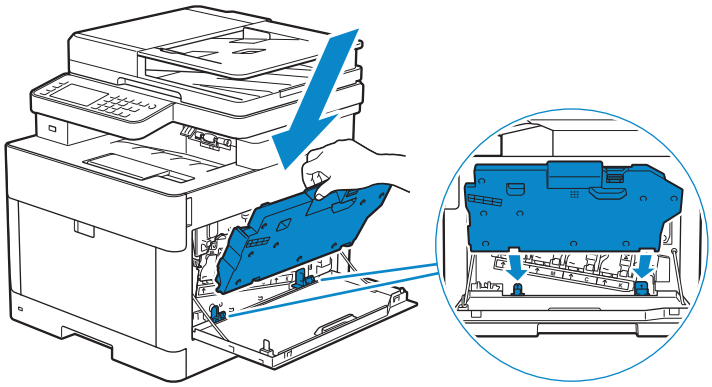

3 Push on the handle of the waste toner box until it clicks.

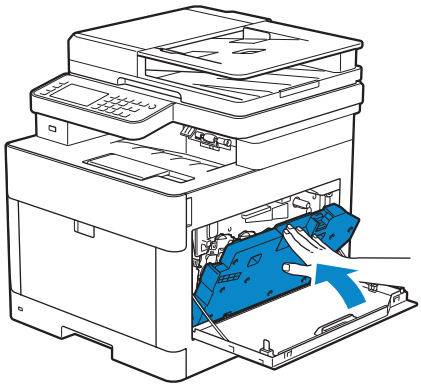

4 Close the right side cover.

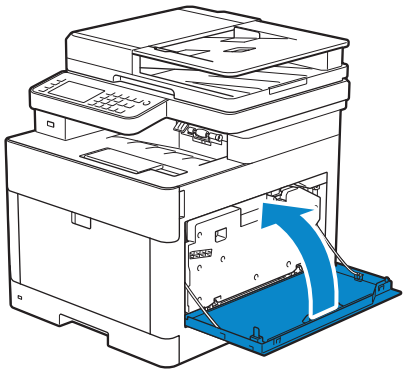

# Cleaning Inside the Printer

## Cleaning the Color Toner Density (CTD) Sensor

**NOTE:**

- Clean the CTD sensor only when an alert for the CTD sensor is shown on the Status Monitor or touch panel.

1 Make sure that the printer is turned off.

2 Pull up the handle lever of the rear cover, and open the rear cover.

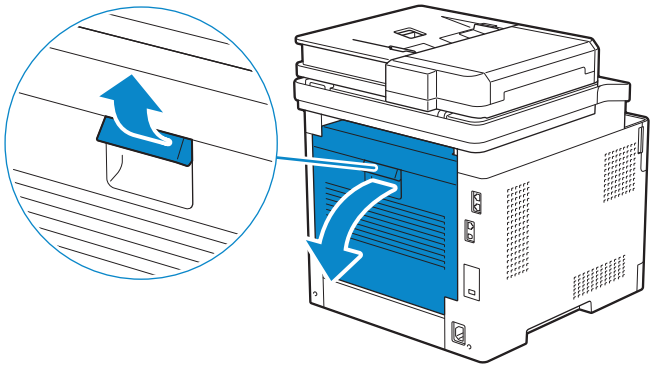

3 Clean the CTD sensor with a clean and dry cotton swab.

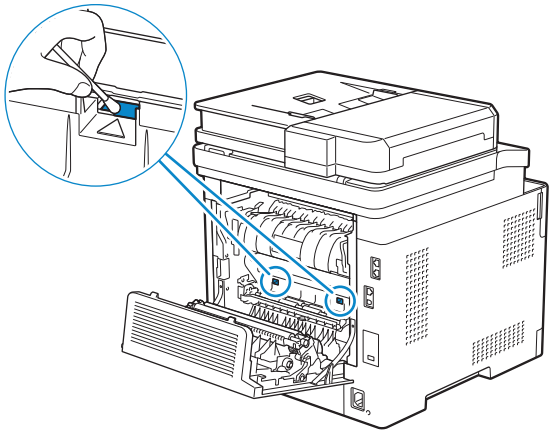

4 Close the rear cover.

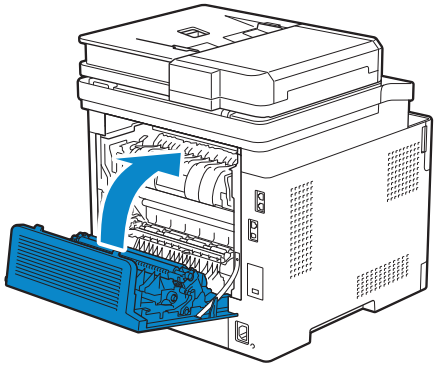

## Cleaning the LED Print Head

To prevent deterioration of printing quality due to stains on the LED print head, clean the LED print head regularly by using the cleaning rod or whenever you replace the drum cartridges.

1 Open the right side cover.

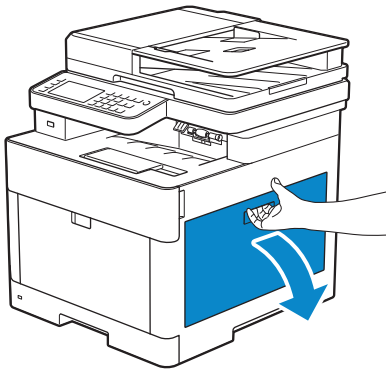

2 Push down the latch to release the waste toner box from the printer.

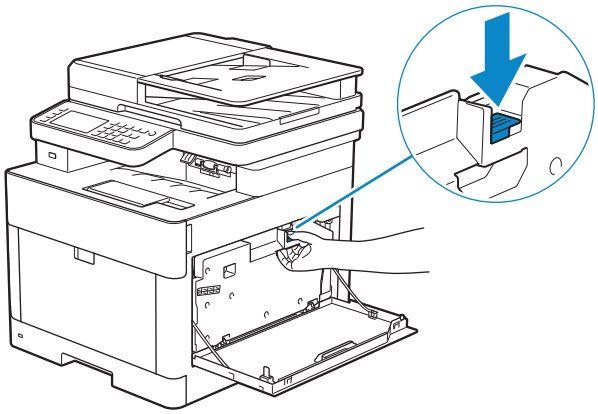

3 Gently pull the waste toner box upwards.

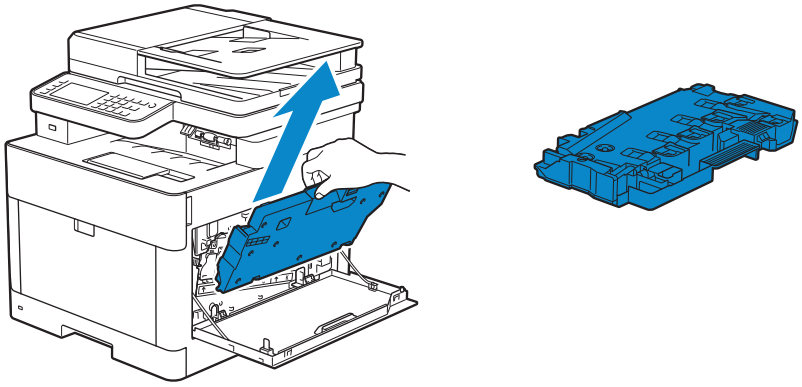

**CAUTION:**

- **Take care not to drop the waste toner box while you are removing it.**
- **After removing the waste toner box, do not touch the parts shown in the illustration. Toner can dirty or stain your hands.**

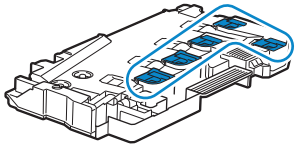

4 Place the waste toner box on a level surface.

Always keep the side that was attached to the printer facing up.

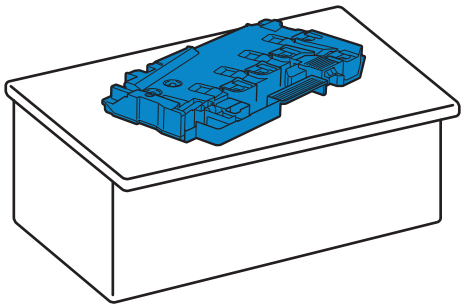

**WARNING:**

- **Never let the side that was attached to the printer face down. This may cause the toner to spill out.**

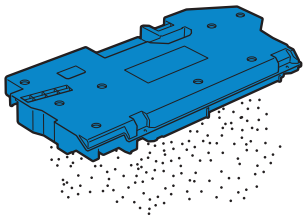

5 Pull out the cleaning rod from inside the printer.

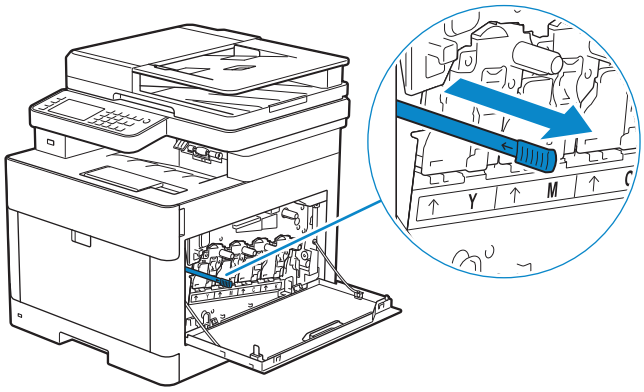


6 Insert the cleaning rod into one of the four holes of the tabs on the drum cartridges until it stops, and then pull it out.

**NOTE:**

- Insert the cleaning rod with the pad side up.
- It is not necessary to move the cleaning rod back and forth repeatedly.

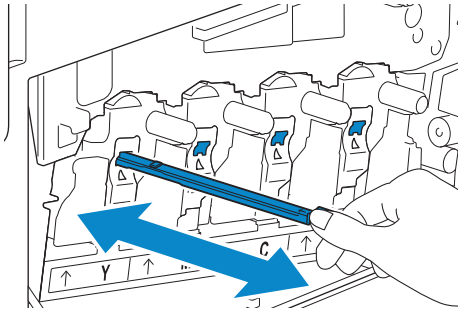


7 Repeat step 6 for the other three holes.

8 Return the cleaning rod to its original location.

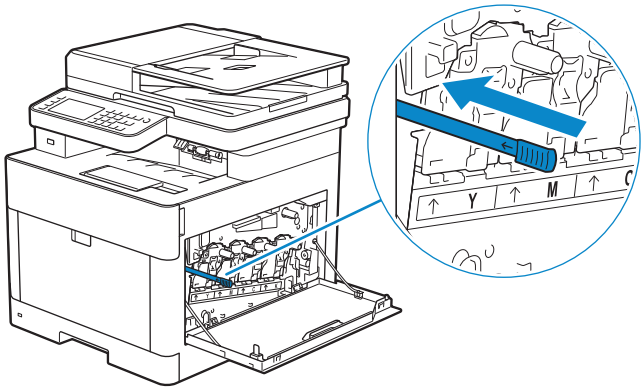


9 Insert the waste toner box.

Make sure that the two indented parts on the bottom go into the brackets on the printer.

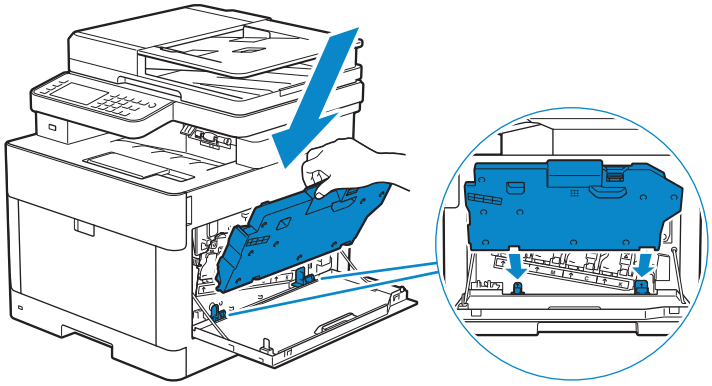

10 Push on the handle of the waste toner box until it clicks.

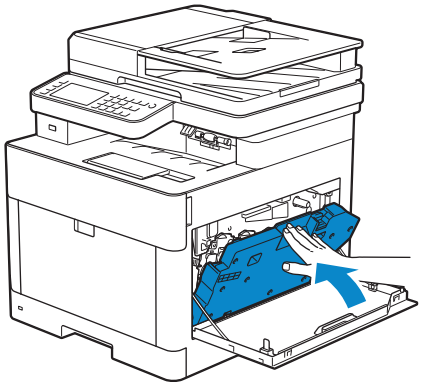

11 Close the right side cover.

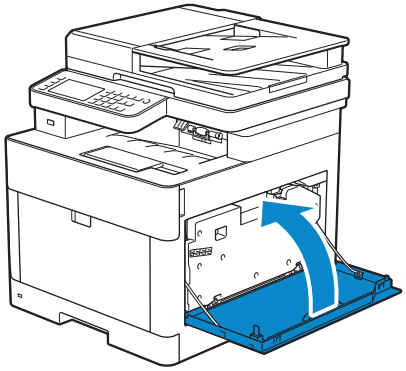

## Cleaning the Scanner

Keeping the scanner clean helps ensure the best possible copies. It is recommended to clean the scanner at the start of each day and during the day, as needed.

1 Slightly dampen a soft lint-free cloth or paper towel with water.

2 Open the document cover.

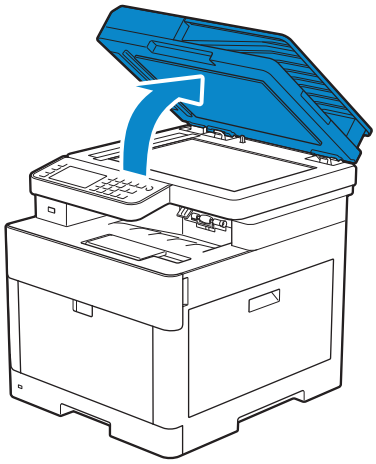

3 Wipe the surface of the document glass, DADF glass, white strip, and white document cover until it is clean, and then wipe with a dry cloth or paper towel until it is completely dry.

**NOTE:**

- Handle the white strip with care.

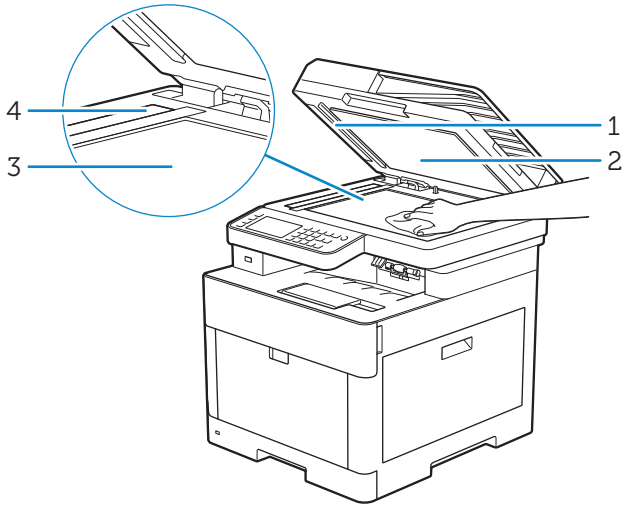


| | |
|---|---|
| 1 | White Strip |
| 2 | White Document Cover |
| 3 | Document Glass |
| 4 | DADF Glass |

4 Pull the tab to open the DADF chute cover and hold it open.

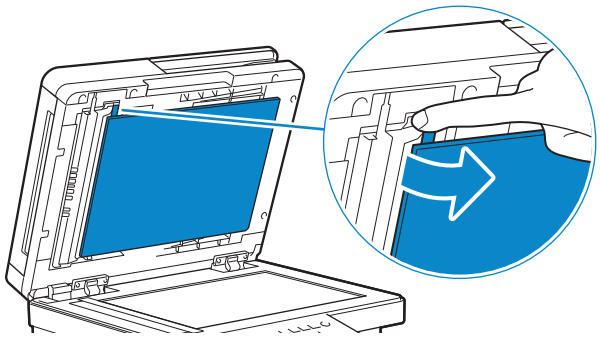

5 Wipe the surface of the duplex sensor glass and white strip until it is clean, and then wipe with a dry cloth or paper towel until it is completely dry.

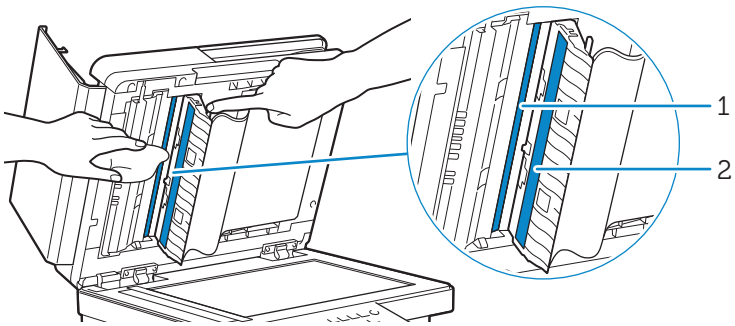

| | |
|---|---|
| 1 | Duplex Sensor Glass |
| 2 | White Strip |

6 Gently close the DADF chute cover.

7 Close the document cover.

## Cleaning the DADF Feed Rollers

Keeping the DADF feed rollers clean helps ensure the best possible copies. It is recommended to clean the DADF feed rollers at regular intervals.

1 Open the DADF cover.

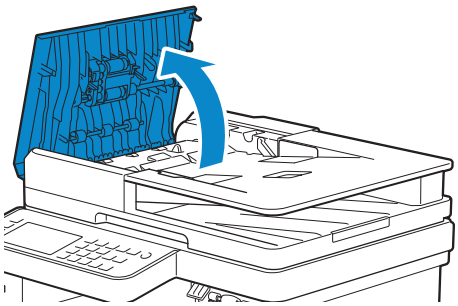

2 Wipe the DADF feed rollers with a dry soft lint-free cloth or paper towel until they are clean.

If the DADF feed rollers get stained with ink, documents that go through the DADF can also become stained. In this case, slightly dampen a soft lint-free cloth or paper towel with a neutral detergent or water, and then remove the ink stains from the DADF feed rollers until they are clean and dry.

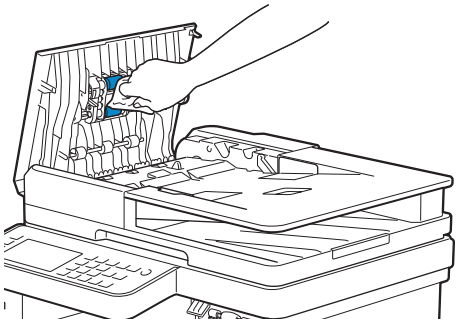

## Moving the Printer

This section describes how to move the printer.

**WARNING:**

- **Before performing any of the following procedures, read and follow the safety instructions in the *Important Information*.**
- **If the optional 550-sheet feeder (Tray2) has been installed, uninstall the optional 550-sheet feeder before moving the printer. If the optional 550-sheet feeder is not fixed securely to the printer, it may fall to the ground and cause injuries. See "Removing the Optional 550-Sheet Feeder."**

1 Turn off the printer, and then disconnect the power cord, interface cable, and any other cables.

2 Remove any paper from the DADF, and then retract the document stopper.

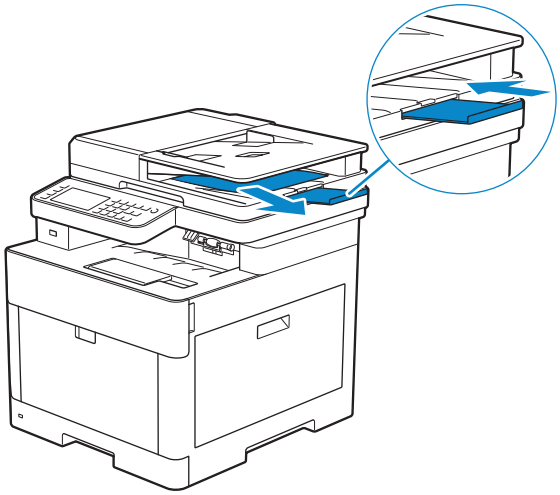

3 Remove any paper in the output tray, and then return the output tray extension.

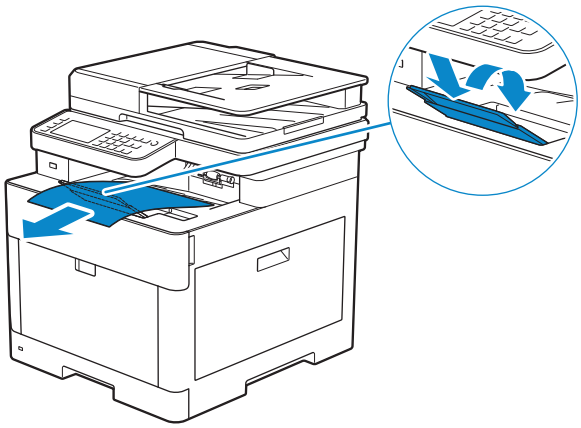

4 Lift the printer and move it gently.

**WARNING:**

- **Two people are required to lift the printer.**

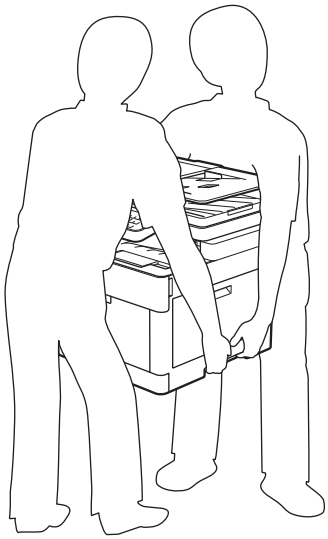

**NOTE:**

- If you move the printer over a long distance, remove the toner cartridges from the printer to prevent toner from spilling, and then pack the printer into a box. See "Replacing the Toner Cartridges."

# Removing Options

If the printer location needs to change or the printer and the optional 550-sheet feeder need to be shipped to a new location, the optional 550-sheet feeder must be removed from the printer. For shipping, pack the printer and the optional 550-sheet feeder securely to avoid damage.

## Removing the Optional 550-Sheet Feeder

**WARNING:**

- **Before removing the optional 550 sheet feeder (Tray2), make sure to turn off the printer, unplug the power cord, and disconnect all cables from the rear of the printer.**

1 Make sure that the printer is turned off, and then disconnect all cables from the rear of the printer.

2 Slide the lock switch of the optional 550-sheet feeder to the unlock position.

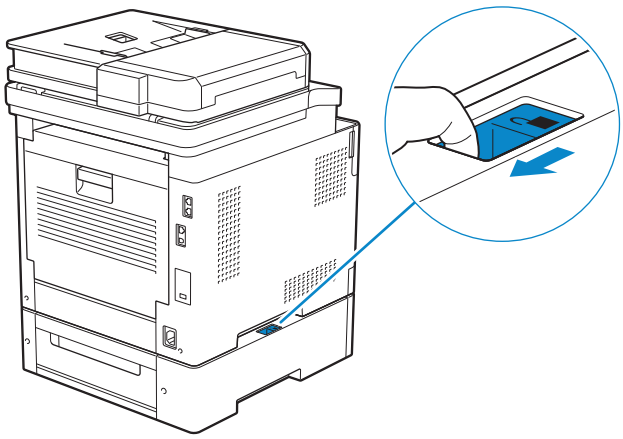

3 Gently lift the printer off the optional 550-sheet feeder, and then place it on a level surface.

**WARNING:**

- **Two people are required to lift the printer.**

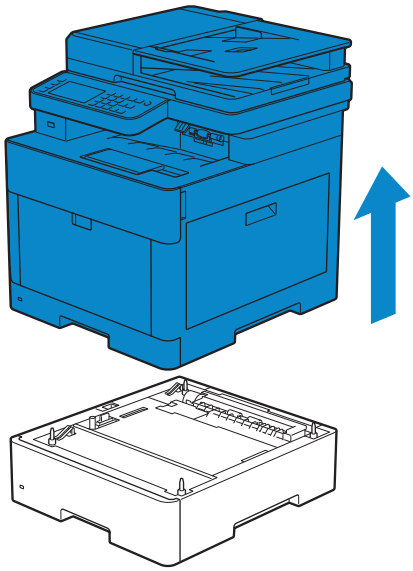

4 Connect all the cables into the rear of the printer, and then turn on the printer.

7

# Troubleshooting

Troubleshooting 348

# Troubleshooting

## Clearing Jams

**NOTE:**

- Careful selection of appropriate print media and proper loading allow you to avoid paper jams. See "Print Media Guidelines."

### Identifying the Location of Paper Jams

**CAUTION:**

- **Do not attempt to clear any jams using tools or instruments. This may permanently damage the printer.**

The following illustration shows where paper jams may occur along the print media path.

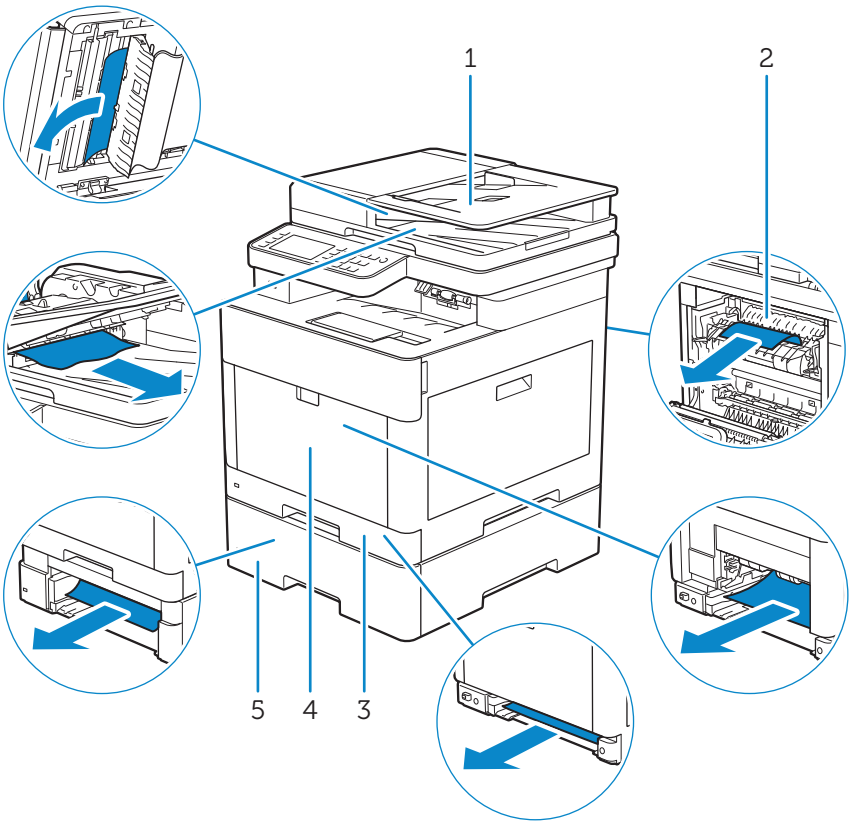


| | |
|---|---|
| 1 | Duplex Automatic Document Feeder (DADF) |
| 2 | Fusing Unit |
| 3 | Tray1 |
| 4 | Multipurpose Feeder (MPF) |
| 5 | Optional 550-Sheet Feeder |

### Clearing Paper Jams From the DADF

When a document gets jammed inside the DADF, remove the jammed documents with

the following procedures.

**NOTE:**

- To prevent document jams, use the document glass for thick, thin, or mixed documents.
- To resolve the error displayed on the touch panel, you must clear all print media from the print media path.

## Clearing Documents From the Document Feed Area and Document Exit Area

1 Remove the remaining documents from the DADF.

2 Open the DADF cover.

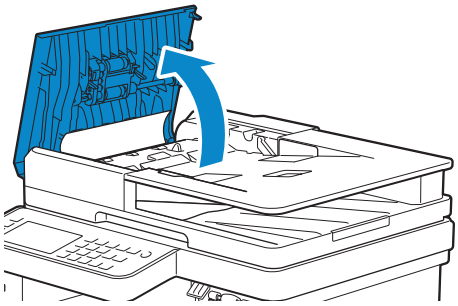

3 Remove any jammed documents from inside the DADF cover by gently pulling the document straight up.

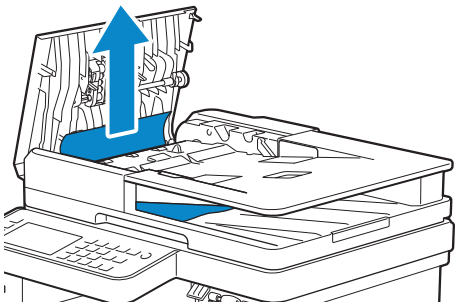

4 Lift the document feeder tray.

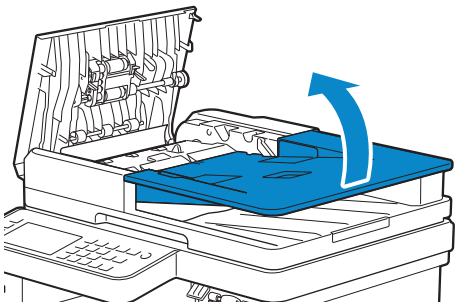

5 Remove any jammed documents from the document output tray.

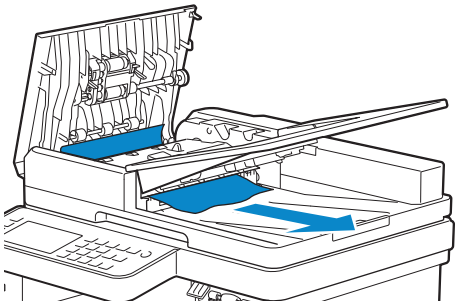

6 Close the DADF cover, and then load the documents back into the DADF.

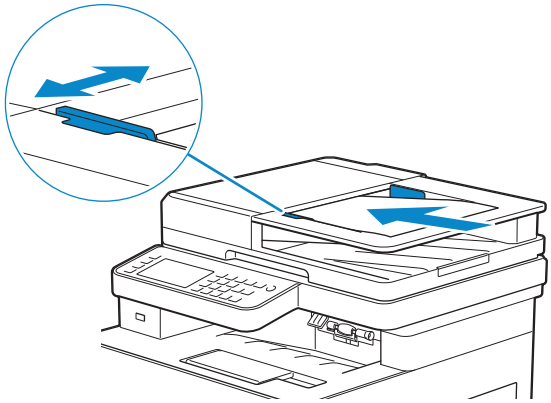

7 Tap `Start`.

## Clearing Documents From Inside the DADF Chute Cover

If you cannot remove the jammed document from the document output tray or cannot find any jammed documents, open the DADF chute cover and remove the jammed documents from there.

1 Open the document cover.

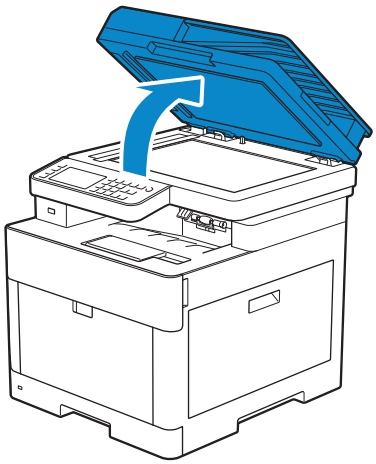

2 Pull the tab to open the DADF chute cover and hold it open.

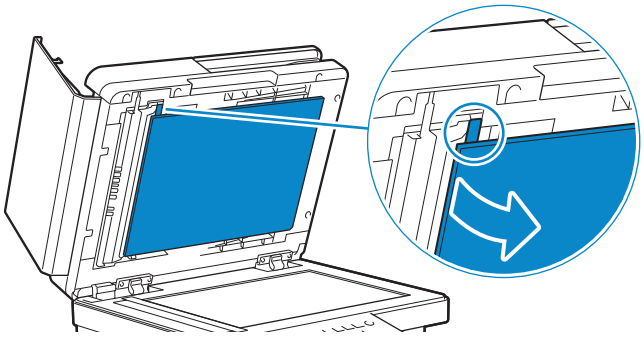

3 Remove the document from inside the DADF chute cover by carefully pulling it to the left.

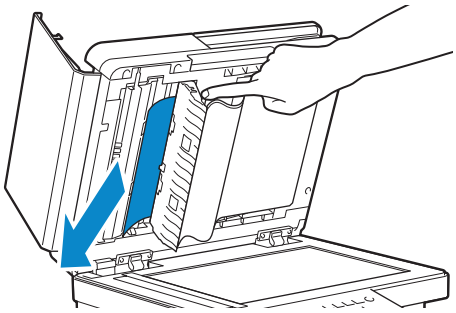

4 Gently close the DADF chute cover.

5 Close the document cover, and then load the documents back into the DADF.

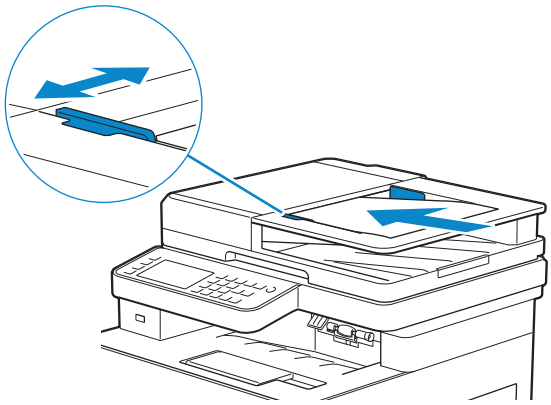

6 Tap `Start`.

## Clearing Paper Jams From the Multipurpose Feeder (MPF) and Tray1

**NOTE:**

- To resolve the error displayed on the touch panel, you must clear all print media from the print media path.

1 Gently pull and open the MPF. If the MPF is already open and is being used, remove the remaining paper loaded on the MPF.

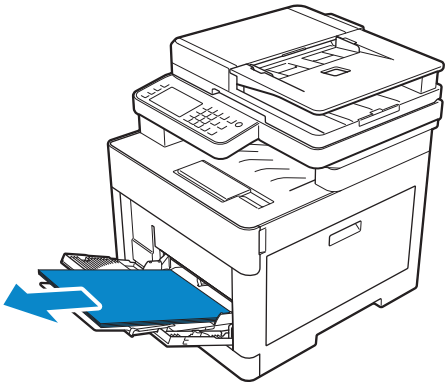

2 Grasp both sides of the MPF, and then pull it out of the printer.

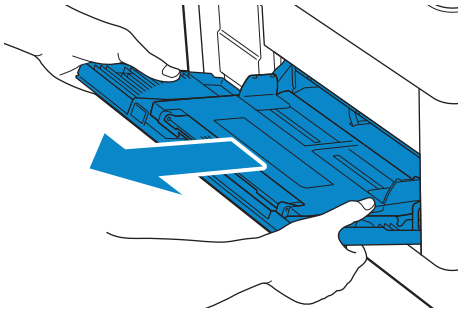

3 Pull tray1 out of the printer.

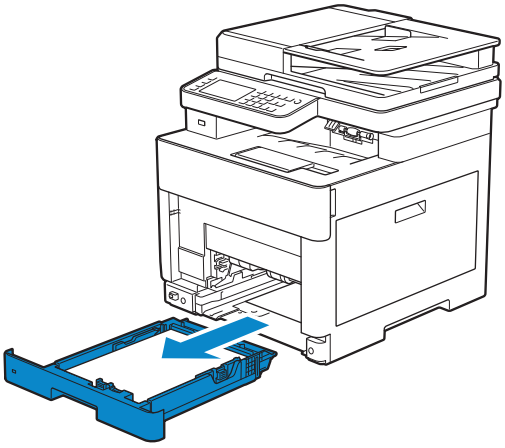

4 Remove the jammed paper.

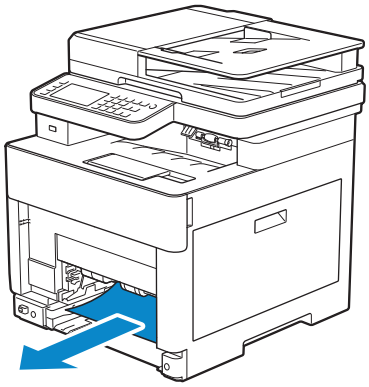

5 Insert tray1 into the printer, and then push until it stops.

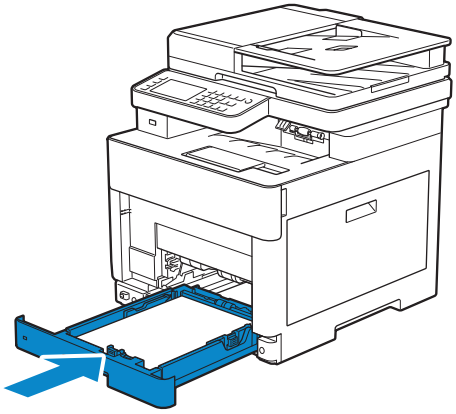

6 Insert the MPF into the printer, and then load the paper back on the MPF.

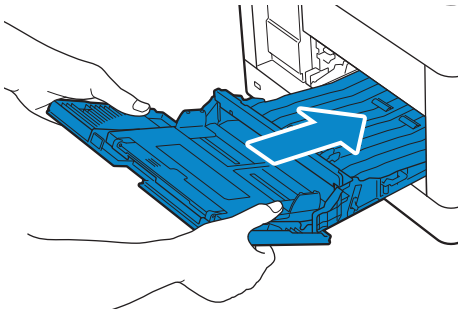

7 Tap `Start`.

## Clearing Paper Jams From Inside the Rear Cover

**NOTE:**

- To resolve the error displayed on the touch panel, you must clear all print media from the print media path.

### Clearing Paper Jams From the Fusing Unit

1 Pull up the handle lever of the rear cover, and then open the rear cover.

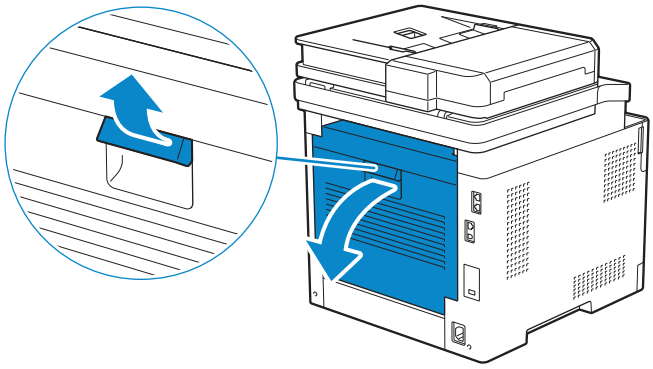

2 Remove the jammed paper from below the fusing unit.

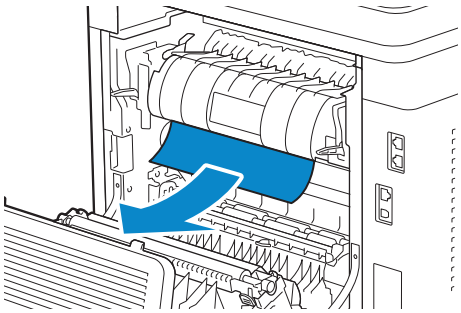

3 Pull the tab that is located above the fusing unit and hold the part open.

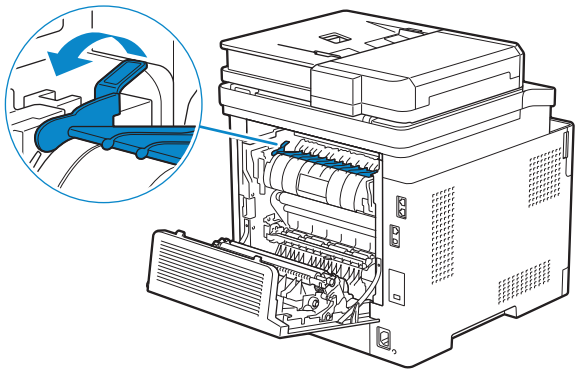

4 Remove the jammed paper.

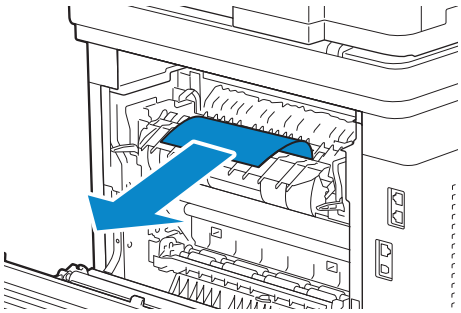

5 Gently release the tab and close the part.

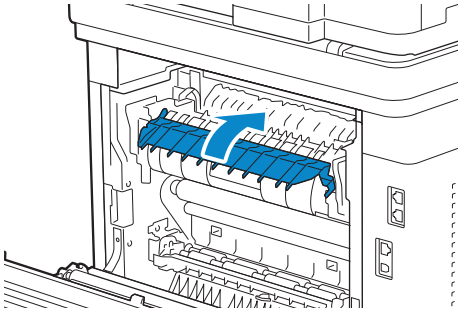

6 Close the rear cover.

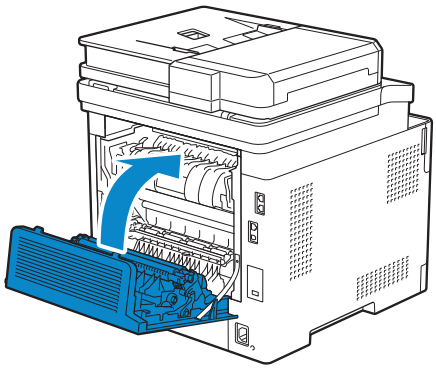

## Clearing Paper Jams From the Rear Cover

1 Pull up the handle lever of the rear cover and open the rear cover.

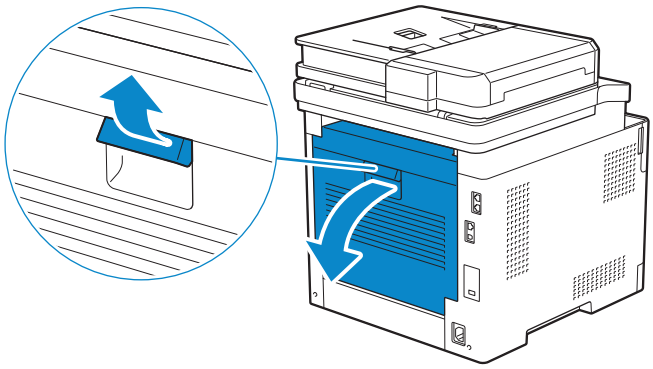

2 Remove the jammed paper.

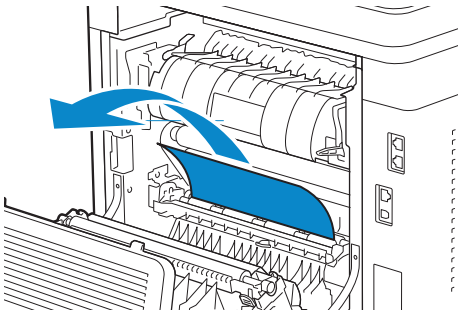

3 Close the rear cover.

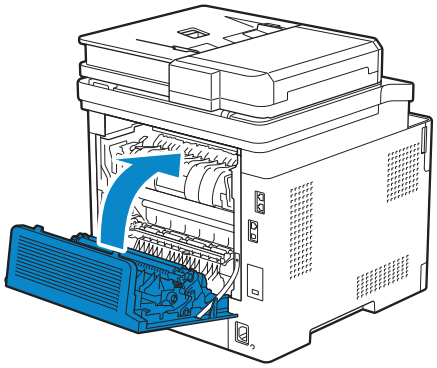

## Clearing Paper Jams From the Rear Chute

When a status code for a paper jam inside the rear cover appear but you cannot find the jammed paper, check inside the rear chute.

1 Pull up the handle lever of the rear cover, and then open the rear cover.

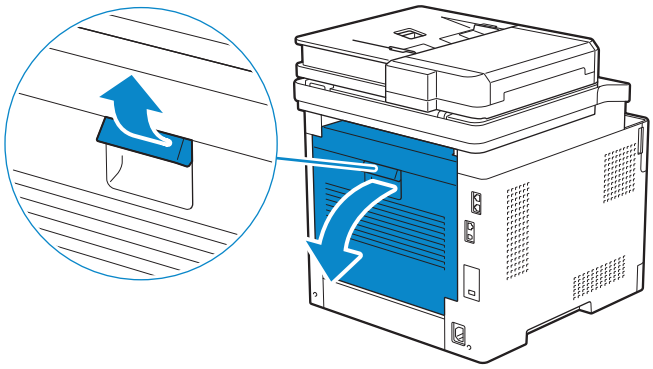

2 Pull the tab to open the rear chute.

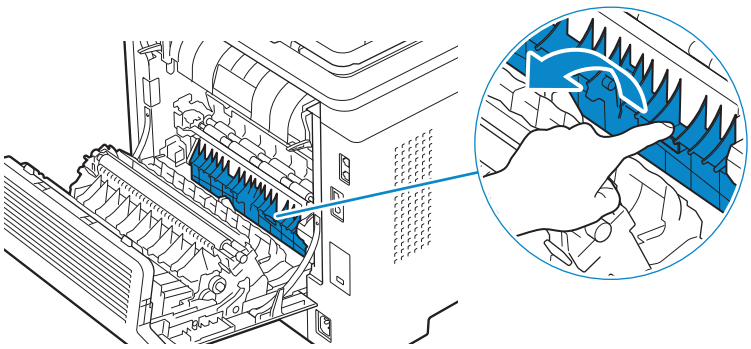

3 Remove the jammed paper.

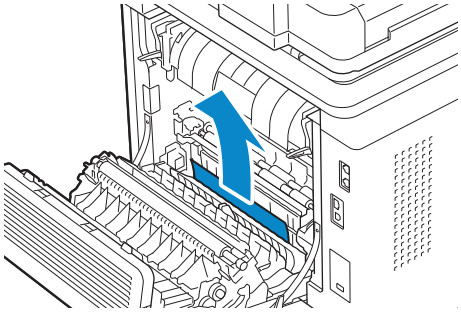

4 Close the rear cover.

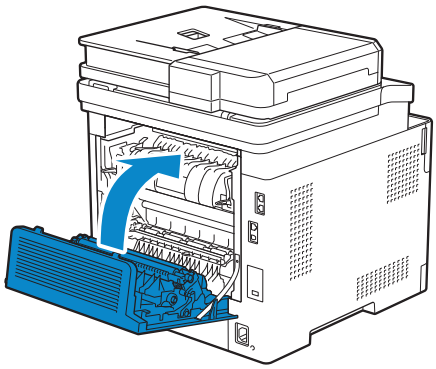

## Clearing Paper Jams From the Optional 550-Sheet Feeder

**NOTE:**

- To resolve the error displayed on the touch panel, you must clear all print media from the print media path.

1 Pull the optional 550-sheet feeder halfway out of the printer.

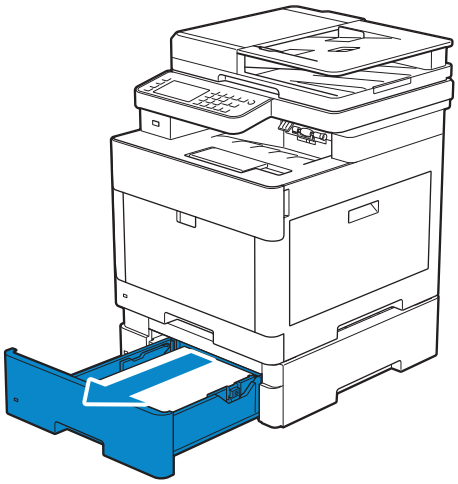

2 Hold the optional 550-sheet feeder with both hands, and then remove it from the printer.

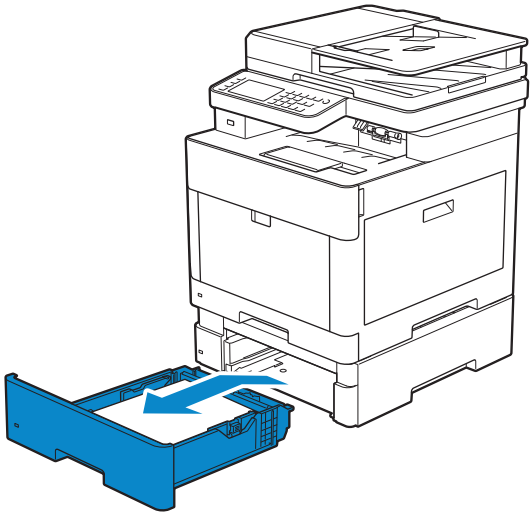

3 Remove the jammed paper.

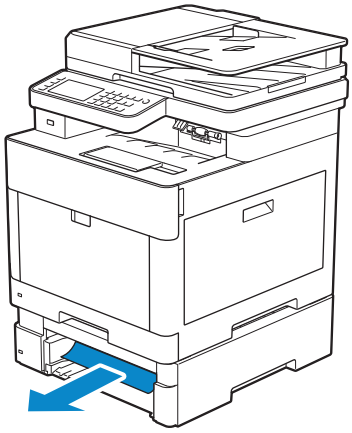

4 Insert the optional 550-sheet feeder into the printer, and then push until it stops.

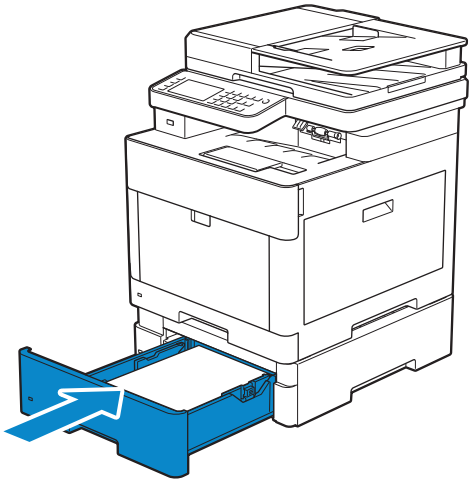

## Basic Printer Problems

Some printer problems can be easily resolved. If a problem occurs with the printer, check each of the following:

- The power cord is plugged into the printer and a properly grounded electrical outlet.
- The printer is turned on.
- The electrical outlet is not turned off at any switch or breaker.
- Other electrical equipment plugged into the outlet is working.
- All options are properly installed.

If you have checked all of the above and still have a problem, turn off the printer, wait for 10 seconds, and then turn on the printer. This often fixes the problem.

**NOTE:**

- If error messages are displayed on the touch panel or on your computer screen, follow the on-screen instructions to resolve the printer problems. See "Understanding Printer Messages."

# Display Problems

| Problem | Action |
|---|---|
| Menu settings changed from the operator panel have no effect. | Settings in the software program, the print driver, or the printer utilities have precedence over the settings made on the operator panel. |

# Printing Problems

**NOTE:**

- If `Panel Lock Control` is set to `Enable`, you need to enter the four-digit password to enter the `Admin Settings` menu.

| Problem | Action |
|---|---|
| Job did not print or incorrect characters printed. | Make sure that the top menu appears on the touch panel before you send a job to print. Press the (**Home**) button to return to the top menu. |
| | Make sure that the print media is loaded in the printer. Press the (**Home**) button to return to the top menu. |
| | Verify that the printer is using the correct Page Description Language (PDL). |
| | Verify that you are using the correct print driver. |
| | Make sure that the correct USB or Ethernet cable is securely connected to the printer. |
| | Verify that the correct print media size is selected. |
| | If you are using a print spooler, verify that the spooler has not stalled. |
| | Check the printer's interface from the `Admin Settings`.<br>Determine the host interface you are using. Print a Panel Settings page to verify that the current interface settings are correct. |

| Problem | Action |
|---|---|
| Print media misfeeds or multiple feeds occur. | Make sure that the print media you are using meets the specifications for the printer. See "Supported Print Media." |
| | Fan the print media before loading it. |
| | Make sure that the print media is loaded correctly. |
| | Make sure that the width and length guides of the print media sources are adjusted correctly. |
| | Make sure that tray1, the optional 550-sheet feeder (tray2), or the Multipurpose Feeder (MPF) unit is securely inserted. |
| | Do not overload tray1, the optional 550-sheet feeder, or the MPF. |
| | Do not force print media into the MPF when you load it; otherwise, it may skew or buckle. |
| | Make sure that the print media is not curled. |
| | Make sure that the recommended print side is facing up. See "Loading Print Media in Tray1 and the Optional 550-Sheet Feeder." |
| | Turn the print media over or around and print again to see if feeding improves. |
| | Do not mix print media types. |
| | Do not mix reams of print media. |
| | Remove the top and bottom curled sheets of a ream before loading the print media. |
| | Load print media only when tray1, the optional 550-sheet feeder, or the MPF is empty. |
| | Wipe the retard rollers in tray1, the optional 550-sheet feeder, or the MPF with a cloth moistened with water. |
| The envelope is creased after printed. | Make sure that the envelope is loaded in the MPF as instructed in "Loading Envelopes in the MPF." |
| Page breaks in unexpected places. | Increase the value for **Time-Out** using the operator panel, Tool Box, or Dell™ Printer Configuration Web Tool. |
| Print media does not stack neatly in the output tray. | Turn the print media stack over in tray1 or the MPF. |
| Printing takes time when printing from the Dell Document Hub.* | Set `Print Mode` to `>High Speed` in the printer menu. See "Print Mode." |
| Cannot print from tray1 or the optional 550-sheet feeder because the print media in tray1 or the optional 550-sheet feeder is curled. | Load the print media into the MPF. |

* Dell Document Hub is available on Dell H625cdw and Dell H825cdw.

# Print Quality Problems

**NOTE:**

- Some of the following procedures that use the Tool Box on the Dell Printer Hub and Dell Print Management Tool can be performed using the operator panel or Dell Printer Configuration Web Tool. See "Tool Box," "Understanding the System Menus," and "Dell™ Printer Configuration Web Tool."

# Light Printout

| Problem | Action | |
|---|---|---|
| The printed result is too light. | 1 | The toner cartridges may be low or need to be replaced. Check the amount of toner left in each toner cartridge.<br>**a** Check the toner level in the **Status** tab in the Status Monitor.<br>**b** Replace the toner cartridges as necessary.<br>If the problem persists, proceed to step 2. |
| | 2 | If you are using non-Dell brand toner cartridges, enable the **Non-Dell Toner** option.<br>**a** Start the Tool Box, and then click **Service Tools** on the **Printer Maintenance** tab.<br>**b** Make sure that the **On** check box under **Non-Dell Toner** is selected.<br>If the problem persists, proceed to step 3. |
| | 3 | Disable the **Toner Saver** in the print driver.<br>**a** On the **Others** tab, make sure that **Off** is selected in the **Toner Saver** drop-down menu.<br>If the problem persists, proceed to step 4. |
| | 4 | The print media surface may be uneven. Try changing the **Paper Type** setting in the print driver. For example, change the plain paper to thick.<br>**a** On the **General** tab, change the **Paper Type** setting.<br>If the problem persists, proceed to step 5. |
| | 5 | Make sure that the correct print media is being used. See "Supported Print Media." If not, use the print media recommended for the printer.<br>If the problem persists, proceed to step 6. |
| | 6 | Make sure that the transfer unit is correctly installed.<br>If the problem persists, proceed to step 7. |
| | 7 | Stir the developer in the drum cartridge.<br>**a** Start the Tool Box, and then click the **Service Tools** on the **Printer Maintenance** tab.<br>**b** Make sure that the **On** check box under **Non-Dell Toner** is selected.<br>If the problem persists, proceed to step 8. |

| Problem | Action |
|---|---|
| | 8 Clean the toner in the drum cartridge.<br>**a** After the cleaning is completed, press the (**Information**) button on the operator panel, and then tap the `Tools` tab → `Admin Settings` → `Maintenance`.<br>**b** Tap `Toner Refresh`.<br>**NOTE:**<br>• The Toner Refresh feature uses the toner, and shorten the life of the toner cartridge and the drum cartridge.<br>**c** After you refresh the toner in the drum cartridge, print a Color Test Page from the `Report / List` menu.<br>If the problem persists, proceed to step 9. |
| | 9 Replace the drum cartridges. See "Replacing the Drum Cartridges."<br>**a** After you replace the drum cartridge, start the Tool Box, and then click **Reports** on the **Printer Setting Reports** tab.<br>**b** Click **Color Test Page**.<br>The Color Test Page is printed.<br>If the problem persists, contact Dell. |

## Smearing Toner/Loose Toner

| Problem | Action |
|---|---|
| Toner smears or toner comes off. | 1 The print media surface may be uneven. Try changing the **Paper Type** setting in the print driver. For example, change the plain paper to thick.<br>**a** On the **General** tab, change the **Paper Type** setting.<br>If the problem persists, proceed to step 2. |
| | 2 Verify that the correct print media is being used. See "Supported Print Media." If not, use the print media recommended for the printer.<br>If the problem persists, proceed to step 3. |
| | 3 Replace the drum cartridges.<br>**a** Replace the drum cartridges. See "Replacing the Drum Cartridges."<br>**b** After you replace the drum cartridges, test print your document again.<br>If the problem persists, contact Dell. |

## Random Spots/Blurred Images

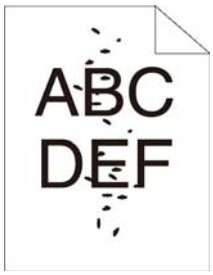


| Problem | Action |
|---|---|
| The printout has random spots or is blurred. | 1 Make sure that the toner cartridges are installed correctly. See "Installing a Toner Cartridge."<br>If the problem persists, proceed to step 2. |
| | 2 Make sure that the drum cartridges are installed correctly. See "Replacing the Drum Cartridges" and "Installing a Drum Cartridge."<br>If the problem persists, proceed to step 3. |
| | 3 Replace the drum cartridges. See "Replacing the Drum Cartridges."<br>**a** After you replace the drum cartridges, click **Chart Print** on the **Diagnosis** tab.<br>**b** Click **Pitch Configuration Chart**.<br>The Pitch Configuration Chart is printed.<br>If the problem persists, contact Dell. |

## Blank Printout

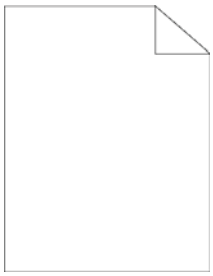

| Problem | Action |
|---|---|
| The printout is entirely blank. | 1 The toner cartridges may be low or need to be replaced. Check the amount of toner left in each toner cartridge.<br>**a** Check the toner level in the **Status** tab in the Status Monitor.<br>**b** Replace the toner cartridges as necessary.<br>If the problem persists, proceed to step 2. |
| | 2 If you are using non-Dell brand toner cartridges, enable the **Non-Dell Toner** option.<br>**a** Start the Tool Box, and then click **Service Tools** on the **Printer Maintenance** tab.<br>**b** Make sure that the **On** check box under **Non-Dell Toner** is selected.<br>If the problem persists, proceed to step 3. |

| Problem | Action | |
|---|---|---|
| | 3 | Disable the **Toner Saver** in the print driver.<br>**a** On the **Others** tab, check that **Off** is selected in the **Toner Saver** drop-down menu.<br>If the problem persists, proceed to step 4. |
| | 4 | The print media surface may be uneven. Try changing the **Paper Type** setting in the print driver. For example, change the plain paper to thick.<br>**a** On the **General** tab, change the **Paper Type** setting.<br>If the problem persists, proceed to step 5. |
| | 5 | Verify that the correct print media is being used. See "Supported Print Media." If not, use the print media recommended for the printer.<br>If the problem persists, proceed to step 6. |
| | 6 | Replace the drum cartridges. See "Replacing the Drum Cartridges."<br>**a** After you replace the drum cartridge, start the Tool Box, and then click **Reports** on the **Printer Setting Reports** tab.<br>**b** Click **Color Test Page**.<br>The Color Test Page is printed.<br>If the problem persists, contact Dell. |

## Streaks

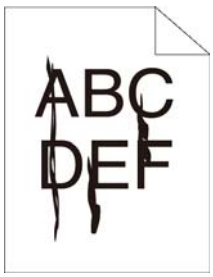


| Problem | Action | |
|---|---|---|
| Streaks appear on the printout. | 1 | The toner cartridges may be low or need to be replaced. Check the amount of toner left in each toner cartridge.<br>**a** Check the toner level in the **Status** tab in the Status Monitor.<br>**b** Replace the toner cartridges as necessary.<br>If the problem persists, proceed to step 2. |
| | 2 | If you are using non-Dell brand toner cartridges, enable the **Non-Dell Toner** option.<br>**a** Start the Tool Box, and then click **Service Tools** on the **Printer Maintenance** tab.<br>**b** Make sure that the **On** check box under **Non-Dell Toner** is selected.<br>If the problem persists, proceed to step 3. |
| | 3 | Replace the drum cartridges. See "Replacing the Drum Cartridges."<br>**a** After you replace the drum cartridge, start the Tool Box, and then click **Reports** on the **Printer Setting Reports** tab.<br>**b** Click **Color Test Page**.<br>The Color Test Page is printed.<br>If the problem persists, contact Dell. |

## Black Printout (Partial or Entire Page)

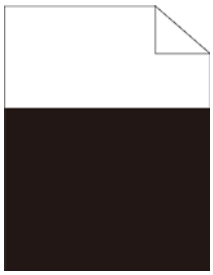

| Problem | Action |
|---|---|
| Part or the entire printout is black. | 1 Make sure that the drum cartridges are installed correctly. See "Installing a Drum Cartridge."<br>If the problem persists, proceed to step 2. |
| | 2 Check that **Output Color** is set to **Color** in the print driver.<br>**a** On the **Graphics** tab, Make sure that **Output Color** is set to **Color**.<br>If the problem persists, proceed to step 3. |
| | 3 Replace the drum cartridges. See "Replacing the Drum Cartridges."<br>**a** After you replace the drum cartridges, click **Chart Print** on the **Diagnosis** tab.<br>**b** Click **4 Colors Configuration Chart**.<br>The 4 Colors Configuration Chart is printed.<br>If the problem persists, contact Dell. |

## Equally Spaced Colored Dots

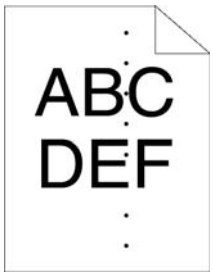


| Problem | Action |
|---|---|
| The printout has equally spaced colored dots | 1 Locate the cause of the problem using the Pitch Configuration Chart.<br>**a** Start the Tool Box, and then click **Chart Print** on the **Diagnosis** tab.<br>**b** Click **Pitch Configuration Chart**.<br>The Pitch Configuration Chart is printed.<br>**c** Compare the space between the color spots on your output with that on the Pitch Configuration Chart, and then locate the cause of the problem.<br>If the location of the problem is drum cartridge, proceed to step 2.<br>If the cause of the problem is not located, contact Dell. |

| Problem | Action |
|---|---|
| | 2 Replace the drum cartridges. See "Replacing the Drum Cartridges."<br>**a** After you replace the drum cartridges, click **Chart Print** on the **Diagnosis** tab.<br>**b** Click **Pitch Configuration Chart**.<br>The Pitch Configuration Chart is printed.<br>If the problem persists, contact Dell. |

## Vertical Blanks

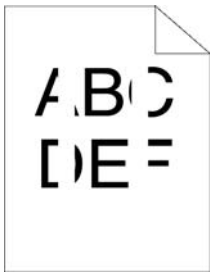

| Problem | Action |
|---|---|
| The printout has vertical blanks. | 1 Clean inside the printer by using the cleaning rod. See "Cleaning the LED Print Head."<br>**a** After the cleaning is completed, start the Tool Box, and then click **Chart Print** on the **Diagnosis** tab.<br>**b** Click **Pitch Configuration Chart**.<br>The Pitch Configuration Chart is printed.<br>If the problem persists, proceed to step 2. |
| | 2 Check if the light path is not covered.<br>**a** Remove the drum cartridges, and then keep them in the dark place. See "Replacing the Drum Cartridges."<br>**b** Check the light path, and then remove the shielding.<br>**c** Re-install the drum cartridges. See "Installing a Drum Cartridge."<br>**d** Start the Tool Box, and then click **Chart Print** on the **Diagnosis** tab.<br>**e** Click **Pitch Configuration Chart**.<br>The Pitch Configuration Chart is printed.<br>If the problem persists, proceed to step 3. |
| | 3 Replace the drum cartridges. See "Replacing the Drum Cartridges."<br>**a** After you replace the drum cartridge, start the Tool Box, and then click **Reports** on the **Printer Setting Reports** tab.<br>**b** Click **Color Test Page**.<br>The Color Test Page is printed.<br>If the problem persists, contact Dell. |

## Mottle

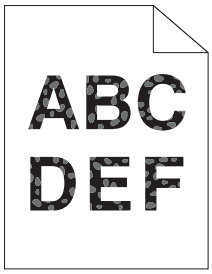


| Problem | Action |
|---|---|
| The printout is mottled. | 1 Verity that the correct print media is being used. See “Supported Print Media.” If not, use the print media recommended for the printer.<br>If the problem persists, proceed to step 2. |
| | 2 Raise the transfer unit voltage.<br>**a** Start the **Tool Box**, and then click **Adjust 2nd BTR** on the **Printer Maintenance** tab.<br>**b** Increase the voltage. See “Printer Maintenance.” |
| | 3 Replace the drum cartridges. See "Replacing the Drum Cartridges."<br>**a** After you replace the drum cartridge, start the Tool Box, and then click **Reports** on the **Printer Setting Reports** tab.<br>**b** Click **Color Test Page**.<br>The Color Test Page is printed.<br>If the problem persists, contact Dell. |

## Ghosting

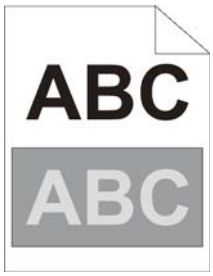


| Problem | Action |
|---|---|
| The printout has ghosting. | 1 Identify the type of ghosting.<br>Positive ghost 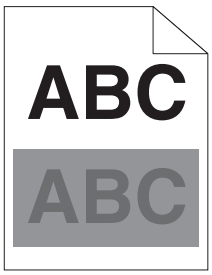 Negative ghost 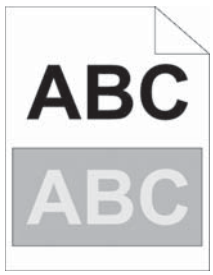 <br>If the type of ghosting is positive ghost, proceed to step 2a.<br>If the type of ghosting is negative ghost, proceed to step 2c.<br>If the type of ghosting is not identified, contact Dell. |

| Problem | Action |
|---|---|
| | 2a Specify Decrease Ghosting to On.<br>**a** Press the (**Information**) button, and then tap the `Tools` tab → `Admin Settings` → `Maintenance` → `Decrease Ghosting`.<br>**b** Tap `On`.<br>**c** Tap `OK`.<br>If the problem persists, proceed to step 2b. |
| | 2b Adjust the transfer bias.<br>**a** Press the (**Information**) button and tap the `Tools` tab → `Admin Settings` → `Maintenance` → `Adjust Transfer Belt Unit`.<br>**b** Tap `K Offset` or `YMC Offset`, and then decrease the value.<br>If the problem persists, proceed to step 3. |
| | 2c Adjust the transfer bias.<br>**a** Press the (**Information**) button and tap the `Tools` tab → `Admin Settings` → `Maintenance` → `Adjust Transfer Belt Unit`.<br>**b** Tap `K Offset` or `YMC Offset`, and then increase the value.<br>If the problem persists, proceed to step 3. |
| | 3 Make sure that the correct print media is being used. See "Supported Print Media." If not, use the print media recommended for the printer.<br>If the problem persists, proceed to step 4. |
| | 4 Replace the drum cartridges. See "Replacing the Drum Cartridges."<br>**a** After you replace the drum cartridges, click **Chart Print** on the **Diagnosis** tab.<br>**b** Click **Ghost Configuration Chart**.<br>The Ghost Configuration Chart is printed.<br>If the problem persists, contact Dell. |

## Light-Induced Fatigue

| Problem | Action |
|---|---|
| The printout has light-induced fatigue pattern. | 1 Check the light fatigue pattern using the Pitch Configuration Chart.<br>**a** Start the Tool Box, and then click **Chart Print** on the **Diagnosis** tab.<br>**b** Click **Pitch Configuration Chart**.<br>The Pitch Configuration Chart is printed.<br>If the pattern on the output match with that on the Pitch Configuration Chart, proceed to step 2.<br>If the problem persists, contact Dell. |

| Problem | Action |
|---|---|
| | 2 Replace the drum cartridges. See "Replacing the Drum Cartridges."<br>If the problem persists, contact Dell. |

## Fog

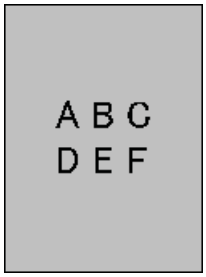


| Problem | Action |
|---|---|
| The printed result is foggy. | 1a If you use a non-Dell brand toner cartridge, enable the Non-Dell Toner option.<br>**a** Start the Tool Box, and then click the **Service Tools** on the **Printer Maintenance** tab.<br>**b** Make sure that the **On** check box under **Non-Dell Toner** is selected.<br>If the problem persists, proceed to step 2. |
| | 1b If you use a Dell toner, replace the drum cartridges. See "Replacing the Drum Cartridges."<br>**a** After you replace the drum cartridge, start the Tool Box, and then click **Reports** on the **Printer Setting Reports** tab.<br>**b** Click **Color Test Page**.<br>If the problem persists, contact Dell. |
| | 2 Replace the drum cartridge and the toner cartridge with a Dell toner. See "Replacing the Drum Cartridges."<br>**a** After you replace the drum cartridge and toner cartridge, start the Tool Box, and then click **Reports** on the **Printer Setting Reports** tab.<br>**b** Click **Color Test Page**.<br>If the problem persists, contact Dell. |

## Bead-Carry-Out (BCO)

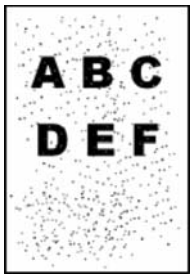

| Problem | Action | |
|---|---|---|
| Bead-Carry-Out (BCO) occurs. | 1 | If the printer is installed in a high altitude location, set the altitude of the location.<br>**a** Start the Tool Box, and then click **Service Tools** on the **Printer Maintenance** tab.<br>**b** Under **Adjust Altitude**, select the value close to the altitude of the location where the printer is installed.<br>If the problem persists, proceed to step 2. |
| | 2 | Replace the drum cartridges. See "Replacing the Drum Cartridges."<br>If the problem persists, contact Dell. |

## Jagged Characters

| Problem | Action | |
|---|---|---|
| The printout has jagged characters. | 1 | Set **Screen** to **Fineness** in the print driver.<br>**a** On the **Others** tab, set **Screen** under **Items:** to **Fineness**.<br>If the problem persists, proceed to step 2. |
| | 2 | Set **Print Mode** to **High Quality** in the print driver.<br>**a** On the **Graphics** tab, make sure that **Output Color** is set to **Color**.<br>**b** Select **High Quality** from **Print Mode**.<br>If the problem persists, proceed to step 3. |
| | 3 | Enable **Print Page Mode** in the print driver.<br>**a** On the **Others** tab, set **Print Page Mode** under **Items:** to **On**.<br>If the problem persists, proceed to step 4. |
| | 4 | If using a downloaded font, make sure that the font is compatible for the printer, operating system, and the program being used.<br>If the problem persists, contact Dell. |

## Horizontal Bands

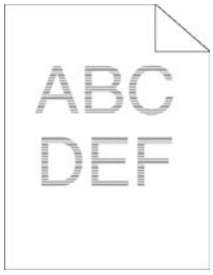

| Problem | Action |
|---|---|
| The printout has horizontal bands. | 1 Locate the cause of the problem using the Pitch Configuration Chart.<br>**a** Start the Tool Box, and then click **Chart Print** on the **Diagnosis** tab.<br>**b** Click **Pitch Configuration Chart**.<br>The Pitch Configuration Chart is printed.<br>If the location of the problem is drum cartridge, proceed to step 2.<br>If the cause of the problem is not located, contact Dell. |
| | 2 Replace the drum cartridges. See "Replacing the Drum Cartridges."<br>**a** After you replace the drum cartridges, click **Chart Print** on the **Diagnosis** tab.<br>**b** Click **Pitch Configuration Chart**.<br>The Pitch Configuration Chart is printed.<br>If the problem persists, contact Dell. |

## Diagonal Lines

| Problem | Action |
|---|---|
| The printout has diagonal lines. | 1 Locate the cause of the problem using the Pitch Configuration Chart.<br>**a** Start the Tool Box, and then click **Chart Print** on the **Diagnosis** tab.<br>**b** Click **Pitch Configuration Chart**.<br>The Pitch Configuration Chart is printed.<br>If the output matches with the pattern for diagonal lines, proceed to step 2.<br>If the output does not match with the pattern for diagonal lines, contact Dell. |
| | 2 Replace the drum cartridges. See "Replacing the Drum Cartridges."<br>If the problem persists, contact Dell. |

## Wrinkled/Stained Printout

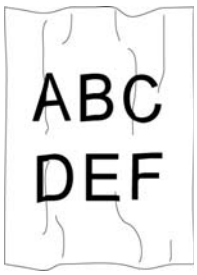

| Problem | Action | |
|---|---|---|
| The printout is wrinkled.<br>The printout is stained. | 1 | Verify that the correct print media is being used. See "Supported Print Media." If not, use the print media recommended for the printer.<br>If the problem persists and printing on an envelope, proceed to step 2.<br>If the problem persists and printing on print media other than envelopes, contact Dell. |
| | 2 | Make sure that the wrinkle of the four edges of the envelope is within 30 mm. |
| | 3 | Load the envelopes in the Multipurpose Feeder (MPF) properly. See "Loading Envelopes in the MPF."<br>If the problem persists, contact Dell. |

## Damage on the Leading Edge of Printout

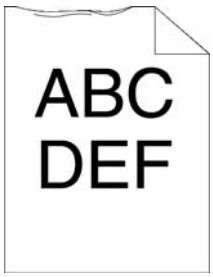


| Problem | Action | |
|---|---|---|
| The printout is damaged on its leading edge. | 1 | When using the Multipurpose Feeder (MPF), reverse the paper and then try again.<br>If the problem persists, proceed to step 2a.<br>When using any of the trays, change the paper and then try again.<br>If the problem persists, proceed to step 2b. |
| | 2a | Change the paper with another one and then try again.<br>If the problem persists, proceed to step 2b. |
| | 2b | Use any of the trays in place of the MPF.<br>If the problem persists, contact Dell. |

# Jam/Alignment Problems

**NOTE:**

- Some of the following procedures that use the Tool Box on the Dell Printer Hub and Dell Print Management Tool can be performed using the operator panel or Dell Printer Configuration Web Tool. See "Tool Box," "Understanding the System Menus," and "Dell™ Printer Configuration Web Tool."

## Incorrect Margins on the Top and Side

| Problem | Action |
|---|---|
| The top and side margins are incorrect. | 1 Make sure that the margins are set correctly on the program being used.<br>If the problem persists, contact Dell. |

## Disorganized Color Registration

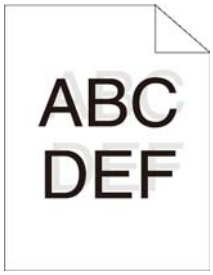


| Problem | Action |
|---|---|
| Color registration is out of alignment. | 1 Adjust the settings of the paper type on the print driver to those of the tray or feeder.<br>If the problem persists, proceed to step 2. |
| | 2 Execute auto color registration adjustment.<br>**a** Press the ⓘ (**Information**) button and tap the `Tools` tab → `Admin Settings` → `Maintenance` → `Color Reg Adjust` → `Auto Correct` → `Start`.<br>If the problem persists, contact Dell. |

## Skewed Images

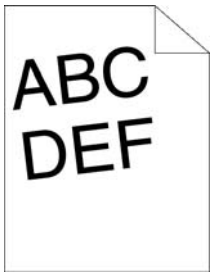


| Problem | Action |
|---|---|
| The printout is skewed. | 1 Adjust the paper guides properly.<br>If the problem persists, contact Dell. |

## Tray1/Optional 550-Sheet Feeder Misfeed Jam

| Problem | Action | |
|---|---|---|
| Print media misfeeds occur in tray1 or the optional 550-sheet feeder. | 1 | Make sure that tray1 or the optional 550-sheet feeder is properly inserted.<br>If the type of the print media being used is thick, proceed to 2a.<br>If the type of the print media being used is thin, proceed to 2b.<br>If the type of the print media being used is coated, proceed to 2c.<br>If using paper other than the above, proceed to steps 2d and 2e. |
| | 2a | Use thick paper that is 216 g/m$^2$ or less.<br>If the problem persists, proceed to step 3a. |
| | 2b | Use thin paper that is 60 g/m$^2$ or more.<br>If the problem persists, proceed to step 3a. |
| | 2c | Load coated paper one sheet at a time.<br>If the problem persists, proceed to step 3b. |
| | 2d | Make sure that the print media is not curled.<br>If the problem persists, proceed to step 3b. |
| | 2e | Make sure that the print media is not damp.<br>If the print media is not damp, proceed to step 3a.<br>If the print media is damp, proceed to step 3c. |
| | 3a | Fan the print media.<br>If the problem persists, proceed to step 3b. |
| | 3b | Wipe the retard roller in tray1 or the optional 550-sheet feeder with a cloth moistened with water.<br>If the problem persists, proceed to step 4b. |
| | 3c | Turn over the print media.<br>If the problem persists, proceed to step 4a. |
| | 4a | Use print media that is not damp.<br>If the problem persists, proceed to step 3a. |
| | 4b | Replace the drum cartridges.<br>If the problem persists, contact Dell. |

## Multipurpose Feeder (MPF) Misfeed Jam

| Problem | Action | |
|---|---|---|
| Print media misfeeds occur in the MPF. | 1 | Make sure that the MPF is properly inserted.<br>If the type of the print media being used is thick, proceed to 2a.<br>If the type of the print media being used is thin, proceed to 2b.<br>If the type of the print media being used is coated, proceed to 2c.<br>If the type of the print media being used is envelope, proceed to 2d.<br>If using paper other than the above, proceed to step 2e. |
| | 2a | Use thick paper that is 216 g/m$^2$ or less.<br>If the problem persists, proceed to step 3a. |
| | 2b | Use thin paper that is 60 g/m$^2$ or more.<br>If the problem persists, proceed to step 3a. |
| | 2c | Load coated paper one sheet at a time.<br>If the problem persists, proceed to step 3b. |

| Problem | Action | |
|---|---|---|
| | 2d | Make sure that the envelope is properly loaded in the MPF as instructed in "Loading Envelopes in the MPF."<br>If the problem persists, proceed to step 3c. |
| | 2e | Make sure that the print media is not damp.<br>If the print media is not damp, proceed to step 3a.<br>If the print media is damp, proceed to step 3c. |
| | 3a | Fan the print media.<br>If the problem persists, proceed to step 3b. |
| | 3b | Wipe the retard roller in the MPF with a cloth moistened with water.<br>If the problem persists, proceed to step 4a. |
| | 3c | If the envelope is deformed, correct it or use another envelope.<br>If the problem persists, proceed to step 3a. |
| | 3d | Turn over the print media.<br>If the problem persists, proceed to step 4a. |
| | 4a | Use print media that is not damp.<br>If the problem persists, proceed to step 4b. |
| | 4b | Replace the drum cartridges.<br>If the problem persists, contact Dell. |

## Regi Jam (Exit Sensor On JAM)

| Problem | Action | |
|---|---|---|
| Regi jam (Exit Sensor On JAM) occurs. | 1 | Make sure that the drum cartridges are installed correctly.<br>If the problem persists, proceed to step 2. |
| | 2 | Replace the drum cartridges. See "Replacing the Drum Cartridges."<br>If the problem persists, contact Dell. |

## Tray1/Optional 550-Sheet Feeder Multi-feed Jam

| Problem | Action | |
|---|---|---|
| Print media multiple-feeds occur in tray1 or optional 550-sheet feeder. | 1 | Make sure that tray1 or the optional 550-sheet feeder is properly inserted.<br>If using coated paper, proceed to step 2a.<br>If using other type of print media, proceed to step 2b. |
| | 2a | Load coated paper one sheet at a time.<br>If the problem persists, proceed to step 3. |
| | 2b | Use print media that is not damp.<br>If the problem persists, proceed to step 3. |
| | 3 | Fan the print media.<br>If the problem persists, proceed to step 4. |
| | 4 | Wipe the retard roller in tray1 or the optional 550-sheet feeder where the multi-feed occurred with a cloth moistened with water.<br>If the problem persists, contact Dell. |

## Multipurpose Feeder (MPF) Multi-feed Jam

| Problem | Action | |
|---|---|---|
| Print media multiple feeds occur in the MPF. | 1 | Check the media type you are using.<br>If using coated paper, proceed to step 2a.<br>If using other type of print media, proceed to step 2b. |
| | 2a | Load coated paper one sheet at a time.<br>If the problem persists, proceed to step 3. |
| | 2b | Use print media that is not damp.<br>If the problem persists, proceed to step 3. |
| | 3 | Fan the print media.<br>If the problem persists, proceed to step 4. |
| | 4 | Wipe the retard roller in the MPF where the multi-feed occurred with a cloth moistened with water.<br>If the problem persists, proceed to step 5. |
| | 5 | Decrease the number of print media to be loaded to the MPF.<br>If the problem persists, contact Dell. |

# Noise

| Problem | Action | |
|---|---|---|
| The printout has noise. | 1 | To specify the cause of the noise, perform the Auto Registration Adjustment.<br>If the problem persists, proceed to step 2. |
| | 2 | Replace the waste toner box. See "Replacing the Waste Toner Box."<br>If the problem persists, proceed to step 3. |
| | 3 | Replace the drum cartridges. See "Replacing the Drum Cartridges."<br>If the problem persists, proceed to step 4. |
| | 4 | Replace the toner cartridge (K). See "Replacing the Toner Cartridges."<br>If the problem persists, proceed to step 5. |
| | 5 | Replace the toner cartridge (Y). See "Replacing the Toner Cartridges."<br>If the problem persists, proceed to step 6. |
| | 6 | Replace the toner cartridge (M). See "Replacing the Toner Cartridges."<br>If the problem persists, proceed to step 7. |
| | 7 | Replace the toner cartridge (C). See "Replacing the Toner Cartridges."<br>If the problem persists, contact Dell. |

# Copy Problems

| Problem | Action |
|---|---|
| A document loaded in the DADF cannot be copied. | Make sure that the DADF cover is firmly closed. |
| | Make sure that the release lever is properly positioned. |
| Vertical blanks or streaks appear on the output when scanned using the DADF. | Clean the DADF glass. See "Cleaning the Scanner." |
| | Clean inside the printer by using the cleaning rod. See "Cleaning the LED Print Head." |

| Problem | Action |
|---|---|
| The copy is misaligned or skewed. | Before loading the document(s) on the DADF, straighten the edges of the stack of the document(s). |
| | Load the document correctly, and align the document guides to the document. See "Loading a Document in the Duplex Automatic Document Feeder (DADF)." |

# Fax Problems

**NOTE:**

- If `Panel Lock Control` is set to `Enable`, you need to enter the four-digit password to enter the `Admin Settings` menu.

| Problem | Action |
|---|---|
| The printer is not working, there is no display and the buttons are not working. | Unplug the power cord and plug it in again. |
| | Make sure that there is power to the electrical receptacle. |
| No dial tone sounds. | Make sure that the phone line is connected properly. See "Connecting Your Printer to a Telephone Line." |
| | Make sure that the phone socket in the wall is working by plugging in another phone. |
| | Diagnose the fax connection. See "Fax Line Test." |
| The numbers stored in the memory do not dial correctly. | Make sure that the numbers are stored in the memory correctly. |
| | Print a Phone Book list. |
| The document does not feed into the printer. | Make sure that the document is not wrinkled and you are putting it in correctly. Check that the document is of the right size, not too thick or thin. |
| | Make sure that the DADF cover is firmly closed. |
| Faxes are not received automatically. | The `FAX` mode should be selected. |
| | Make sure that there is paper in the paper tray. |
| | Check if `MPF Memory Full` is displayed on the touch panel. |
| | If the time interval specified for the following features is too long, change the time interval shorter such as 30 seconds.<br>• Auto Rec Fax<br>• Auto Rec TEL/FAX<br>• Auto Rec Ans/FAX |
| | Diagnose the fax connection. See "Fax Line Test." |
| The printer does not send faxes. | `Sending Fax` should show up on the touch panel. |
| | Check the other fax machine you are sending to, to see if it can receive your fax. |
| | Check the dialing type for `Tone` , `Pulse(10PPS)` or `Pulse(20PPS)`. |
| | Make sure that the document is loaded in the DADF or on the document glass. |
| | Diagnose the fax connection. See "Fax Line Test." |
| The incoming fax has blank spaces or is received in poor quality. | Check the printer by making a copy. |
| | The toner cartridge may be empty. Replace the toner cartridge. See "Replacing the Toner Cartridges." |
| | A noisy phone line can cause line errors. Set the fax modem speed to a slower speed. |
| | The remote machine may be faulty. |

| Problem | Action |
|---|---|
| Some of the words on an incoming fax are stretched. | The remote machine had a temporary document jam. |
| There are lines on the documents you send. | Check the surface of the document glass and DADF glass for marks and clean it. See "Cleaning the Scanner." |
| The printer dials a number, but the connection with the remote machine fails. | The remote machine may be turned off, out of paper, or cannot answer incoming calls. Speak with the remote machine operator and ask her/him to sort out the problem. |
| Documents are not stored in the memory. | There may not be enough memory to store the document. If `MPF Memory Full` is displayed on the touch panel, delete any documents you no longer need from the memory. And then, restore the document, or wait for the job in progress such as fax transmission or reception to complete. |
| Blank areas appear at the bottom of each page or on other pages, with a small strip of text at the top. | You may have chosen the wrong paper settings in the user option setting. See "Print Media Guidelines." |
| The printer does not send or receive faxes. | Make sure that the country code is set correctly.<br>Press the (**Information**) button and tap the `Tools` tab → `Admin Settings` → `Fax Settings` → `Fax Line Settings` → `Country`. |
| | Check the dialing type for Tone or Pulse. |
| | Make sure that the cables are connected properly. |
| | If the telephone line cord is connected to the printer via any device such as an answering machine and a computer, remove the device and directly connect the telephone line cord to the printer. |
| | Make sure that `Junk Fax Setup` is set to `off`. |
| An error often occurs during a fax transmission or reception. | Reduce the modem speed.<br>Press the (**Information**) button and tap the `Tools` tab → `Admin Settings` → `Fax Settings` → `Transmission Defaults` → `Modem Speed`. |
| The printer receive faxes, but it does not print. | Check the toner level. |
| | Make sure that there is paper in the paper tray. |
| | Make sure that `Received Fax Forward` is set to `Off`. |
| | Make sure that the printer is in the secure receiving mode. If this mode is turned on, enter the correct password or turn off this mode to print faxes in memory. |

# Scanning Problems

| Problem | Action |
|---|---|
| The scanner does not work. | Make sure that you place the document to be scanned facing down on the document glass, or facing up in the DADF. |
| | There may not be enough available memory to hold the document you want to scan. Lower the scan resolution rate and then try scanning again. |
| | Make sure that the USB or Ethernet cable is connected properly. |
| | Make sure that the USB or Ethernet cable is not defective. Switch the cable with a known good cable. If necessary, replace the cable. |
| | If using the network TWAIN or Windows® Image Acquisition (WIA) driver, check that the Ethernet cable is connected properly and the IP address of the printer is set correctly. See "Verifying the IP Settings." |

| Problem | Action |
|---|---|
| | Make sure that the scanner is configured correctly. Check the program you want to use to make certain that the scanner job is being sent to the correct port. |
| | Make sure that the scanner sharing feature of a Macintosh is disabled before you scan documents via an ICA compatible program such as Image Capture. The printer does not support the scanner sharing feature of Mac OS X. Select a printer which is directly connected to the computer via USB or wired/wireless LAN and scan documents. |
| The printer scans very slowly. | Graphics are scanned more slowly than text when using the Scan to Email or Scan to Network Folder feature. |
| | Communication speed becomes slow in scan mode because of the large amount of memory required to analyze and reproduce the scanned data. |
| | Scanning images at a high resolution takes more time than scanning at a low resolution. |
| Document misfeeds or multiple feeds occur in the DADF. | Make sure that the DADF roller assembly is installed properly. |
| | Make sure that the document's paper type meets the specifications for the printer. See "Supported Print Media." |
| | Make sure that the document is properly loaded in the DADF. |
| | Make sure that the document guides are adjusted properly. |
| | Make sure that the number of document sheets does not exceed the maximum capacity of the DADF. |
| | Make sure that the document is not curled. |
| | Fan the document well before loading it in the DADF. |
| Vertical blanks or streaks appear on the output when scanned using the DADF. | Clean the DADF glass. See "Cleaning the Scanner." |
| A smear appears at the same location on the output when scanned using the document glass. | Clean the document glass. See "Cleaning the Scanner." |
| Images are skewed. | Make sure that the document is loaded straight in the DADF or on the document glass. |
| | Before loading the document(s) on the DADF, straighten the edges of the stack of the document(s). |
| Diagonal lines appear jagged when scanned using the DADF. | For documents of thick paper, use the document glass. |
| Message appears on your computer screen:<br>• "Device can't be set to the H/W mode you want."<br>• "Port is being used by another program."<br>• "Port is Disabled."<br>• "Scanner is busy receiving or printing data. When the current job is completed, try again."<br>• "Invalid handle."<br>• "Scanning has failed." | There may be a copy or print job in progress. When the current job is complete, try the job again. |
| | The selected port is currently being used. Restart your computer and try again. |
| | The cable may be improperly connected or the printer may be turned off. |
| | The scanner driver is not installed or an operating environment is not set up properly. |
| | Make sure that the port is properly connected and the printer is turned on. Then restart your computer. |
| | Make sure that the USB or Ethernet cable is connected properly. |

| Problem | Action |
|---|---|
| The printer does not properly transfer scan data to a specified destination via the **Scan to Email** or **Scan to Network Folder** feature. | Make sure that the following settings have been set correctly on the Dell Printer Configuration Web Tool.<br>**Scan to Network Folder:**<br>Check the following settings under **Address Book** → **Server Address**.<br>• **Server Address**<br>• **Share Name**<br>• **Server Path**<br>• **Login Name**<br>• **Login Password**<br>**Scan to Email:**<br>Check the following setting under **Address Book** → **E-Mail Address**.<br>• **Address** |
| Scanning using TWAIN or Windows® Image Acquisition (WIA) cannot be performed on a Windows Server® 2008 or Windows Server® 2008 R2 computer. | Install Desktop Experience on the computer.<br>To install Desktop Experience:<br>**1** Click **Start**, point to **Administrative Tools**, and then click **Server Manager**.<br>**2** Under **Features Summary**, click **Add Features**.<br>**3** Select the **Desktop Experience** check box, click **Next**, and then click **Install**.<br>**4** Restart the computer. |
| Scanning using TWAIN or Windows® Image Acquisition (WIA) cannot be performed on a Windows Server® 2012 or Windows Server® 2012 R2 computer. | Install Desktop Experience on the computer.<br>To install Desktop Experience:<br>**1** Click **Server Manager** from the **Start** screen.<br>The **Server Manager** screen appears.<br>**2** Under **Manage**, click **Add Roles and Features**.<br>**Add Roles and Features Wizard** appears.<br>**3** Click **Next** to skip the **Before you begin** page.<br>**4** Make sure that **Role-based or feature-based installation** is selected, and then click **Next**.<br>**5** Make sure that **Select a server from the server pool** is selected, select the server under **Server Pool**, and then click **Next**.<br>**6** Click **Next** to skip the **Select server roles** page.<br>**7** Select the **Desktop Experience** check box under **User Interfaces and Infrastructure**, and then click **Next**.<br>**8** Click **Confirmation** from the list on the left.<br>**9** Select the **Restart the destination server automatically if required** check box, and then click **Install**.<br>**10** Restart the computer. |

# Digital Certificate Problems

| Problem | Action |
|---|---|
| The certificate import button is disabled. | SSL communication may be disabled. Create a self-signed certificate and enable SSL. |
| The certificate details button is disabled. | |

| Problem | Action |
|---|---|
| The certificate cannot be imported. | The time setting may be incorrect. Check validity period of the certificate as well as the time setting of the device. |
| | The certificate file may be incorrect. Make sure that the password is correct. |
| | Make sure that the file type is PKCS#7/#12 or x509CACert. |
| | Make sure that the attribute information such as key Usage or Extended key usage of the certificate to be imported is set correctly. |
| | The browser may be incorrect. Use Internet Explorer. |
| 016-404 is displayed when trying to use security settings that require certificates. | The certificate data stored in internal memory may be either deleted, corrupt, or may not be readable. Import the certificate and enable the security settings again. |
| A certificate cannot be set with "Certificate Details." | The validity period of the certificate may be expired. Make sure that the time setting of the printer is correct, and whether the validity period of the certificate has expired. |
| | The certificate path is invalid. The certificate chain (path validation) of the imported certificate may not be correctly validated. Make sure that all of the high-level certificates (Trusted/Intermediate) have been imported and are not deleted, and whether the validity period has expired. |
| Although a certificate was imported, it is not displayed when selecting with "Local Device." | The type of the certificate is incorrect. To import a certificate for use with the device (own device), import the secret key and a certificate of the PKCS#12 (p12/pfx) format as a pair. |
| Server validation is not operating correctly. | Although importing a root certificate (Trusted) to use for server authentication, an Intermediate certificate may be required when validating the path.<br>When executing a certificate file with the certification authority, create the certificate with a format including all paths and then import that certificate. |
| Digital Signature cannot be selected with the IPsec setting. | Either the certificate has not been imported or the certificate has not been associated for use with Digital Signature of IPsec. Refer to "Setting the Certificate in the IPsec Digital Signature Mode" to set a certificate of IPsec. |

# Wireless Problems

**NOTE:**

- Wireless network is available on Dell H625cdw and Dell H825cdw.

| Problem | Action |
|---|---|
| Cannot setup wireless connection. | Ensure that the Ethernet cable is disconnected from the printer. |
| | Ensure that `Wi-Fi` is set to `On`. See "Wi-Fi \| WPS." |
| | The firewall on your computer may be blocking communication with your printer. Disable the firewall on your computer. |
| | Ensure that your local wireless network is supported on 802.11b/g/n at 2.4 GH. |
| Cannot setup wireless connection with WPS (Wi-Fi Protected Setup). | Ensure that the security setting of the wireless LAN access point or router is WPA or WPA2. (WEP is not supported on WPS.) |
| Cannot setup wireless connection with the WPS-PBC (Wi-Fi Protected Setup-Push Button Configuration). | Press the WPS button on the wireless LAN access point or router within 2 minutes after starting the WPS operation on the printer. For details about the wireless LAN access point or router, refer to the manual supplied with the wireless LAN access point or router. |

| Problem | Action |
|---|---|
| Cannot setup wireless connection with WPS-PIN (Wi-Fi Protected Setup-Personal Identification Number). | Check if the PIN you have entered on the computer is correct. |

# Problems With Installed Optional 550-sheet feeder

If an optional 550-sheet feeder does not operate correctly following installation or stops working, perform the following:

- Turn off the printer, wait for 10 seconds, and then turn it on again. If this does not fix the problem, unplug the printer, and then check the connection between the optional 550-sheet feeder and the printer.
- Print the system settings report to see if the optional 550-sheet feeder is listed in the Installed Options list. If the optional 550-sheet feeder is not listed, re-install it. See "Report / List."
- Make sure that the optional 550-sheet feeder is selected in the print driver you are using.

The following table lists corrective actions for related problems. If the suggested corrective action does not correct the problem, contact Dell.

| Problem | Action |
|---|---|
| The optional 550-sheet feeder does not work correctly. | Make sure that the optional 550-sheet feeder is correctly installed on the printer. Re-install the feeder. See "Removing the Optional 550-Sheet Feeder," and refer to the installation instruction that comes with the optional 550-sheet feeder. |
| | Make sure that the print media is loaded correctly. See "Loading Print Media in Tray1 and the Optional 550-Sheet Feeder." |

# Wi-Fi Direct Problems

**NOTE:**

- Wi-Fi Direct is available on Dell H625cdw and Dell H825cdw.

| Problem | Action |
|---|---|
| The mobile device cannot discover the printer. | The printer may be connected to another mobile device via Wi-Fi Direct. Disconnect the printer and the mobile device. See "Disconnecting Wi-Fi Direct Network." |
| The printer cannot disconnect from the mobile device even when the procedure in "Disconnecting Wi-Fi Direct Network" has been performed. | The mobile device may be automatically reconnecting to the printer. Reset the passphrase for Wi-Fi Direct and disconnect the mobile device. See "Resetting the Passphrase." |
| The network mode of the printer cannot be set to **Ad-hoc** mode. | Make sure that **Wi-Fi Direct** is set to **Disable**. |
| **Wi-Fi Direct** cannot be set to **Enable**. | Make sure that the network mode is set to **Infrastructure** mode. |

# Scanner Driver/Printer Utility Problems

| Problem | Action |
|---|---|
| Unable to retrieve the Address Book data from the printer on the Address Book Editor. | Make sure that the USB or Ethernet cable is connected properly. |
| | Make sure that the printer is turned on. |
| | Make sure that the scanner driver is installed on your computer. The Address Book Editor retrieves the Address Book data via the scanner driver when the printer is connected using a USB cable. |
| The TWAIN driver cannot connect to the printer. | Make sure that the USB or Ethernet cable is connected properly. |
| | If using the network connection, check that IP address of the printer is set correctly. See "Scanning Using the TWAIN Driver." |
| | Check if the printer is turned on. If the printer is turned on, restart it by turning off the printer and then on again. |
| | If a scan program is running, close the program, restart the program, and then try scanning again. |
| The scanner driver has not been registered on your computer. | Install the scanner driver. If the scanner driver is installed, uninstall it and then re-install it again. |

# Other Problems

| Problem | Action |
|---|---|
| Condensation has occurred inside the printer. | This usually occurs within several hours after you heat the room in winter. This also occurs when the printer is operating in a location where relative humidity reaches 85% or more. Adjust the humidity or relocate the printer to an appropriate environment. |
| A problem has occurred when using Dell Document Hub.* | Visit **www.dell.com/dochub**. |

* Dell Document Hub is available on Dell H625cdw and Dell H825cdw.

# Contacting Service

When you call for printer service, be prepared to describe the problem you are experiencing or the error message that appears.

You need to know the model type and Service Tag number of your printer. See the label located inside the front cover of your printer and write down the Service Tag number. For details on the location of the Service Tag, see "Express Service Code and Service Tag."

# Appendix

Appendix 385

# Appendix

## Dell™ Technical Support Policy

Technician-assisted technical support requires the cooperation and participation of the customer in the troubleshooting process and provides for restoration of the operating system, software program and hardware drivers to the original default configuration as shipped from Dell, as well as the verification of appropriate functionality of the printer and all Dell-installed hardware. In addition to this technician assisted technical support, online technical support is available at Dell Support. Additional technical support options may be available for purchase.

Dell provides limited technical support for the printer and any Dell-installed software and peripherals. Support for third-party software and peripherals is provided by the original manufacturer, including those purchased and/or installed through Software & Peripherals (DellWare), ReadyWare, and Custom Factory Integration (CFI/DellPlus).

### Online Services

You can access Dell Support through the following websites:

- Product support and manuals

  **www.dell.com/support**

  **www.dell.com/support/manuals**

  **www.dell.com/printer**

## Warranty and Return Policy

Dell Inc. ("Dell") manufactures its hardware products from parts and components that are new or equivalent to new in accordance with industry-standard practices. For details about the Dell warranty for the printer, visit **www.dell.com/support**.

### Recycling Information

It is recommended that customers dispose of their used computer hardware, monitors, printers, and other peripherals in an environmentally sound manner. Potential methods include reuse of parts or whole products and recycling of products, components, and/or materials.

For specific information on Dell's worldwide recycling programs, visit **www.dell.com/recycle**.

## Contacting Dell

You can contact Dell electronically using the following addresses:

- World Wide Web

  **www.dell.com/contactdell**