FCC Test Report

Applicant	:	**Shenzhen Kingsun Enterprises Co., Ltd.**
Address	:	**25/F, CEC Information Building, Xinwen Rd., Shenzhen, Guangdong, 518034, China**
Product Name	:	**WIRELESS CHARGING ALARM CLOCK**
Report Date	:	**Apr. 16, 2024**

Shenzhen Anbotek Compliance Laboratory Limited

Contents

1. General Information 5
1.1. Client Information 5
1.2. Description of Device (EUT) 5
1.3. Auxiliary Equipment Used During Test 6
1.4. Description of Test Modes 6
1.5. Description Of Test Setup 7
1.6. Test Equipment List 8
1.7. Measurement Uncertainty 9
1.8. Description of Test Facility 9
1.9. Disclaimer 9
2. Summary of Test Results 10
3. Conducted Emission Test 11
3.1. Test Standard and Limit 11
3.2. Test Setup 11
3.3. Test Procedure 11
3.4. Test Data 11
4. Radiation Spurious Emission 14
4.1. Test Standard and Limit 14
4.2. Test Setup 14
4.3. Test Procedure 15
4.4. Test Data 15
5. Antenna Requirement 20
5.1. Test Standard and Requirement 20
5.2. Antenna Connected Construction 20
APPENDIX I -- TEST SETUP PHOTOGRAPH 21
APPENDIX II -- EXTERNAL PHOTOGRAPH 21
APPENDIX III -- INTERNAL PHOTOGRAPH 21

TEST REPORT

Applicant	:	Shenzhen Kingsun Enterprises Co., Ltd.
Manufacturer	:	Shenzhen Kingsun Enterprises Co., Ltd.
Product Name	:	WIRELESS CHARGING ALARM CLOCK
Test Model No.	:	OD-XYW2103-A
Reference Model No.	:	FAC210W, PDCLC
Trade Mark	:	FISHER
Rating(s)	:	Input: DC 5V/3A, 9V/3A(PD/QC 30W) Wireless output: 15W
Test Standard(s)	**:**	**FCC Part15 Subpart C, Paragraph 15.209**
Test Method(s)	**:**	**ANSI C63.10: 2020**

The device described above is tested by Shenzhen Anbotek Compliance Laboratory Limited to determine the maximum emission levels emanating from the device and the severe levels of the device can endure and its performance criterion. The measurement results are contained in this test report and Shenzhen Anbotek Compliance Laboratory Limited is assumed full of responsibility for the accuracy and completeness of these measurements. Also, this report shows that the EUT (Equipment Under Test) is technically compliant with the FCC Part 15 Subpart C requirements.

This report applies to above tested sample only and shall not be reproduced in part without written approval of Shenzhen Anbotek Compliance Laboratory Limited.

Date of receipt	Mar. 14, 2024
Date of Test	Mar. 14 ~ Mar. 29, 2024
Prepared by	Nianxiu Chen (Nianxiu Chen)
Approved & Authorized Signer	Edward pan (Edward Pan)

Revision History

Report Version	Description	Issued Date
R00	Original Issue.	Apr. 16, 2024

1. General Information

1.1. Client Information

Applicant	:	Shenzhen Kingsun Enterprises Co., Ltd.
Address	:	25/F, CEC Information Building, Xinwen Rd., Shenzhen, Guangdong, 518034, China
Manufacturer	:	Shenzhen Kingsun Enterprises Co., Ltd.
Address	:	25/F, CEC Information Building, Xinwen Rd., Shenzhen, Guangdong, 518034, China
Factory	:	Shenzhen Kingsun Enterprises Co., Ltd.
Address	:	25/F, CEC Information Building, Xinwen Rd., Shenzhen, Guangdong, 518034, China

1.2. Description of Device (EUT)

Product Name	:	WIRELESS CHARGING ALARM CLOCK
Test Model No.	:	OD-XYW2103-A
Reference Model No.	:	FAC210W, PDCLC (Note: All samples are the same except the model number, so we prepare "OD-XYW2103-A" for test only.)
Trade Mark	:	FISHER
Test Power Supply	:	AC 120V, 60Hz for Adapter
Test Sample No.	:	1-2-1(Normal Sample), 1-2-2(Engineering Sample)
Adapter	:	N/A
RF Specification		
Operation Frequency	:	110.1-205kHz
Modulation Type	:	FSK
Antenna Type	:	Inductive loop coil Antenna
Antenna Gain(Peak)	:	0 dBi
Remark: 1) All of the RF specification are provided by customer. 2) For a more detailed features description, please refer to the manufacturer's specifications or the User's Manual.		

1.3. Auxiliary Equipment Used During Test

Description	Rating(s)
Adapter	Model: MDY-11-EX Input: 100-240V~0.7A,50-60Hz USB-A output: 5V⎓ 3A, 9V⎓ 3A,12V⎓ 2.25A, 20V⎓ 1.35A, 11V⎓ 3A
Mobile Phone	iPhone 12

1.4. Description of Test Modes

To investigate the maximum EMI emission characteristics generates from EUT, the test system was pre-scanning tested base on the consideration of following EUT operation mode or test configuration mode which possible have effect on EMI emission level. Each of these EUT operation mode(s) or test configuration mode(s) mentioned above was evaluated respectively.

Pretest Mode	Description
Mode 1	Charging & Wireless Charging Mode

For Conducted Emission	
Final Test Mode	Description
Mode 1	Charging & Wireless Charging Mode

For Radiated Emission	
Final Test Mode	Description
Mode 1	Charging & Wireless Charging Mode

Note:

(1) Test channel is 0.1289MHz.

(2) All the situation(full load, half load and empty load) has been tested,only the worst situation (full load 15W) was recorded in the report.

1.5. Description Of Test Setup

CE

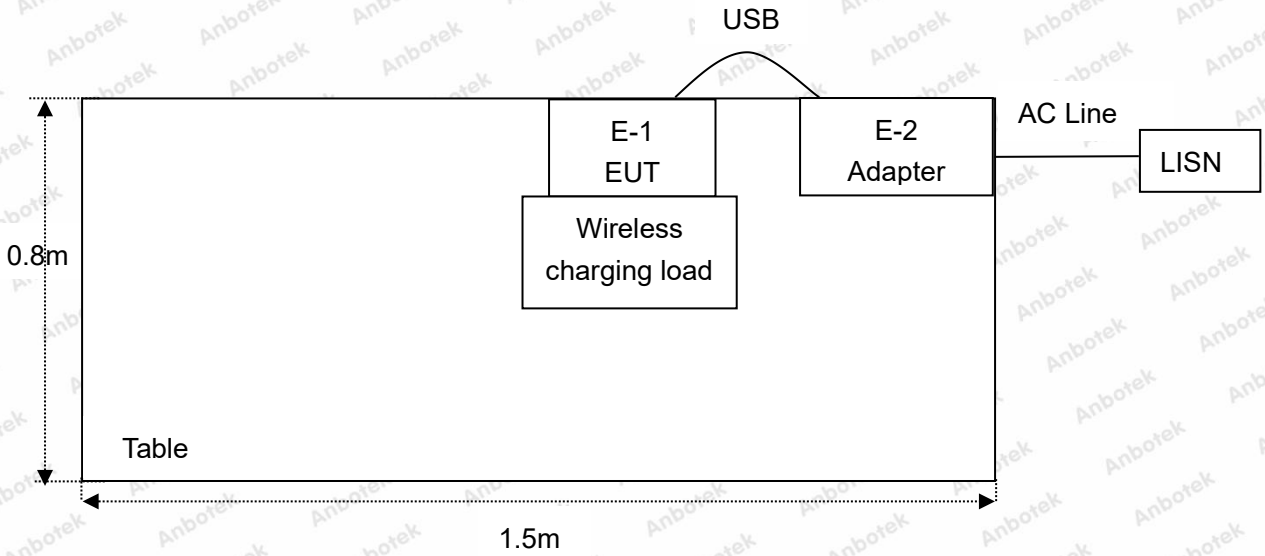

RE

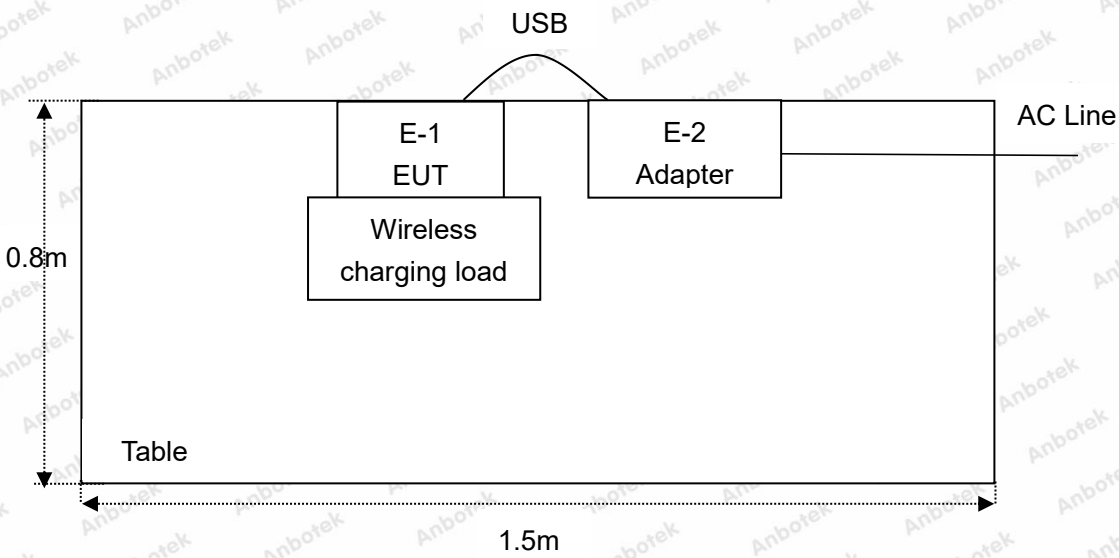

1.6. Test Equipment List

Item	Equipment	Manufacturer	Model No.	Serial No.	Last Cal.	Cal. Interval
1.	L.I.S.N. Artificial Mains Network	Rohde & Schwarz	ENV216	100055	Oct. 12, 2023	1 Year
2.	Three Phase V-type Artificial Power Network	CYBERTEK	EM5040DT	E215040DT001	Jul. 05, 2023	1 Year
3.	EMI Test Receiver	Rohde & Schwarz	ESCI	100627	Oct. 12, 2023	1 Year
4.	EMI Test Receiver	Rohde & Schwarz	ESR26	101481	Oct. 12, 2023	1 Year
5.	MXA Spectrum Analysis	Agilent	N9020A	MY51170037	Oct. 12, 2023	1 Year
6.	EMI Preamplifier	SKET Electronic	LNPA-0118G-45	SKET-PA-002	Oct. 12, 2023	1 Year
7.	Double Ridged Horn Antenna	SCHWARZBECK	BBHA 9120D	02555	Oct. 16, 2022	3 Year
8.	Bilog Broadband Antenna	Schwarzbeck	VULB9163	345	Oct. 23, 2022	3 Year
9.	Loop Antenna	Schwarzbeck	FMZB1519B	00053	Oct. 12, 2023	1 Year
10.	Horn Antenna	A-INFO	LB-180400-KF	J211060628	Oct. 12, 2023	1 Year
11.	Pre-amplifier	SONOMA	310N	186860	Oct. 12, 2023	1 Year
12.	EMI Test Software EZ-EMC	SHURPLE	N/A	N/A	N/A	N/A
13.	MXA Spectrum Analysis	KEYSIGHT	N9020A	MY53280032	Oct. 12, 2023	1 Year
14.	MXG RF Vector Signal Generator	Agilent	N5182A	MY48180656	Oct. 12, 2023	1 Year
15.	Signal Generator	Agilent	E4421B	MY41000743	Oct. 12, 2023	1 Year
16.	DC Power Supply	IVYTECH	IV3605	1804D360510	Oct. 20, 2023	1 Year
17.	Constant Temperature Humidity Chamber	ZHONGJIAN	ZJ-KHWS80B	N/A	Oct. 16, 2023	1 Year
18.	Spectrum Analyzer	Rohde & Schwarz	FSV40-N	101792	May. 26, 2023	1 Year

1.7. Measurement Uncertainty

Parameter	Uncertainty
Conducted emissions (AMN 150kHz~30MHz)	3.8dB
Radiated spurious emissions (Below 30MHz)	3.53dB
Radiated spurious emissions (30MHz~1GHz)	Horizontal: 3.92dB; Vertical: 4.52dB
The measurement uncertainty and decision risk evaluated according to AB/WI-RF-F-032. This uncertainty represents an expanded uncertainty expressed at approximately the 95% confidence level using a coverage factor of k=2.	

1.8. Description of Test Facility

The test facility is recognized, certified, or accredited by the following organizations:

FCC-Registration No.: 434132

Shenzhen Anbotek Compliance Laboratory Limited, EMC Laboratory has been registered and fully described in a report filed with the (FCC) Federal Communications Commission. The acceptance letter from the FCC is maintained in our files. Registration No. 434132.

ISED-Registration No.: 8058A

Shenzhen Anbotek Compliance Laboratory Limited, EMC Laboratory has been registered and fully described in a report filed with the (ISED) Innovation, Science and Economic Development Canada. The acceptance letter from the ISED is maintained in our files. Registration 8058A.

Test Location

Shenzhen Anbotek Compliance Laboratory Limited.
1/F, Building D, Sogood Science and Technology Park, Sanwei community, Hangcheng Street, Bao'an District, Shenzhen, Guangdong, China.

1.9. Disclaimer

1. The test report is invalid if not marked with the signatures of the persons responsible for preparing and approving the test report.
2. The test report is invalid if there is any evidence and/or falsification.
3. The results documented in this report apply only to the tested sample, under the conditions and modes of operation as described herein.
4. This document may not be altered or revised in any way unless done so by Anbotek and all revisions are duly noted in the revisions section.
5. Content of the test report, in part or in full, cannot be used for publicity and/or promotional purposes without prior written approval from the laboratory.
6. The authenticity of the information provided by the customer is the responsibility of the customer and the laboratory is not responsible for its authenticity.

The laboratory is only responsible for the data released by the laboratory, except for the part provided by the applicant.

2. Summary of Test Results

Standard Section	Test Item	Result
15.203	Antenna Requirement	PASS
15.207	Conducted Emission Test	PASS
15.205/15.209	Spurious Emission	PASS

3. Conducted Emission Test

3.1. Test Standard and Limit

Test Standard	FCC Part15 Section 15.207		
Test Limit	Frequency	Maximum RF Line Voltage (dBuV)	
		Quasi-peak Level	Average Level
	150kHz~500kHz	66 ~ 56 *	56 ~ 46 *
	500kHz~5MHz	56	46
	5MHz~30MHz	60	50
Remark: (1) *Decreasing linearly with logarithm of the frequency. (2) The lower limit shall apply at the transition frequency.			

3.2. Test Setup

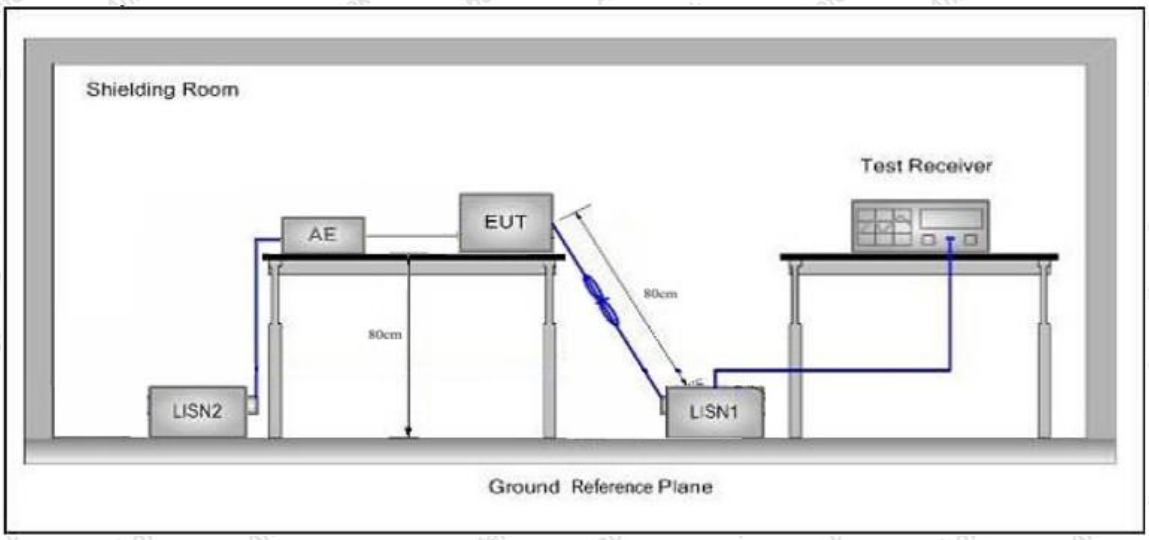

3.3. Test Procedure

The EUT system is connected to the power mains through a line impedance stabilization network (L.I.S.N.). This provides a 50ohm coupling impedance for the EUT system. Please refer the block diagram of the test setup and photographs. Both sides of AC line are checked to find out the maximum conducted emission. In order to find the maximum emission levels, the relative positions of equipment and all of the interface cables shall be changed according to FCC ANSI C63.10: 2020 on Conducted Emission Measurement.

The bandwidth of test receiver (ESCI) set at 9kHz.

The frequency range from 150kHz to 30MHz is checked.

3.4. Test Data

AC conducted emission pre-test at both at AC 120V/60Hz and AC 240V/60Hz modes, recorded worst case AC 120V/60Hz.

Please to see the following pages.

Conducted Emission Test Data

Test Site: 1# Shielded Room
Operating Condition: Mode 1
Test Specification: AC 120V, 60Hz for Adapter
Comment: Live Line
Temp.(℃)/Hum.(%RH): 21.4℃/52%RH

No.	Freq. (MHz)	Reading (dBuV)	Factor (dB/m)	Result (dBuV/m)	Limit (dBuV/m)	Over Limit (dB)	Detector	Height (cm)	degree (deg)	Remark
1	55.0274	42.44	-17.63	24.81	40.00	-15.19	QP			
2	72.0843	50.60	-22.15	28.45	40.00	-11.55	QP			
3	166.0680	58.98	-23.77	35.21	43.50	-8.29	QP			
4	336.0352	44.51	-16.32	28.19	46.00	-17.81	QP			
5	431.0316	42.31	-15.73	26.58	46.00	-19.42	QP			
6	909.6667	37.56	-6.11	31.45	46.00	-14.55	QP			

Conducted Emission Test Data

Test Site: 1# Shielded Room
Operating Condition: Mode 1
Test Specification: AC 120V, 60Hz for Adapter
Comment: Neutral Line
Temp.(℃)/Hum.(%RH): 21.4℃/52%RH

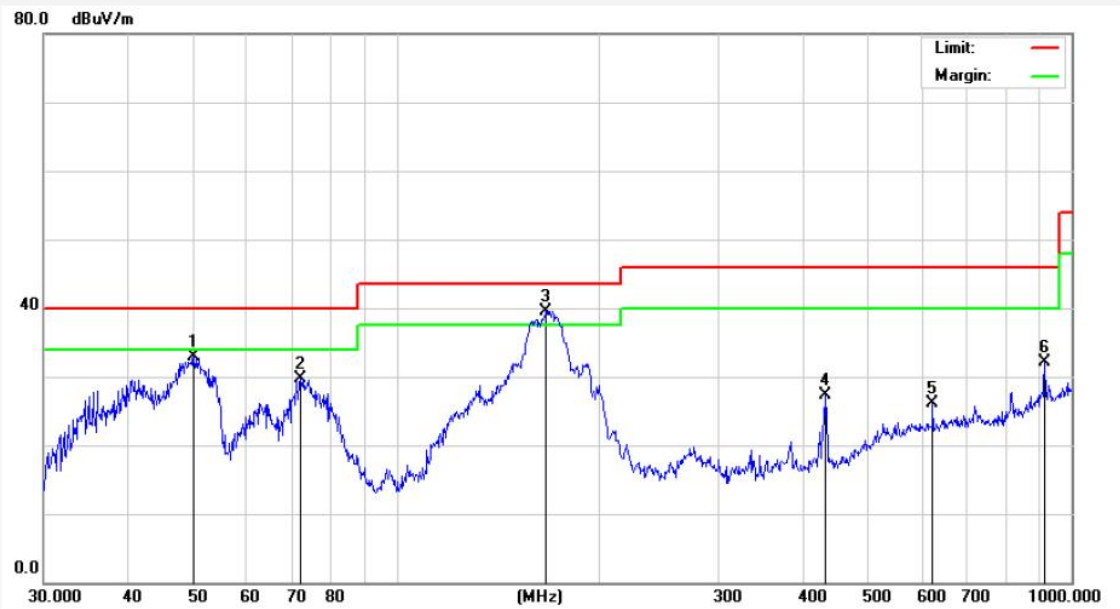

No.	Freq. (MHz)	Reading (dBuV)	Factor (dB/m)	Result (dBuV/m)	Limit (dBuV/m)	Over Limit (dB)	Detector	Height (cm)	degree (deg)	Remark
1	50.0566	48.67	-15.79	32.88	40.00	-7.12	QP			
2	72.0843	49.61	-19.94	29.67	40.00	-10.33	QP			
3	166.6514	60.90	-21.30	39.60	43.50	-3.90	QP			
4	431.0316	41.24	-13.97	27.27	46.00	-18.73	QP			
5	622.8900	36.78	-10.58	26.20	46.00	-19.80	QP			
6	912.8620	38.24	-6.08	32.16	46.00	-13.84	QP			

4. Radiation Spurious Emission

4.1. Test Standard and Limit

Test Standard	FCC Part15 C Section 15.209 and 15.205				
Test Limit	Frequency (MHz)	Field strength (microvolt/meter)	Limit (dBuV/m)	Remark	Measurement distance (m)
	0.009MHz~0.490MHz	2400/F(kHz)	-	-	300
	0.490MHz-1.705MHz	24000/F(kHz)	-	-	30
	1.705MHz-30MHz	30	-	-	30
	30MHz~88MHz	100	40.0	Quasi-peak	3
	88MHz~216MHz	150	43.5	Quasi-peak	3
	216MHz~960MHz	200	46.0	Quasi-peak	3
	960MHz~1000MHz	500	54.0	Quasi-peak	3
	Above 1000MHz	500	54.0	Average	3
		-	74.0	Peak	3

Remark:
(1)The lower limit shall apply at the transition frequency.
(2) 15.35(b), Unless otherwise specified, the limit on peak radio frequency emissions is 20dB above the maximum permitted average emission limit applicable to the equipment under test. This peak limit applies to the total peak emission level radiated by the device.

4.2. Test Setup

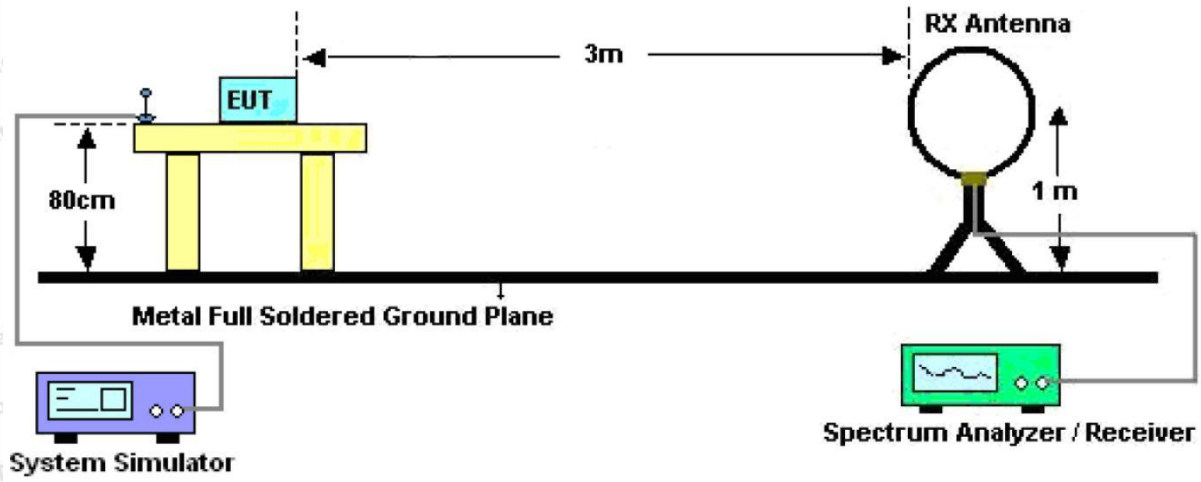

Figure 1. Below 30MHz

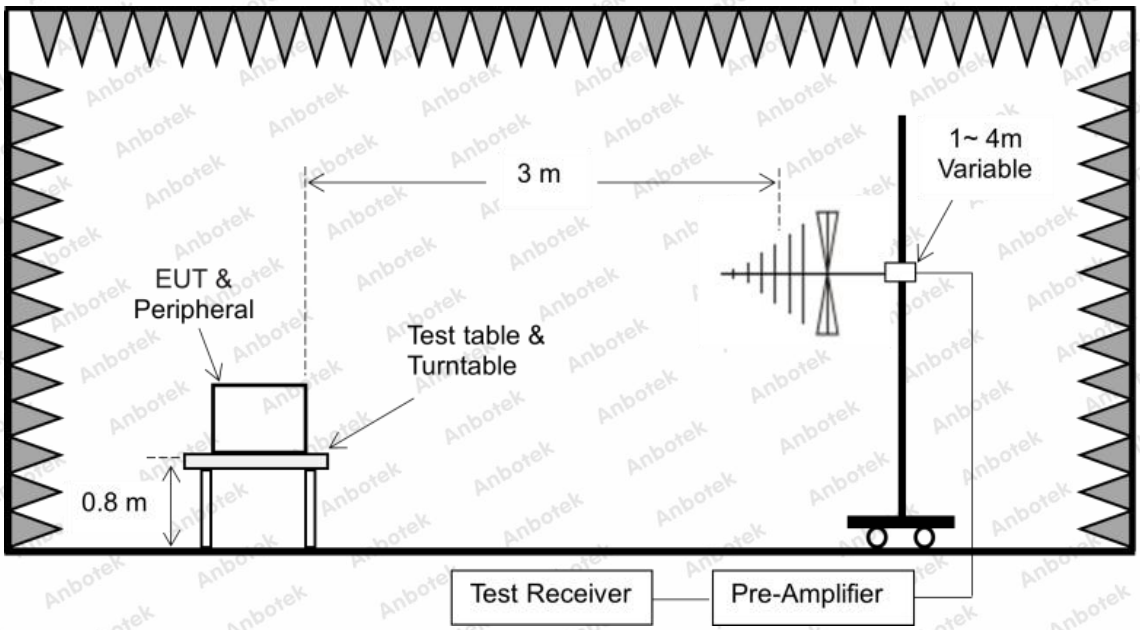

Figure 2. 30MHz to 1GHz

4.3. Test Procedure

For below 1GHz: The EUT is placed on a turntable, which is 0.8m above the ground plane.
The turn table can rotate 360 degrees to determine the position of the maximum emission level. The EUT is set 3 meters away from the receiving antenna which is mounted on a antenna tower. The antenna can be moved up and down from 1 to 4 meters to find out the maximum emission level. Rotated the EUT through three orthogonal axes to determine the maximum emissions, both horizontal and vertical polarization of the antenna are set on test. The EUT is tested in 9*6*6 Chamber. The device is evaluated in xyz orientation.

For 9kHz to 150kHz, Set the spectrum analyzer as:
RBW = 200Hz, VBW =1kHz, Detector= Quasi-Peak, Trace mode= Max hold, Sweep- auto couple.

For 150kHz to 30MHz, Set the spectrum analyzer as:
RBW = 9KHz, VBW =30kHz, Detector= Quasi-Peak, Trace mode= Max hold, Sweep- auto couple.

For 30MHz to 1000MHz, Set the spectrum analyzer as:
RBW = 100kHz, VBW =300kHz, Detector= Quasi-Peak, Trace mode= Max hold, Sweep- auto couple.

4.4. Test Data

PASS

During the test, Pre-scan all kind of the place mode (X-axis, Y-axis, Z-axis), and found the X-axis is the worst case.

Test Results (Between 9KHz – 150KHz)

Test Mode:	Mode 1
Distance:	3m
Power Source:	AC 120V, 60Hz for Adapter
Temp.(℃)/Hum.(%RH):	23.5℃/49%RH

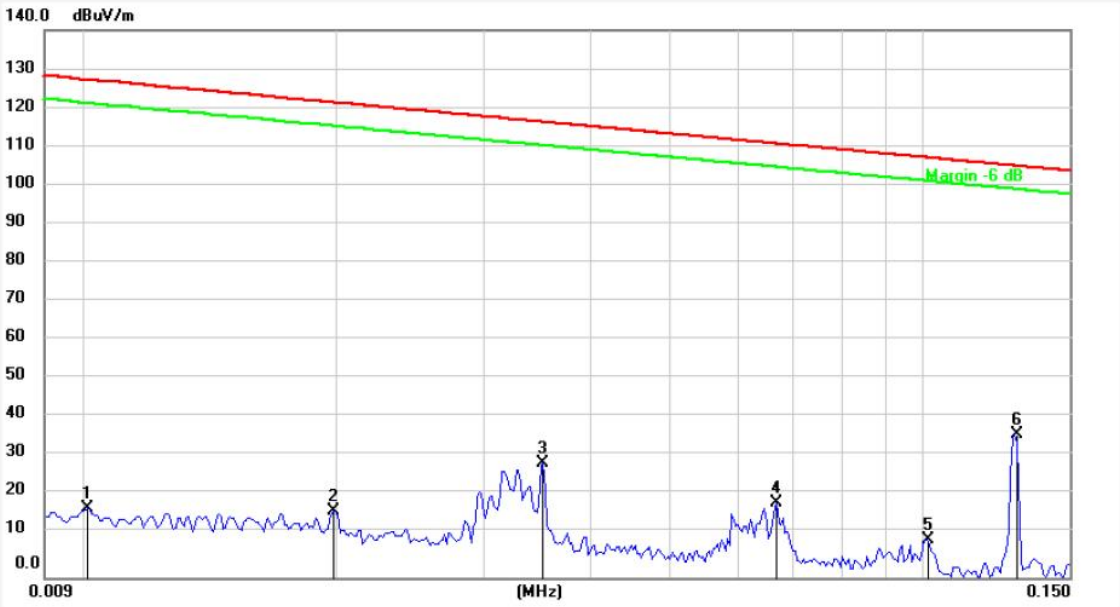

No.	Freq. (MHz)	Reading (dBuV)	Factor ()	Result (dBuV/m)	Limit (dBuV/m)	Over Limit (dB)	Detector	Height (cm)	degree (deg)	Remark
1	0.0101	-2.46	20.09	17.63	127.31	-109.68	QP			
2	0.0199	-3.42	20.29	16.87	121.46	-104.59	QP			
3	0.0353	8.81	20.47	29.28	116.51	-87.23	QP			
4	0.0670	-1.43	20.38	18.95	110.98	-92.03	QP			
5	0.1012	-10.52	20.29	9.77	107.42	-97.65	QP			
6	0.1289	16.36	20.34	36.70	105.33	-68.63	QP			

Test Results (Between 0.15MHz – 30MHz)

Test Mode:	Mode 1
Distance:	3m
Power Source:	AC 120V, 60Hz for Adapter
Temp.(℃)/Hum.(%RH):	23.5℃/49%RH

No.	Freq. (MHz)	Reading (dBuV)	Factor ()	Result (dBuV/m)	Limit (dBuV/m)	Over Limit (dB)	Detector	Height (cm)	degree (deg)	Remark
1	0.2548	6.39	20.30	26.69	99.44	-72.75	QP			
2	0.4863	11.87	20.27	32.14	93.87	-61.73	QP			
3	1.1595	1.40	20.26	21.66	66.34	-44.68	QP			
4	2.5945	-8.10	20.29	12.19	69.50	-57.31	QP			
5	8.5917	-12.63	20.51	7.88	69.50	-61.62	QP			
6	15.7179	-11.21	20.55	9.34	69.50	-60.16	QP			

Remark: According to FCC PART 15.209 (d), the emission limits for the frequency bands 9–90 kHz, 110–490 kHz and above 1000 MHz, Radiated emission limits in these three bands are based on measurements employing an average detector.

Test Results (Between 30MHz –1000 MHz)

Test Mode: Mode 1

Distance: 3m

Power Source: AC 120V, 60Hz for Adapter

Polarization: Horizontal

Temp.(℃)/Hum.(%RH): 25.0℃/55%RH

No.	Freq. (MHz)	Reading (dBuV)	Factor (dB/m)	Result (dBuV/m)	Limit (dBuV/m)	Over Limit (dB)	Detector	Height (cm)	degree (deg)	Remark
1	55.0274	42.44	-17.63	24.81	40.00	-15.19	QP			
2	72.0843	50.60	-22.15	28.45	40.00	-11.55	QP			
3	166.0680	58.98	-23.77	35.21	43.50	-8.29	QP			
4	336.0352	44.51	-16.32	28.19	46.00	-17.81	QP			
5	431.0316	42.31	-15.73	26.58	46.00	-19.42	QP			
6	909.6667	37.56	-6.11	31.45	46.00	-14.55	QP			

Test Mode: Mode 1
Distance: 3m
Power Source: AC 120V, 60Hz for Adapter
Polarization: Vertical
Temp.(℃)/Hum.(%RH): 25.0℃/55%RH

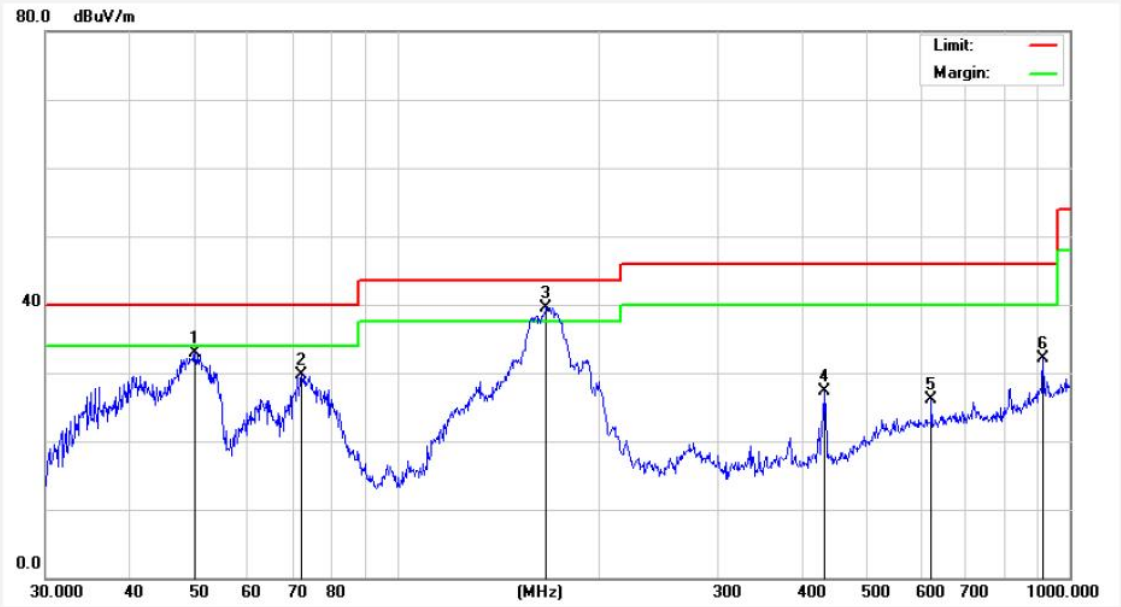

No.	Freq. (MHz)	Reading (dBuV)	Factor (dB/m)	Result (dBuV/m)	Limit (dBuV/m)	Over Limit (dB)	Detector	Height (cm)	degree (deg)	Remark
1	50.0566	48.67	-15.79	32.88	40.00	-7.12	QP			
2	72.0843	49.61	-19.94	29.67	40.00	-10.33	QP			
3	166.6514	60.90	-21.30	39.60	43.50	-3.90	QP			
4	431.0316	41.24	-13.97	27.27	46.00	-18.73	QP			
5	622.8900	36.78	-10.58	26.20	46.00	-19.80	QP			
6	912.8620	38.24	-6.08	32.16	46.00	-13.84	QP			

5. Antenna Requirement

5.1. Test Standard and Requirement

Test Standard	FCC Part15 Section 15.203
Requirement	1) 15.203 requirement: An intentional radiator shall be designed to ensure that no antenna other than that furnished by the responsible party shall be used with the device. The use of a permanently attached antenna or of an antenna that uses a unique coupling to the intentional radiator, the manufacturer may design the unit so that a broken antenna can be replaced by the user, but the use of a standard antenna jack or electrical connector is prohibited.

5.2. Antenna Connected Construction

The antenna is a Inductive loop coil Antenna which permanently attached, and the best case gain of the antenna is 0 dBi. It complies with the standard requirement.

APPENDIX I -- TEST SETUP PHOTOGRAPH

Please refer to separated files Appendix I -- Test Setup Photograph_WPT

APPENDIX II -- EXTERNAL PHOTOGRAPH

Please refer to separated files Appendix II -- External Photograph

APPENDIX III -- INTERNAL PHOTOGRAPH

Please refer to separated files Appendix III -- Internal Photograph

---------- End of Report ----------