PLAY MUSIC FROM BLUETOOTH DEVICES

1. Make sure the Bluetooth connection between the speaker and the Bluetooth enabled device is active *(see Bluetooth pairing & linking operation)*.

   Press the **SCAN ⏯** button to pause the music. Press the **SCAN ⏯** button again to resume play.
2. Press the **TUNE+** button to skip forward to the next track and the **TUNE-** button to skip backward to the previous track.
3. Press the **VOL+/VOL-** button on the speaker or the **[+/-]** button on the remote control to adjust volume level.

INSTRUCTIONS FOR WIRELESS MICROPHONE:

1. Load 2 of AA batteries and place them at the correspondingposition of wireless microphone. Close the battery cover.
2. Plug in the tower speaker, press the [⏻] button on the top panel or on the remote control, and switch on wireless microphone. The karaoke is now available to sing at any modes, the two knobs on the backside of the tower speaker can be used to adjust the volume and reverberation of the microphone.
3. When the microphone does not have any sound, please check if the batteries are loaded in the microphone or if the batteries are placed incorrectly. The switch should be at "on" position. Confirm if the MIC_VOL at the backside of tower speaker is on.

TROUBLESHOOTING

No sound is coming from the Tower Speaker.

- The volume level may be too low. Try increasing the volume by pressing the **VOL+** button on the speaker or the **[+]** button on the remote control.
- The connected device might not be in playback mode.
- The sound output of the connected device may be too low. Increase the volume of the connected Bluetooth device.

The volume level for the Tower Speaker is too high.

- Try reducing the volume level by pressing the **VOL-** button on the speaker or the **[-]** button on the remote control.
- The sound output of the connected device might be too high. Try reducing the volume of the connected Bluetooth device.

The Bluetooth reception is not working.

Make sure no other devices are connected to the Tower Speaker and try the connection again. If a device is connected to the speaker, unpair it before connecting your new device. Do this using your device's Bluetooth menu.

NOTE: Use of this unit near fluorescent lighting may cause interference with the remote. If the unit is displaying erratic behavior, move it away from any fluorescent lighting, as that may be the cause.

LOCATIONS OF CONTROLS

Main Unit

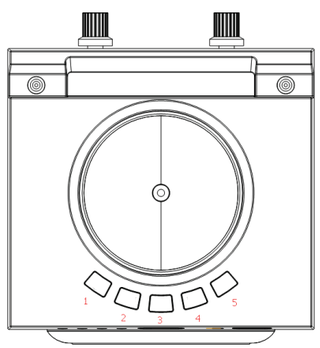

1. [⏻] button: **POWER ON**- Quick press (Power Switch must be set to ON) **POWER OFF**- Quick press.
2. **MODE/LIGHT** button: **Quick press**: AUX IN / Bluetooth / FM **Press & Hold:** DISCO Light on/OFF.
3. **VOL- ⏮** button: **Quick press:** skip to previous track/ Tune down through radio stations in FM mode. **Press & Hold:** decrease volume.
4. **SCAN ⏯**button: **Quick press:** play/pause. **Press & Hold:** FM Scan.
5. **VOL+ ⏭** button: **Quick press:** skip to next track/ Tune up through radio stations in FM mode. **Press & Hold:** increase volume.

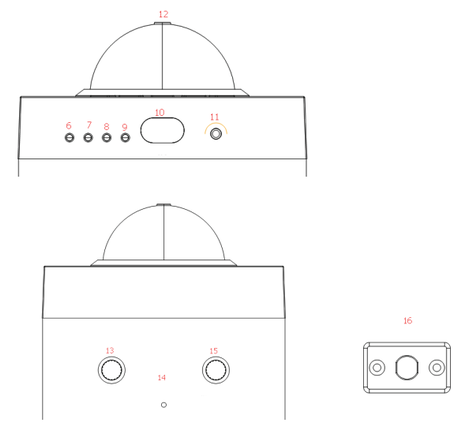

6. POWER LED
7. Bluetooth LED
8. AUX LED
9. FM LED
10. IR remote sensor
11. AUX INPUT port
12. DISCO Light
13. MIC Volume knob
14. FM ANT
15. MIC ECHO knob
16. DC5V IN port

REMOTE CONTROL

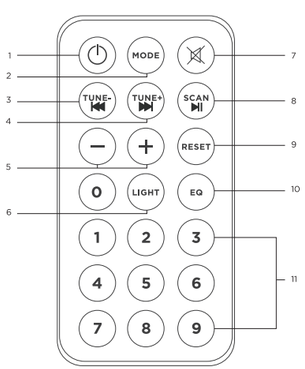

1. [⏻] button: **POWER ON**- Quick press (Power Switch must be set to ON) **POWER OFF-** Quick press.
2. **MODE** button: Mode conversion. AUX IN / Bluetooth / FM
3. **TUNE- ⏮** button: Previous track/Tune down through radio stations in FM mode.
4. **TUNE+ ⏭** button: Next track/Tune up through radio stations in FM mode.
5. **[+/-]** buttons: Increase/Decrease the volume.
6. **LIGHT** button: turn ON/OFF disco lights.
7. button: Mute (turn off/on sound).
8. **SCAN ⏯** button: Play / Pause / FM Scan.
9. **RESET** button: Volume recovery system default settings.
10. **EQ** button: Switch sound settings.
11. Numeric buttons.

NOTE: The battery for the remote control (1 CR205 lithium battery) is included. To Replace the battery, push and slide out the battery door in the remote control. Replace the battery with a new CR205 battery with the polarity"+" facing up. Slide and close the door.

SPECIFICATIONS

1. **Model No.:** SP3214
2. **Bluetooth**: V2.1+EDR
3. **Output power**: 2 x 5W
4. **Frequency**: 150Hz–20KHz
5. **Working distance**: Up to 30ft (Distance may vary)
6. **Charging type**: Power Adapter

This device complies with Part 15 of the FCC Rules. Operation is subject to the following two conditions: (1) This device may not cause harmful interference, and (2) this device must accept any interference received, including interference that may cause undesired operation.

Caution: Changes or modifications not expressly approved by the party responsible for compliance could void the user's authority to operate the equipment.

NOTE: This equipment has been tested and found to comply with the limits for a Class B digital device, pursuant to part 15 of the FCC Rules. These limits are designed to provide reasonable protection against harmful interference in a residential installation. This equipment generates uses and can radiate radio frequency energy and, if not installed and used in accordance with the instructions, may cause harmful interference to radio communications. However, there is no guarantee that interference will not occur in a particular installation. If this equipment does cause harmful interference to radio or television reception, which can be determined by turning the equipment off and on, the user is encouraged to try to correct the interference by one or more of the following measures:

--Reorient or relocate the receiving antenna.

--Increase the separation between the equipment and receiver.

--Connect the equipment into an outlet on a circuit different from that to which the receiver is connected.

--Consult the dealer or an experienced radio/TV technician for help.

Front Cover

MEASUREMENTS

388.36 mm

194.18mm

80.742 mm

162.142 mm

⚠ **Warning:**
Please read these safety warnings and cautions carefully to ensure your personal safety and prevent property damage.

Fire and Electric Shock Hazard

- Do not drop, disassemble, open, crush, bend, deform, puncture, shred, microwave, incinerate, paint, or insert foreign objects in to the speaker. Such actions could result in electric shock.
- Do not expose your speaker to extremely high or low temperatures it can cause malfunction.
- Do not leave your speaker in direct sunlight for extended periods of time.
- Do not leave your speaker near open flames such as cooking burners, candles, or fireplaces.
- Do not block any ventilation openings.

Fall Hazard

- Do not place the speaker on high surfaces such as shelves. During music playback the speaker may move which could cause the speaker to shift and fall off of the edge.

Warning:
To reduce the risk of electric shock, do not remove cover (or back). Refer servicing to qualified service personnel.

⚠ **CAUTION:**

- Do not use abrasive cleaners to clean your speaker. It could cause scratches and damage.
- Do not bring your speaker in to contact with any sharp objects. It could cause scratches and damage.
- Do not insert anything into your speaker unless otherwise specified in the user instructions. This may damage the units internal components .
- Do not attempt to repair, modify, or disassemble your speaker yourself, it does not contain any user-serviceable components.
- Do not attempt to replace your speaker battery, it is built-in and is not changeable.
- Use only the manufacturer supplied charger to charge your speaker. Other chargers may look similar, but using them could result in electric shock and could damage your speaker.
- Observe all signs and displays that require an electrical device or RF radio product to be switched off in designated areas.
- Turn off your speaker prior to boarding an aircraft. Do not use the speaker inside an aircraft unless allowed by your airline.
- Dispose of the speaker and its battery in accordance with local regulations. Do not dispose of the battery with regular household waste.

Limitation of Liability
In no event, under any cause of action of theory of liability, shall Sicura Media Inc., its distributors or suppliers be liable to you or any third party for indirect, incidental, consequential, special, exemplary or punitive damages, of any and all nature whatsoever, arising out of use of or inability to use a product. This includes without limitation, property damage, loss of value of the product or any third party products that are used in or with the iWave products, even if the iWave product has been advised of the possibility of such damages that one may encounter. Without limiting the foregoing, you understand and agree that iWave has no liability for any damages or destruction to the consumer electronics devices or other personal property that are Contained inside or outside of the iWave products. This includes without limitation, laptops, Cellular phones, or other hand-held devices, or any loss of data contained in the foreign device. Notwithstanding any damages that you might incur for any reason whatsoever (including,without limitation, all damages referenced herein and all direct or general damages in contract, tort (including negligence) or otherwise), the entire aggregate liability of iWave and any of it distributors and/ or suppliers shall be limited to the amount actually paid by you for the iWave product giving rise to liability. Some states and/or jurisdictions do not allow the exclusion or limitation of incidental or consequential damages, so the above limitations or exclusions may not apply to you. The limitations of liability set forth above shall apply to the maximum extent permitted under the applicable law.

Bluetooth FC CE

iWave and the iWave logo are trademarks of iWave Sicura Media, Inc. The Bluetooth® word mark and logos are registered trademarks owned by Bluetooth SIG, Inc. and any use of such marks by is under license. All other trademarks and trade names are those of their respective owners. ©2016

New York NY 10018
Support@argentosc.com
www.argentosc.com
Made in China exclusively for iWave Sicura Media, Inc.

iWave®

INFO

WIRELESS KARAOKE TOWER SPEAKER

WITH DISCO BALL

IMPORTANT: PLEASE READ BEFORE USING THIS PRODUCT

SETUP

1. Connect the wooden base to the main body using the supplied screws.
2. Connect the DC adapter on the back of the unit into an outlet.

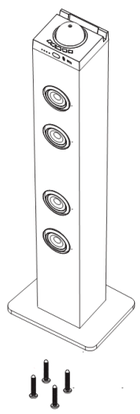

IN THE BOX

- User manual
- Tower Speaker
- Base stand
- 3.5mm Auxiliary cord
- 4 screws
- Remote control

BASIC OPERATION

1. Flip Main Power Switch on the rear of the unit to the **ON** position.
2. Press the [⏻] button to turn **ON** the unit. A source indicator will light up **GREEN** when the unit is **ON**; the light will go out when the unit is **OFF**.
3. Press the **MODE** button on the speaker or on the remote control repeatedly to switch the playback source; the source indicator will light up **GREEN** accordingly.
4. Press the **VOL+/VOL-** buttons on the speaker or the **[+/-]** buttons on the remote control to adjust volume level.
5. Press the **EQ** button to set EQ mode as desired.
6. Press the [⊗] button on the remote control to turn off the sound. Press it again to turn the sound back on.

RADIO OPERATION

1. Press the [⏻] button to turn **ON** the unit.
2. Press the **MODE** button on the speaker or the remote control repeatedly until the **FM** indicator turns **GREEN.**
3. Press the **TUNE-** or **TUNE+** button on the speaker or the remote control to tune down/up through radio stations.
4. To scan to the next available station, press and hold the **TUNE-** or **TUNE+** button for one full second and release quickly.
5. Press the **SCAN** button on the remote control to search all available stations. Press it again to stop on a station.
6. *To store preset radio stations in FM Mode:* The numeric keys are FM channel numbers, when you press scan on the speaker or remote control, FM will search and storage channels automatically, then you can press any numeric keys on the remote control. FM will automatically switch to the designated channel number. **For example, if you want to listen to channel No. 10, press 1 then press 0 on the remote control.**

AUXILIARY PLAYBACK

1. Plug one end of the included 3.5 mm Auxiliary cord to the headphone port on your device.
2. Plug the other end of the 3.5 mm Auxiliary cord into the AUX port on the top of the speaker.
3. Press the [⏻] button to turn ON the unit.
4. Press the **MODE** button on the speaker or the **MODE** button on the remote control repeatedly until the AUX indicator turns GREEN.
5. Use your device's audio controls for music playback.

   NOTE: You cannot use the speaker controls for audio playback while the device is plugged into the AUX jack.

BLUETOOTH PAIRING & LINKING OPERATION:

1. Keep your Tower Speaker and Bluetooth enabled device within 3 feet of each other during the pairing process.
2. Press and hold the [⏻] button to turn **ON** the unit.
3. Press the **MODE** button on the speaker or the **MODE** button on the remote control repeatedly until the Bluetooth indicator flashes **GREEN**. The Bluetooth indicator will remain **GREEN** when pairing is successful.

   ***NOTE*: FLASHING GREEN:** pairing Mode.
   SOLID GREEN: You are connected to the Bluetooth device.

   If you would like to use a new Bluetooth device with the speaker, you must unpair the speaker from your device using your device's Bluetooth menu. If you power off the speaker when it is unpaired, the next time you turn the Bluetooth indicator will flash Green which means it is in pairing mode.
4. Set your mobile phone or other Bluetooth enabled device to search for Bluetooth devices.
5. When the device finds the Tower Speaker, confirm by selecting **SP3214** from the list.
6. Select **"Pair"** to connect the Tower speaker to your Bluetooth enabled device.

   Enter pass code **"0"** on the device.
7. Your Bluetooth enabled device will confirm that the pairing was completed, and prompt you to accept the connection. Please respond YES to connect the Tower Speaker to your Bluetooth enabled device.
8. When attempting to reconnect the Tower Speaker to your Bluetooth enabled device, you may see a message prompting you to accept the connection to the SP3214 speaker with the option to not ask this again. Please accept the connection, and if you select "Don't ask this again" your Bluetooth device will automatically accept future connection requests from your Tower Speaker.