# TEST REPORT

**Product Name : Queue Wireless Calling System**
**Model Number : TD157, T116A, TD101, TD172, TD173, TD174, TD175, TD177, TD178, TD179, TD180, TD181, TD182**
**FCC ID : 2AAR8TD157A**

Prepared for : HENAN ESHOW ELECTRONIC COMMERCE CO., LTD
Address : Room 722, Sanjiang Building, No.170 Nanyang Road, Huiji District, Zhengzhou, Henan, China

Prepared by : EMTEK (SHENZHEN) CO., LTD.
Address : Building 69, Majialong Industry Zone, Nanshan District, Shenzhen, Guangdong, China

Tel: (0755) 26954280
Fax: (0755) 26954282

Report Number : ES201021005E
Date(s) of Tests : Oct. 22, 2020 to Dec. 19, 2020
Date of issue : Dec. 20, 2020

# TABLE OF CONTENT

**Test Report Description** **Page**

**1. SUMMARY OF TEST RESULTS ..... 5**

**2. GENERAL INFORMATION ..... 6**

2.1. Description of Device (EUT) ..... 6
2.2. Input / Output Ports ..... 7
2.3. Independent Operation Modes ..... 7
2.4. Test Manner ..... 7
2.5. Description of Test Facility ..... 8
2.6. Test Software ..... 8
2.7. Measurement Uncertainty ..... 8

**3. MEASURING DEVICE AND TEST EQUIPMENT ..... 9**

3.1. For Power Line Conducted Emission Measurement ..... 9
3.2. For Radiated Emission Measurement ..... 9

**4. POWER LINE CONDUCTED EMISSION MEASUREMENT ..... 10**

4.1. Block Diagram of Test Setup ..... 10
4.2. Limits ..... 10
4.3. Test Procedure ..... 10
4.4. Measuring Results ..... 11

**5. RADIATED EMISSION MEASUREMENT (UP TO 1GHz) ..... 14**

5.1. Block Diagram of Test Setup ..... 14
5.2. Radiated Limit ..... 14
5.3. Test Procedure ..... 14
5.4. Measuring Results ..... 15

**6. RADIATED EMISSION MEASUREMENT (ABOVE 1GHz) ..... 18**

6.1. Block Diagram of Test Setup ..... 18
6.2. Radiated Limit ..... 18
6.3. Test Procedure ..... 18
6.4. Measuring Results ..... 19

**7. PHOTOGRAPHS ..... 22**

7.1. Photos of Conducted Emission Measurement ..... 22
7.2. Photos of Radiation Emission Measurement ..... 23

APPENDIX A: Warning Labels
APPENDIX B: Warning Statement
APPENDIX C: Photos of EUT

# TEST REPORT DESCRIPTION

| | | |
|---|---|---|
| Applicant | : | HENAN ESHOW ELECTRONIC COMMERCE CO., LTD |
| Address | : | Room 722, Sanjiang Building, No.170 Nanyang Road, Huiji District, Zhengzhou, Henan, China |
| Manufacturer | : | HENAN ESHOW ELECTRONIC COMMERCE CO., LTD |
| Address | : | Room 722, Sanjiang Building, No.170 Nanyang Road, Huiji District, Zhengzhou, Henan, China |
| EUT | : | Queue Wireless Calling System |
| Model Name | : | TD157, T116A, TD101, TD172, TD173, TD174, TD175, TD177, TD178, TD179, TD180, TD181, TD182 |
| Trademark | : | RETEKESS |

**Measurement Procedure Used:**

FCC CFR Title 47, Part 15, Subpart B,
ANSI C63.4-2014

The device described above is tested by EMTEK (SHENZHEN) CO., LTD. to determine the maximum emission levels emanating from the device and the severe levels of the device can endure and its performance criterion. The measurement results are contained in this test report and EMTEK (SHENZHEN) CO., LTD. is assumed full of responsibility for the accuracy and completeness of these measurements. Also, this report shows that the EUT (Equipment under Test) is technically compliant with the FCC requirements.

This report applies to above tested sample only and shall not be reproduced in part without written approval of EMTEK (SHENZHEN) CO., LTD.

| | | |
|---|---|---|
| Date of Test | : | Oct. 22, 2020 to Dec. 19, 2020 |
| Prepared by | : | Tracy Hu/Editor |
| Reviewer | : | Joe Xia/Supervisor |
| Approved & Authorized Signer | : | Lisa Wang/Manager |

EMTEK (SHENZHEN) CO., LTD. TESTING

# Modified Information

| Version | Report No. | Revision Data | Summary |
|---|---|---|---|
| Ver.1.0 | ES201021005E | / | Original Version |
| | | | |
| | | | |
| | | | |

# 1. SUMMARY OF TEST RESULTS

| EMISSION | | |
|---|---|---|
| Description of Test Item | Standard & Limits | Results |
| Conducted Disturbance at Mains Terminals | FCC Part 15, Subpart B- Section 15.107, Class B ANSI C63.4-2014 | Pass |
| Radiated Disturbance | FCC Part 15, Subpart B- Section 15.109, Class B ANSI C63.4-2014 | Pass |
| Note: N/A is an abbreviation for Not Applicable. | | |

# 2. GENERAL INFORMATION

## 2.1 Description of Device (EUT)

| | | |
|---|---|---|
| EUT | : | Queue Wireless Calling System |
| Model Number | : | TD157, T116A, TD101, TD172, TD173, TD174, TD175, TD177, TD178, TD179, TD180, TD181, TD182<br>All models are identical in the same PCB layout, interior structure and electrical circuits, only differences are the model name and appearance color for commercial purpose. We prepare TD157 for test, and the worst result recorded in the report. |
| Power supply | : | DC 3.7V from battery |
| Test sample | | 1# |
| Applicant | : | HENAN ESHOW ELECTRONIC COMMERCE CO., LTD |
| Address | : | Room 722, Sanjiang Building, No.170 Nanyang Road, Huiji District, Zhengzhou, Henan, China |
| Manufacturer | : | HENAN ESHOW ELECTRONIC COMMERCE CO., LTD |
| Address | : | Room 722, Sanjiang Building, No.170 Nanyang Road, Huiji District, Zhengzhou, Henan, China |
| Date of Received | : | Oct. 21, 2020 |
| Date of Test | : | Oct. 22, 2020 to Dec. 19, 2020 |

## 2.2 Input / Output Ports

| EUT Cable List and Details | | | |
|---|---|---|---|
| Cable Description | Length (m) | Shielded/Unshielded | With / Without Ferrite |
| / | / | / | / |
| / | / | / | / |
| / | / | / | / |

| Auxiliary Cable List and Details | | | |
|---|---|---|---|
| Cable Description | Length (m) | Shielded/Unshielded | With / Without Ferrite |
| / | / | / | / |

| Auxiliary Equipment List and Details | | | |
|---|---|---|---|
| Description | Manufacturer | Model | Serial Number |
| / | / | / | / |

**Notes:**

1) All the equipment/cables were placed in the worst-case configuration to maximize the emission during the test.
2) Grounding was established in accordance with the manufacturer's requirements and conditions for the intended use.

## 2.3 Independent Operation Modes

A. On
   1. Charging
   2. Communication

B.Stand-by

C.Off

## 2.4 Test Manner

| Test Items | Test Voltage | Operation Modes | Worst case |
|---|---|---|---|
| Conducted Emission | AC120V/60Hz | Mode A | A1 |
| Radiated Emission | AC120V/60Hz<br>3.7V DC | Mode A1/A2 | A1 |

## 2.5 Description of Test Facility

Site Description

| | | |
|---|---|---|
| EMC Lab. | : | Accredited by CNAS, 2018.11.30<br>The certificate is valid until 2022.10.28<br>The Laboratory has been assessed and proved to be in compliance with CNAS-CL01:2006 (identical to ISO/IEC 17025:2017)<br>The Certificate Registration Number is L2291<br><br>Accredited by FCC<br>Designation Number: CN1204<br>Test Firm Registration Number: 882943<br>Accredited by A2LA, August 25, 2020<br>The Certificate Registration Number is 4321.01<br><br>Accredited by Industry Canada, November 09, 2018<br>The Conformity Assessment Body Identifier is CN0008 |
| Name of Firm | : | EMTEK(SHENZHEN) CO., LTD. |
| Site Location | : | Building 69, Majialong Industry Zone,<br>Nanshan District, Shenzhen, Guangdong, China |

## 2.6 Test Software

| Item | | Software |
|---|---|---|
| Conducted Emission | : | EMTEK(Ver.CON-03A1)-Shenzhen |
| Radiated Emission | : | EMTEK(Ver.RA-03A1)-Shenzhen |

## 2.7 Measurement Uncertainty

| Test Item | | Uncertainty |
|---|---|---|
| Conducted Emission Uncertainty | : | 3.16dB(9k~150kHz Conduction 2#)<br>2.90dB(150k-30MHz Conduction 2#) |
| Radiated Emission Uncertainty (3m Chamber) | : | 3.78dB (30M~1GHz Polarize: H)<br>4.27dB (30M~1GHz Polarize: V)<br>4.46dB (1~6GHz) |

# 3. MEASURING DEVICE AND TEST EQUIPMENT

For Power Line Conducted Emission Measurement

| Used | Equipment | Manufacturer | Model No. | Serial No. | Last Cal. | Cal. Interval |
|---|---|---|---|---|---|---|
| ☑ | Test Receiver | Rohde & Schwarz | ESCI | 101384 | May 16, 2020 | 1 Year |
| ☑ | L.I.S.N. | ROHDE & SCHWARZ | ENV216 | 5 | May 16, 2020 | 1 Year |
| ☑ | 50Ω Coaxial Switch | Anritsu | MP59B | M20531 | May 21, 2020 | 1 Year |
| ☑ | Pulse Limiter | Rohde & Schwarz | ESH3-Z2 | 100006 | May 20, 2020 | 1 Year |

For Radiated Emission Measurement

| Used | Equipment | Manufacturer | Model No. | Serial No. | Last Cal. | Cal. Interval |
|---|---|---|---|---|---|---|
| ☑ | EMI Test Receiver | Rohde & Schwarz | ESU | 100154 | May 16, 2020 | 1 Year |
| ☑ | Pre-Amplifier | Lunar EM | LNA30M3G-25 | J10100000070 | May 16, 2020 | 1 Year |
| ☑ | Bilog Antenna | Schwarzbeck | VULB9163 | 659 | Sep. 22, 2019 | 2 Year |
| ☑ | Pre-Amplifier | SKET. | LNPA_0118G-45 | SK2019051801 | May 19, 2020 | 1 Year |
| ☑ | Horn Antenna | Schwarzbeck | BBHA9120D | 9120D-1177 | June12, 2020 | 2 Year |

# 4. POWER LINE CONDUCTED EMISSION MEASUREMENT

## 3.1 Block Diagram of Test Setup

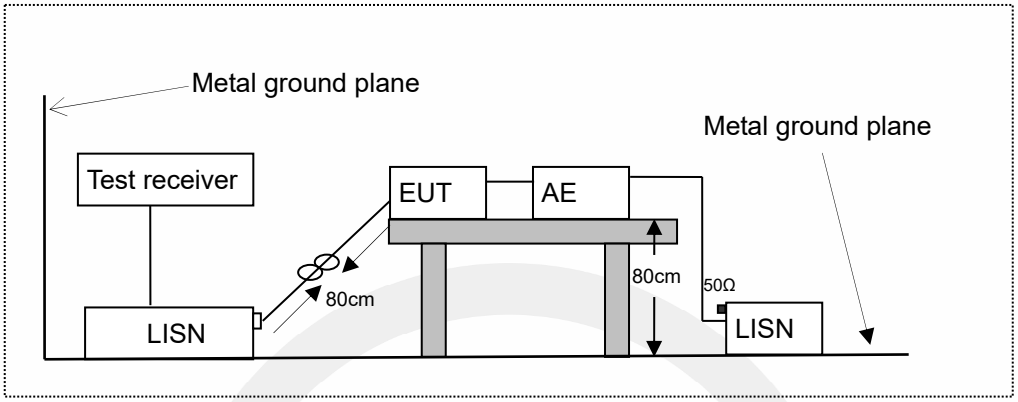


LISN: Line Impedance Stabilization Network
AE: Associated equipment
EUT: Equipment under test

## 3.2 Limits

FCC Part 15, Subpart B, Class B

| Frequency (MHz) | | | Limit (dBμV) | |
|---|---|---|---|---|
| | | | Quasi-peak Level | Average Level |
| 0.15 | ~ | 0.50 | 66.0 ~ 56.0 * | 56.0 ~ 46.0 * |
| 0.50 | ~ | 5.00 | 56.0 | 46.0 |
| 5.00 | ~ | 30.00 | 60.0 | 50.0 |
| NOTE1-The lower limit shall apply at the transition frequencies.<br>NOTE2-The limit decreases linearly with the logarithm of the frequency in the range 0.15MHz to 0.50MHz. | | | | |

## 3.3 Test Procedure

The EUT was placed on a desk 0.8 m height from the metal ground plane and 0.4 m from the conducting wall of the shielding room and it was kept at least 0.8 m from any other grounded conducting surface. The size of the table will nominally be 1.5 m x1.0 m.

The rear of the arrangement shall be flush with the back of the supporting tabletop unless that would not be possible or typical of normal use.

All units of equipment forming the system under test (includes the EUT as well as connected peripherals and associated equipment or devices) shall be arranged such that a nominal 0.1 m separation is achieved between the neighboring units.

Connect EUT to the power mains through a line impedance stabilization network (LISN). Where the mains cable supplied by the manufacturer is longer than 1 m, the excess should be folded at the

centre into a bundle no longer than 0.4 m, so that its length is shortened to 1 m.

All the support units are connecting to the other LISN.

The LISN provides 50 ohm coupling impedance for the measuring instrument.

Both sides of AC line were checked for maximum conducted interference.

The frequency range from 150 kHz to 30 MHz was sweep.

Set the test-receiver system to quasi peak detect function and average detect function, and to measure the conducted emissions values.

Test results were obtained from the following equation:
Emission Level (dBμV) = LISN Factor (dB) + Cable Loss (dB) + Reading (dBμV)
Margin (dB) = Emission Level (dBμV) - Limit (dBμV)

## 3.4 Measuring Results

**Pass**
All the modes were tested and the data of the worst modes are attached the following pages.

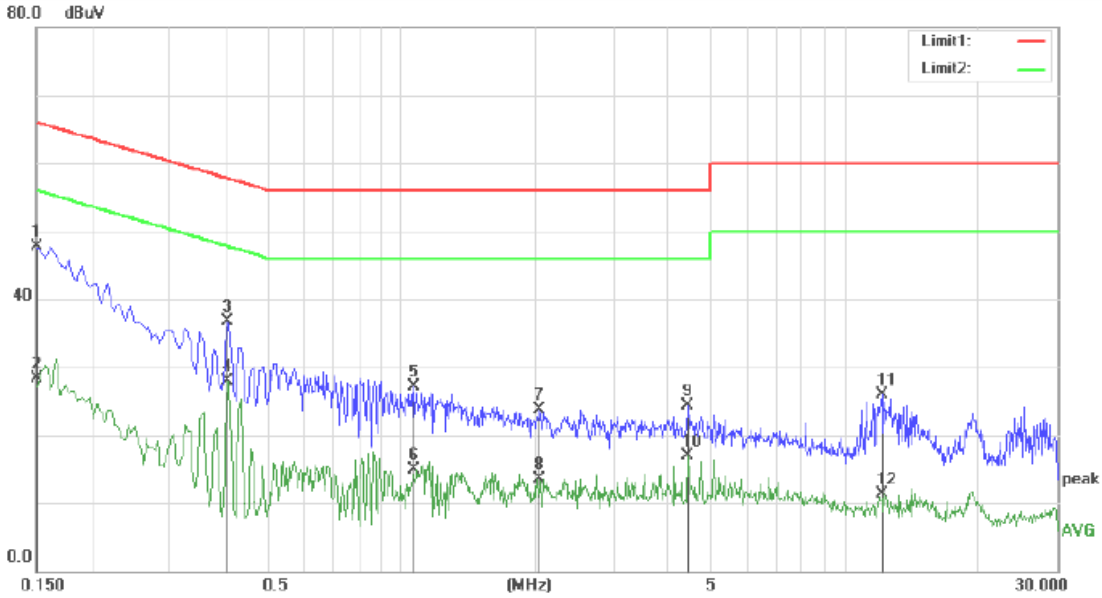


Site Conduction #1 Phase: N Temperature: 24.1

Limit: (CE)FCC PART 15 class B_QP Power: AC 120V/60Hz Humidity: 53 %

Mode: Charging

Note:

| No. | Mk. | Freq. | Reading Level | Correct Factor | Measure-ment | Limit | Over | | |
|---|---|---|---|---|---|---|---|---|---|
| | | MHz | dBuV | dB | dBuV | dBuV | dB | Detector | Comment |
| 1 | * | 0.1500 | 38.14 | 9.58 | 47.72 | 66.00 | -18.28 | QP | |
| 2 | | 0.1500 | 18.64 | 9.58 | 28.22 | 56.00 | -27.78 | AVG | |
| 3 | | 0.4060 | 27.39 | 9.33 | 36.72 | 57.73 | -21.01 | QP | |
| 4 | | 0.4060 | 18.65 | 9.33 | 27.98 | 47.73 | -19.75 | AVG | |
| 5 | | 1.0700 | 17.12 | 9.90 | 27.02 | 56.00 | -28.98 | QP | |
| 6 | | 1.0700 | 4.98 | 9.90 | 14.88 | 46.00 | -31.12 | AVG | |
| 7 | | 2.0500 | 13.80 | 9.94 | 23.74 | 56.00 | -32.26 | QP | |
| 8 | | 2.0500 | 3.63 | 9.94 | 13.57 | 46.00 | -32.43 | AVG | |
| 9 | | 4.4300 | 14.32 | 9.92 | 24.24 | 56.00 | -31.76 | QP | |
| 10 | | 4.4300 | 6.91 | 9.92 | 16.83 | 46.00 | -29.17 | AVG | |
| 11 | | 12.0660 | 15.69 | 10.15 | 25.84 | 60.00 | -34.16 | QP | |
| 12 | | 12.0660 | 1.16 | 10.15 | 11.31 | 50.00 | -38.69 | AVG | |

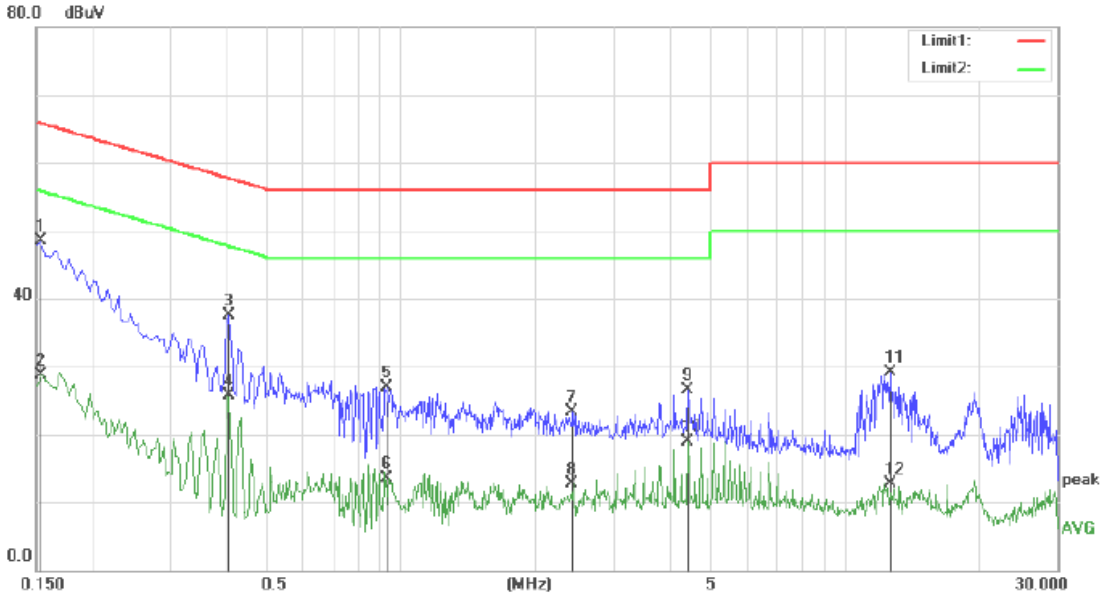


Site Conduction #1 Phase: L1 Temperature: 24.1

Limit: (CE)FCC PART 15 class B_QP Power: AC 120V/60Hz Humidity: 53 %

Mode: Charging

Note:

| No. | Mk. | Freq. | Reading Level | Correct Factor | Measure-ment | Limit | Over | | |
|---|---|---|---|---|---|---|---|---|---|
| | | MHz | dBuV | dB | dBuV | dBuV | dB | Detector | Comment |
| 1 | * | 0.1540 | 38.88 | 9.57 | 48.45 | 65.78 | -17.33 | QP | |
| 2 | | 0.1540 | 19.22 | 9.57 | 28.79 | 55.78 | -26.99 | AVG | |
| 3 | | 0.4100 | 28.25 | 9.32 | 37.57 | 57.65 | -20.08 | QP | |
| 4 | | 0.4100 | 16.29 | 9.32 | 25.61 | 47.65 | -22.04 | AVG | |
| 5 | | 0.9260 | 17.15 | 9.74 | 26.89 | 56.00 | -29.11 | QP | |
| 6 | | 0.9260 | 3.74 | 9.74 | 13.48 | 46.00 | -32.52 | AVG | |
| 7 | | 2.4340 | 13.42 | 9.94 | 23.36 | 56.00 | -32.64 | QP | |
| 8 | | 2.4340 | 2.82 | 9.94 | 12.76 | 46.00 | -33.24 | AVG | |
| 9 | | 4.4300 | 16.54 | 9.92 | 26.46 | 56.00 | -29.54 | QP | |
| 10 | | 4.4300 | 9.00 | 9.92 | 18.92 | 46.00 | -27.08 | AVG | |
| 11 | | 12.6340 | 18.86 | 10.17 | 29.03 | 60.00 | -30.97 | QP | |
| 12 | | 12.6340 | 2.49 | 10.17 | 12.66 | 50.00 | -37.34 | AVG | |

# 5. RADIATED EMISSION MEASUREMENT (UP TO 1GHz)

## 5.1 Block Diagram of Test Setup

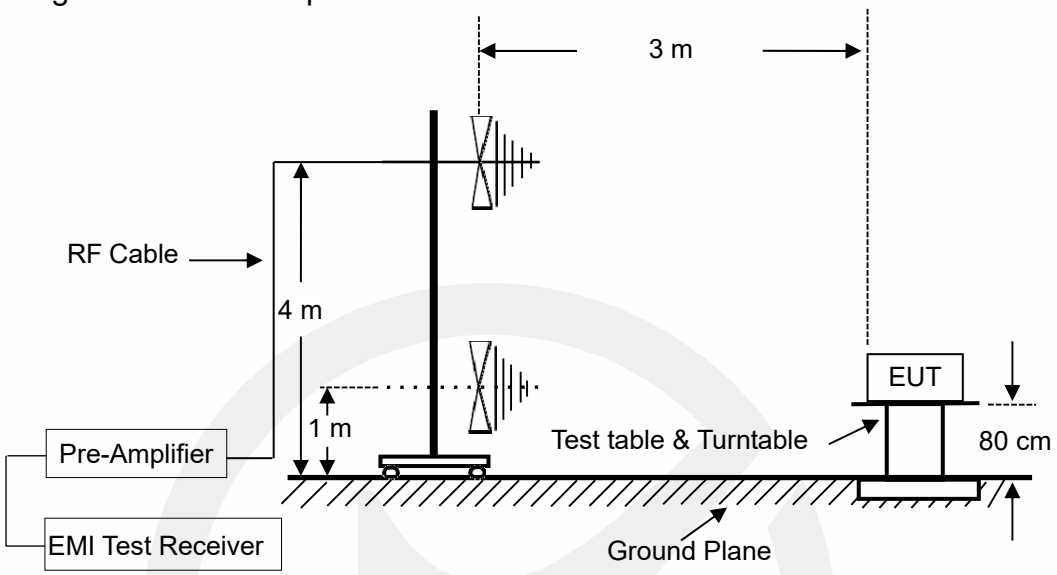


## 5.2 Radiated Limit

FCC Part 15, Subpart B, Class B

| Frequency MHz | Distance Meters | Field Strengths Limit | |
|---|---|---|---|
| | | μV/m | dB(μV)/m |
| 30 ~ 88 | 3 | 100 | 40.0 |
| 88 ~ 216 | 3 | 150 | 43.5 |
| 216 ~ 960 | 3 | 200 | 46.0 |
| 960 ~ 1000 | 3 | 500 | 54.0 |

## 5.3 Test Procedure

The EUT was placed on a non-conductive table whose total height equaled 80cm. All units of equipment forming the system under test (includes the EUT as well as connected peripherals and associated equipment or devices) shall be arranged such that a nominal 0.1 m separation is achieved between the neighboring units. Where the mains cable supplied by the manufacturer is longer than 1 m, the excess should be folded at the centre into a bundle no longer than 0.4 m, so that its length is shortened to 1 m.

The EUT was set 3 meters away from the receiving antenna that was mounted on a non-conductive mast. The antenna can move up and down between 1 to 4 meters to find out the maximum emission level.

The turntable can rotate 360 degree to determine the position of the maximum emission level.

The initial testing identified the frequency that has the highest disturbance relative to the limit while operating the EUT in typical modes of operation and cable positions in a test setup representative of

typical system configuration.

The identification of the frequency of highest emission with respect to the limit was found by investigating emissions at a number of significant frequencies. The probable frequency of maximum emission had been found and that the associated cable and EUT configuration and mode of operation had been identified.

The bandwidth of the Receiver is set at 120 kHz.

Test results were obtained from the following equation:
Emission level (dBμV/m) = Antenna Factor -Amp Factor +Cable Loss + Reading
Margin (dB) = Emission Level (dBμV/m) - Limit (dBμV/m)

## 5.4 Measuring Results

**PASS.**

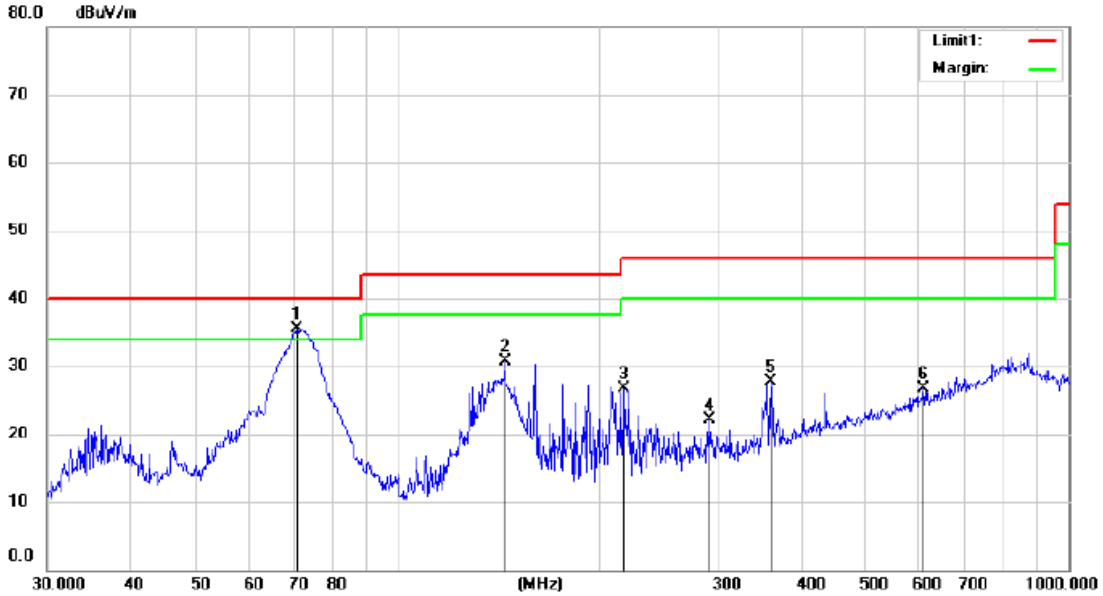


Site 3m Chamber #3 Polarization: *Vertical* Temperature: 22.5 C

Limit: (RE)FCC PART 15 CLASS B Power: AC 120V/60Hz Humidity: 45 %

Mode:Charging

Note:

| No. | Mk. | Freq. | Reading Level | Correct Factor | Measure-ment | Limit | Over | | Antenna Height | Table Degree | |
|---|---|---|---|---|---|---|---|---|---|---|---|
| | | MHz | dBuV | dB | dBuV/m | dBuV/m | dB | Detector | cm | degree | Comment |
| 1 | * | 70.8315 | 50.73 | -15.28 | 35.45 | 40.00 | -4.55 | QP | | | |
| 2 | | 144.5246 | 47.27 | -16.63 | 30.64 | 43.50 | -12.86 | QP | | | |
| 3 | | 217.5443 | 42.29 | -15.67 | 26.62 | 46.00 | -19.38 | QP | | | |
| 4 | | 292.6990 | 34.23 | -12.07 | 22.16 | 46.00 | -23.84 | QP | | | |
| 5 | | 359.6586 | 37.43 | -9.64 | 27.79 | 46.00 | -18.21 | QP | | | |
| 6 | | 609.6544 | 29.93 | -3.13 | 26.80 | 46.00 | -19.20 | QP | | | |

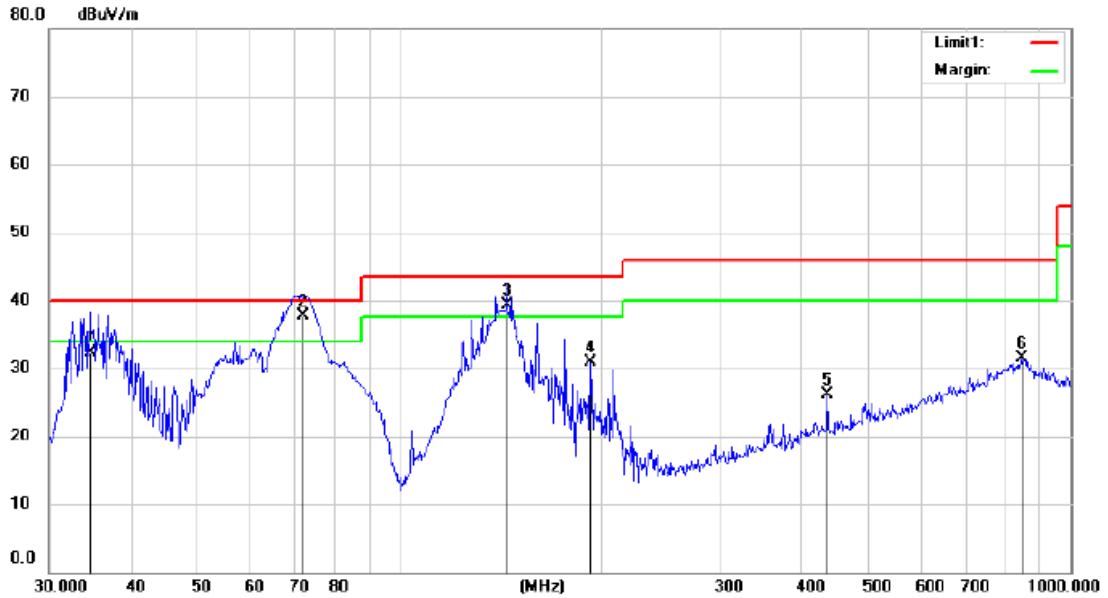


Site 3m Chamber #3 Polarization: ***Horizontal*** Temperature: 22.5 C

Limit: (RE)FCC PART 15 CLASS B Power: AC 120V/60Hz Humidity: 45 %

Mode:Charging

Note:

| No. | Mk. | Freq. | Reading Level | Correct Factor | Measure-ment | Limit | Over | | Antenna Height | Table Degree | |
|---|---|---|---|---|---|---|---|---|---|---|---|
| | | MHz | dBuV | dB | dBuV/m | dBuV/m | dB | Detector | cm | degree | Comment |
| 1 | | 34.5173 | 48.38 | -16.08 | 32.30 | 40.00 | -7.70 | QP | | | |
| 2 | * | 72.0211 | 53.23 | -15.53 | 37.70 | 40.00 | -2.30 | QP | | | |
| 3 | ! | 144.4613 | 55.93 | -16.63 | 39.30 | 43.50 | -4.20 | QP | | | |
| 4 | | 192.6717 | 46.92 | -16.09 | 30.83 | 43.50 | -12.67 | peak | | | |
| 5 | | 435.2081 | 33.24 | -7.15 | 26.09 | 46.00 | -19.91 | peak | | | |
| 6 | | 845.0877 | 28.69 | 2.87 | 31.56 | 46.00 | -14.44 | peak | | | |

# 6. RADIATED EMISSION MEASUREMENT (ABOVE 1GHz)

## 6.1 Block Diagram of Test Setup

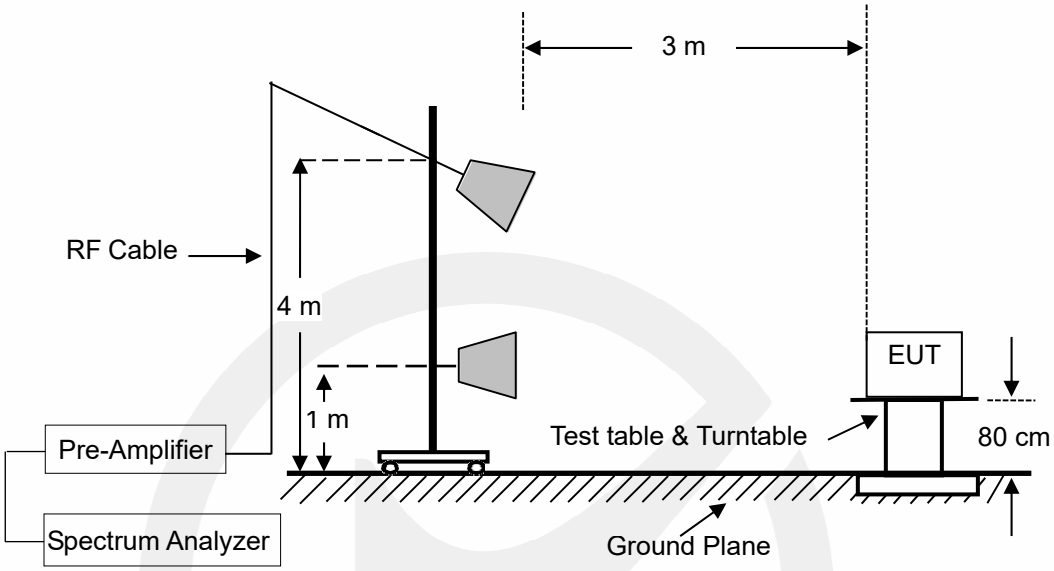


## 6.2 Radiated Limit

FCC Part 15, Subpart B, Class B

| Frequency range GHz | Average limit dB(μV/m) | Peak limit dB(μV/m) |
|---|---|---|
| Above 1000 | 54 | 74 |
| Note: The highest internal source of an EUT is defined as the highest frequency generated or used in the device or on which the EUT operates or tunes. If the highest frequency of the internal sources of the EUT is less than 1.705 MHz, the measurement shall only be made up to 30 MHz. If the highest frequency of the internal sources of the EUT is between 1.705 MHz and 108 MHz, the measurement shall only be made up to 1 GHz. If the highest frequency of the internal sources of the EUT is between 108 MHz and 500 MHz the measurement shall only be made up to 2 GHz. If the highest frequency of the internal sources of the EUT is between 500 MHz and 1 GHz, the measurement shall only be made up to 5 GHz. If the highest frequency of the internal sources of the EUT is above 1 GHz, the measurement shall be made up to 5 times the highest frequency or 40 GHz, whichever is less. | | |

## 6.3 Test Procedure

The EUT was placed on a non-conductive table whose total height equaled 80cm. All units of equipment forming the system under test (includes the EUT as well as connected peripherals and associated equipment or devices) shall be arranged such that a nominal 0.1 m separation is achieved between the neighboring units. Where the mains cable supplied by the manufacturer is longer than 1 m, the excess should be folded at the centre into a bundle no longer than 0.4 m, so that its length is shortened to 1 m.

The EUT was set 3 meters away from the receiving antenna that was mounted on a non-conductive mast. The antenna can move up and down between 1 to 4 meters to find out the maximum emission level.

The turntable can rotate 360 degree to determine the position of the maximum emission level.

The initial testing identified the frequency that has the highest disturbance relative to the limit while operating the EUT in typical modes of operation and cable positions in a test setup representative of typical system configuration.

The identification of the frequency of highest emission with respect to the limit was found by investigating emissions at a number of significant frequencies. The probable frequency of maximum emission had been found and that the associated cable and EUT configuration and mode of operation had been identified.

The frequency range above 1GHz the measuring instrument use RBW=1 MHz and VBW=3 MHz with peak detector for peak values, and use RBW=1 MHz and VBW=10 Hz with peak detector for Average Values.

Test results were obtained from the following equation:
Emission level (dBμV/m) = Antenna Factor - Amp Factor +Cable Loss + Reading
Margin (dB) = Emission Level (dBμV/m) - Limit (dBμV/m)

## 6.4 Measuring Results

**PASS.**

All the modes were tested and the data of the worst modes are attached the following pages.

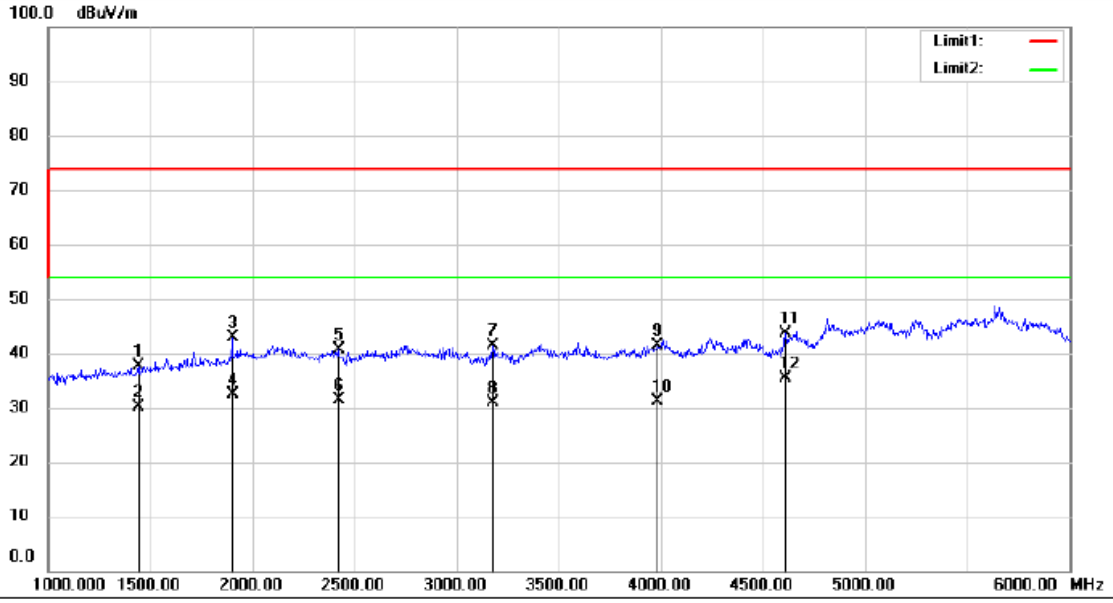


Site 3m Chamber #3 Polarization: *Vertical* Temperature: 22.5 C

Limit: (RE)FCC PART 15 CLASS B Power: AC 120V/60Hz Humidity: 45 %

Mode:Charging

Note:

| No. | Mk. | Freq. | Reading Level | Correct Factor | Measure-ment | Limit | Over | | Antenna Height | Table Degree | |
|---|---|---|---|---|---|---|---|---|---|---|---|
| | | MHz | dBuV | dB | dBuV/m | dBuV/m | dB | Detector | cm | degree | Comment |
| 1 | | 1443.500 | 53.86 | -16.11 | 37.75 | 74.00 | -36.25 | peak | | | |
| 2 | | 1443.500 | 46.31 | -16.11 | 30.20 | 54.00 | -23.80 | AVG | | | |
| 3 | | 1900.500 | 56.55 | -13.61 | 42.94 | 74.00 | -31.06 | peak | | | |
| 4 | | 1900.500 | 46.01 | -13.61 | 32.40 | 54.00 | -21.60 | AVG | | | |
| 5 | | 2420.500 | 53.51 | -12.94 | 40.57 | 74.00 | -33.43 | peak | | | |
| 6 | | 2420.500 | 44.44 | -12.94 | 31.50 | 54.00 | -22.50 | AVG | | | |
| 7 | | 3177.000 | 53.58 | -12.25 | 41.33 | 74.00 | -32.67 | peak | | | |
| 8 | | 3177.000 | 43.05 | -12.25 | 30.80 | 54.00 | -23.20 | AVG | | | |
| 9 | | 3988.000 | 51.15 | -9.65 | 41.50 | 74.00 | -32.50 | peak | | | |
| 10 | | 3988.000 | 40.75 | -9.65 | 31.10 | 54.00 | -22.90 | AVG | | | |
| 11 | | 4610.500 | 51.67 | -8.14 | 43.53 | 74.00 | -30.47 | peak | | | |
| 12 | * | 4610.500 | 43.54 | -8.14 | 35.40 | 54.00 | -18.60 | AVG | | | |

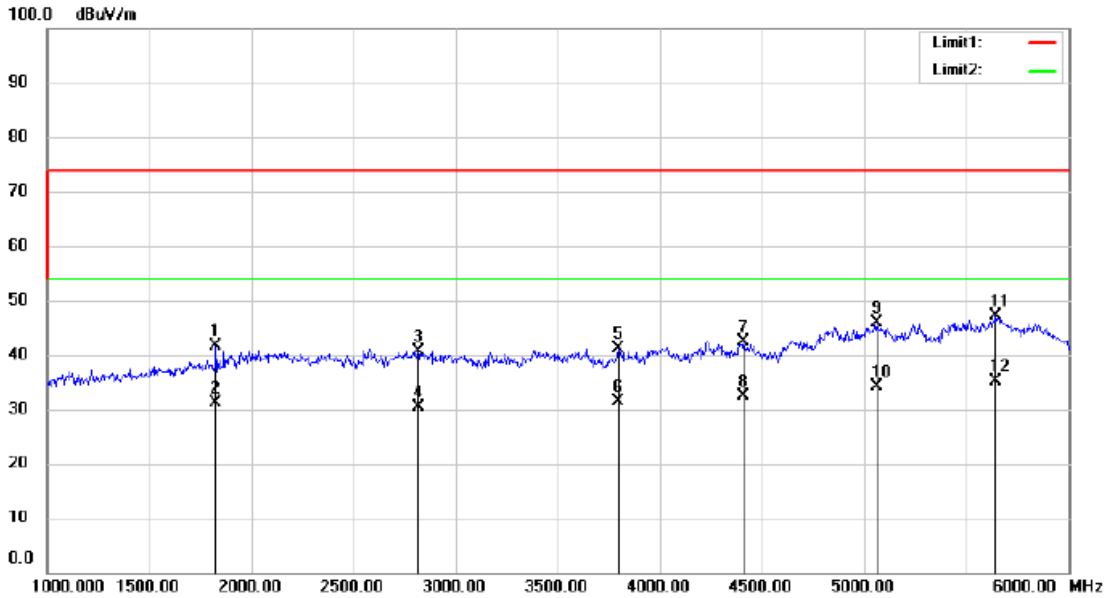


Site 3m Chamber #3 Polarization: ***Horizontal*** Temperature: 22.5 C

Limit: (RE)FCC PART 15 CLASS B Power: AC 120V/60Hz Humidity: 45 %

Mode:Charging

Note:

| No. | Mk. | Freq. | Reading Level | Correct Factor | Measure-ment | Limit | Over | | Antenna Height | Table Degree | |
|---|---|---|---|---|---|---|---|---|---|---|---|
| | | MHz | dBuV | dB | dBuV/m | dBuV/m | dB | Detector | cm | degree | Comment |
| 1 | | 1825.500 | 55.64 | -14.09 | 41.55 | 74.00 | -32.45 | peak | | | |
| 2 | | 1825.500 | 45.29 | -14.09 | 31.20 | 54.00 | -22.80 | AVG | | | |
| 3 | | 2815.500 | 53.19 | -12.55 | 40.64 | 74.00 | -33.36 | peak | | | |
| 4 | | 2815.500 | 43.05 | -12.55 | 30.50 | 54.00 | -23.50 | AVG | | | |
| 5 | | 3799.500 | 51.70 | -10.60 | 41.10 | 74.00 | -32.90 | peak | | | |
| 6 | | 3799.500 | 41.90 | -10.60 | 31.30 | 54.00 | -22.70 | AVG | | | |
| 7 | | 4414.500 | 51.28 | -8.79 | 42.49 | 74.00 | -31.51 | peak | | | |
| 8 | | 4414.500 | 41.29 | -8.79 | 32.50 | 54.00 | -21.50 | AVG | | | |
| 9 | | 5060.500 | 52.23 | -6.26 | 45.97 | 74.00 | -28.03 | peak | | | |
| 10 | | 5060.500 | 40.46 | -6.26 | 34.20 | 54.00 | -19.80 | AVG | | | |
| 11 | | 5646.000 | 51.97 | -4.91 | 47.06 | 74.00 | -26.94 | peak | | | |
| 12 | * | 5646.000 | 40.01 | -4.91 | 35.10 | 54.00 | -18.90 | AVG | | | |

# 7. PHOTOGRAPHS

## 7.1 Photos of Conducted Emission Measurement

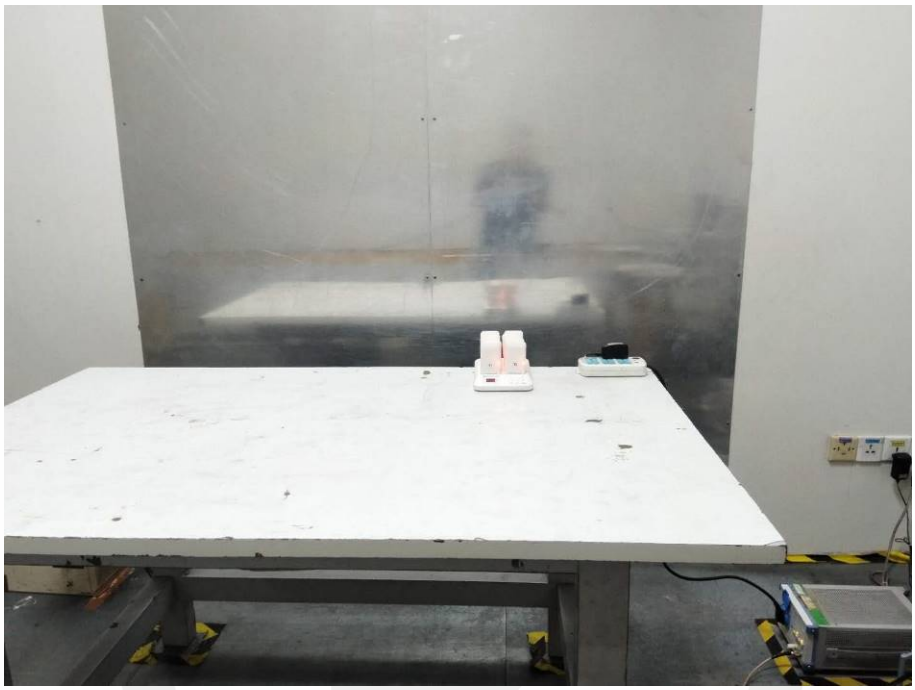

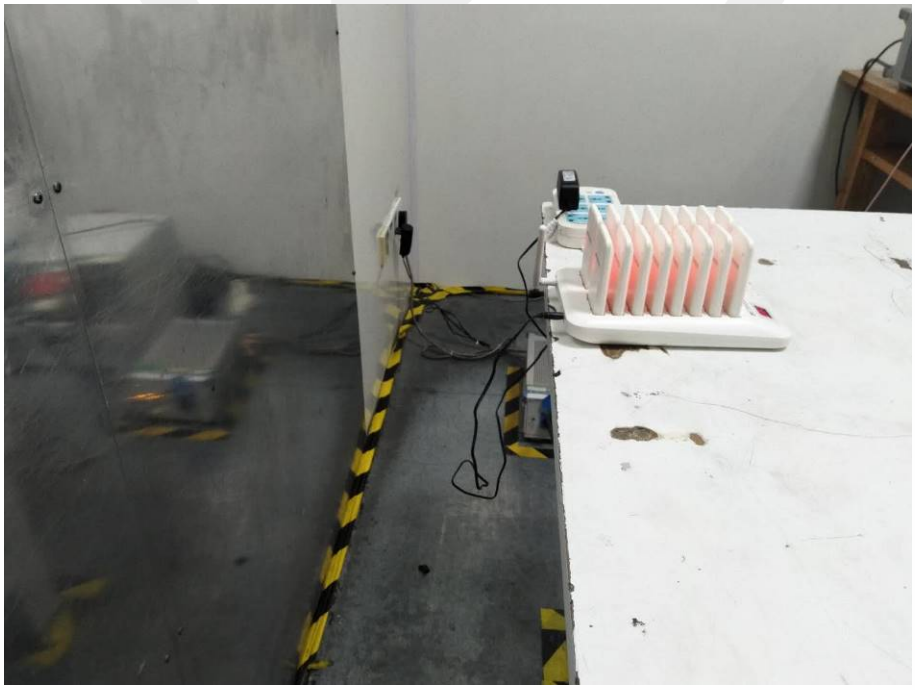

## 7.2 Photos of Radiation Emission Measurement

Spurious Emission Test Setup (Below 1GHz)

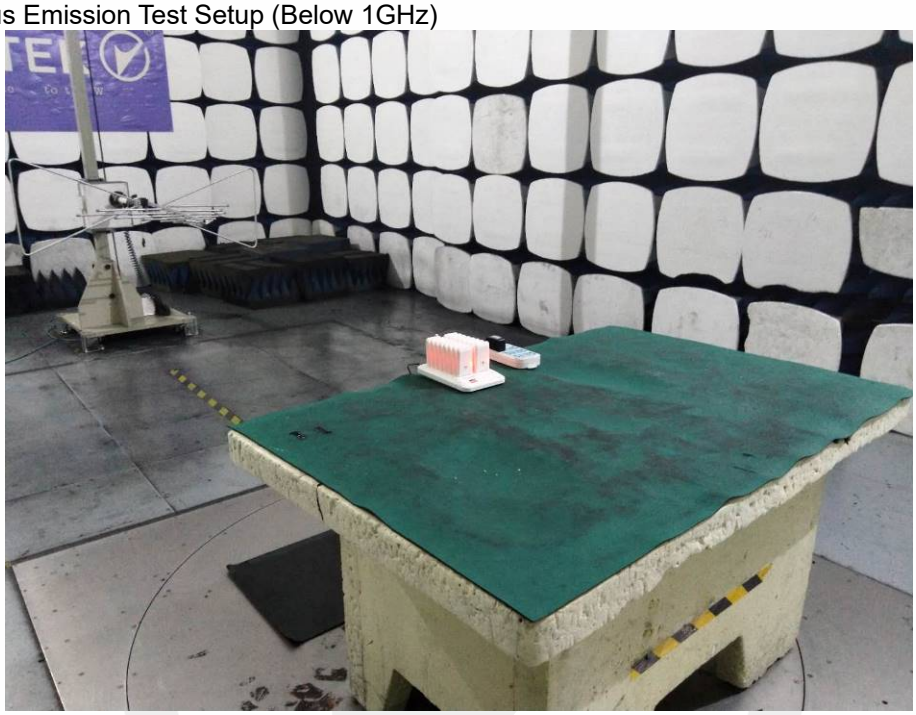

Spurious Emission Test Setup (Above 1GHz)

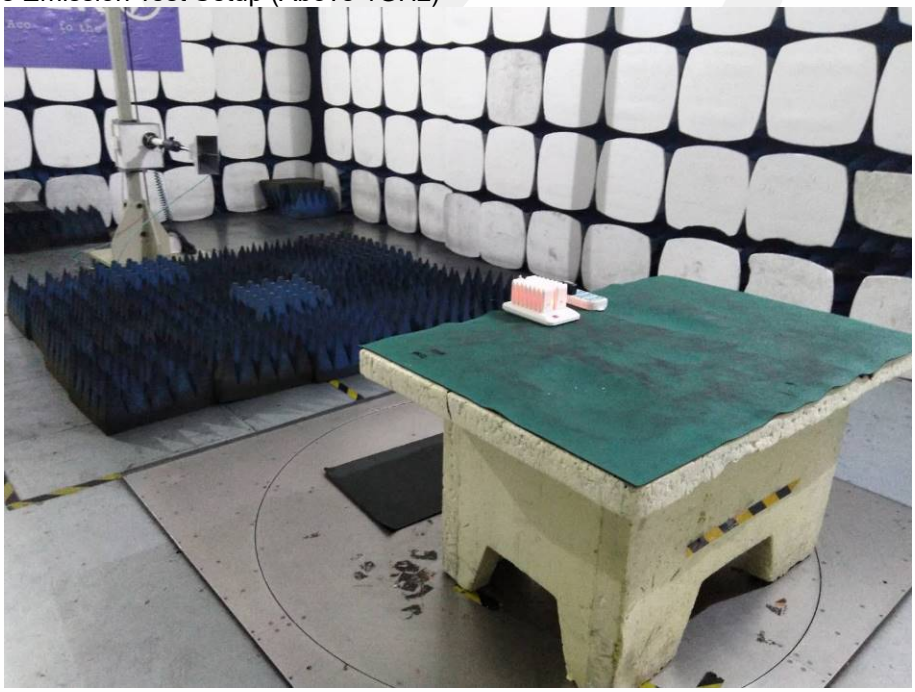

## APPENDIX A: Label Requirements

(1) Receivers associated with the operation of a licensed radio service, e.g., FM broadcast under part 73 of this chapter, land mobile operation under part 90 of this chapter, etc., shall bear the following statement in a conspicuous location on the device:
This device complies with part 15 of the FCC Rules. Operation is subject to the condition that this device does not cause harmful interference.

(2) A stand-alone cable input selector switch, shall bear the following statement in a conspicuous location on the device:
This device complies with part 15 of the FCC Rules for use with cable television service.

(3) All other devices shall bear the following statement in a conspicuous location on the device:
This device complies with part 15 of the FCC Rules. Operation is subject to the following two conditions: (1) This device may not cause harmful interference, and (2) this device must accept any interference received, including interference that may cause undesired operation.

## APPENDIX B: Warning Statement

(a) For a Class A digital device or peripheral, the instructions furnished the user shall include the following or similar statement, placed in a prominent location in the text of the manual:

NOTE: This equipment has been tested and found to comply with the limits for a Class A digital device, pursuant to part 15 of the FCC Rules. These limits are designed to provide reasonable protection against harmful interference when the equipment is operated in a commercial environment. This equipment generates, uses, and can radiate radio frequency energy and, if not installed and used in accordance with the instruction manual, may cause harmful interference to radio communications. Operation of this equipment in a residential area is likely to cause harmful interference in which case the user will be required to correct the interference at his own expense.

(b) For a Class B digital device or peripheral, the instructions furnished the user shall include the following or similar statement, placed in a prominent location in the text of the manual:

NOTE: This equipment has been tested and found to comply with the limits for a Class B digital device, pursuant to part 15 of the FCC Rules. These limits are designed to provide reasonable protection against harmful interference in a residential installation. This equipment generates uses and can radiate radio frequency energy and, if not installed and used in accordance with the instructions, may cause harmful interference to radio communications. However, there is no guarantee that interference will not occur in a particular installation. If this equipment does cause harmful interference to radio or television reception, which can be determined by turning the equipment off and on, the user is encouraged to try to correct the interference by one or more of the following measures:
—Reorient or relocate the receiving antenna.
—Increase the separation between the equipment and receiver.
—Connect the equipment into an outlet on a circuit different from that to which the receiver is connected.
—Consult the dealer or an experienced radio/TV technician for help.

# APPENDIX C: Photos of EUT

**EUT View 1**

**EUT View 2**

**EUT View 3**

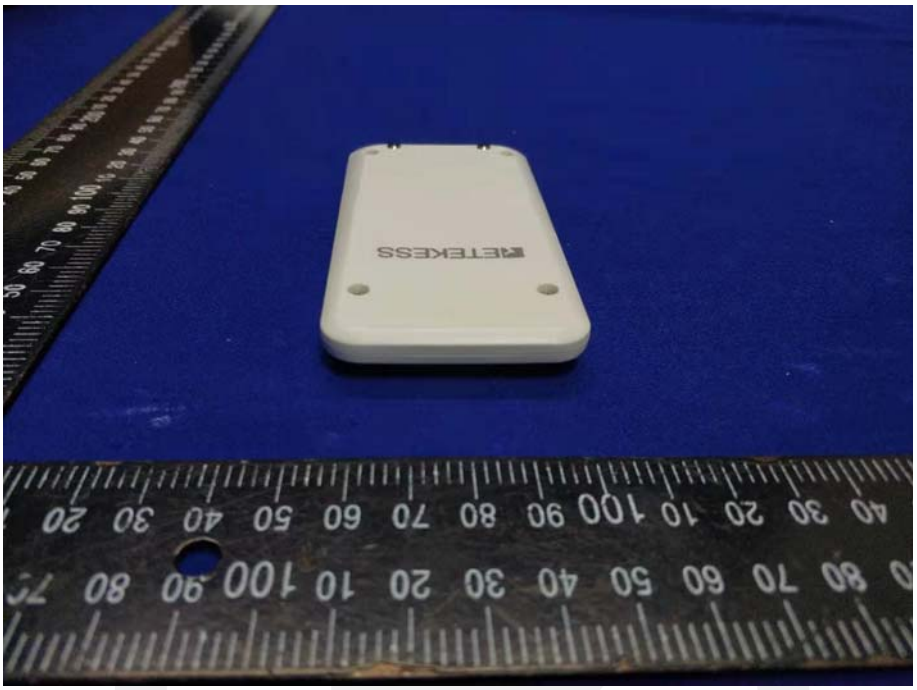

**EUT View 4**

**EUT View 5**

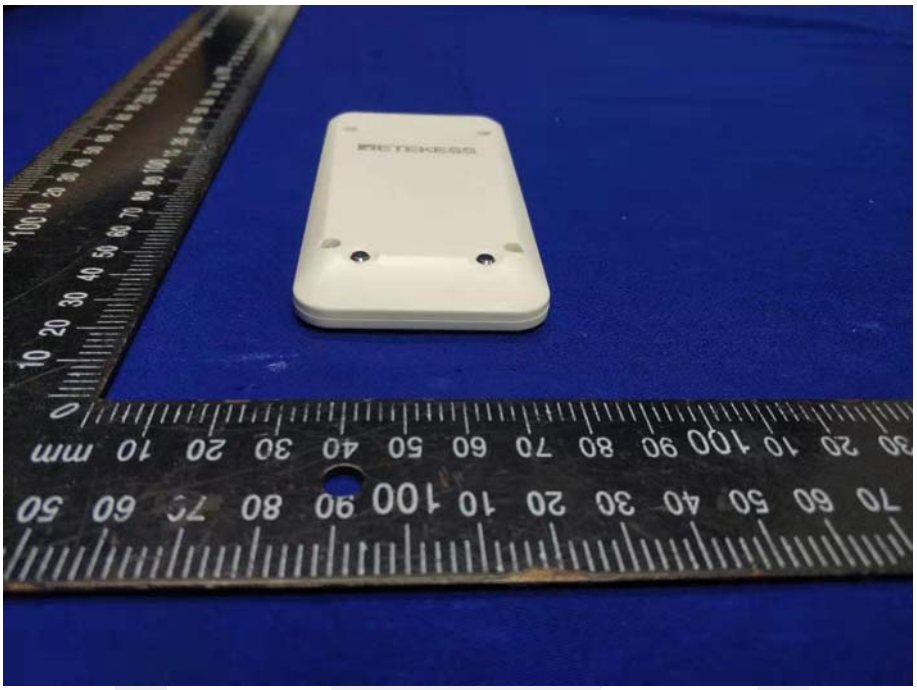


**EUT View 6**

**EUT View 7**

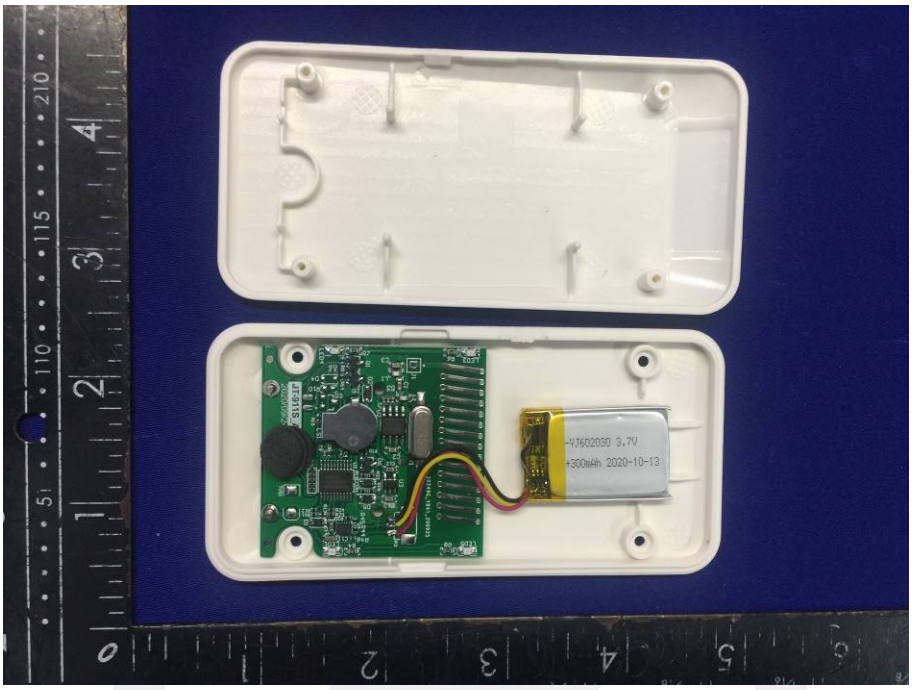


**Battery**

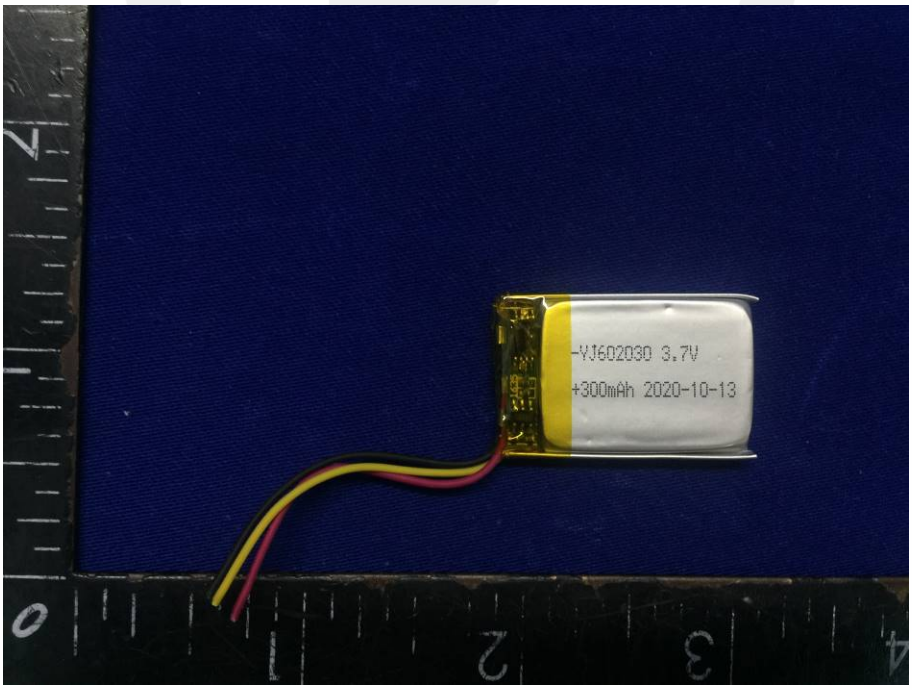

**Solder Board-Component View 1**

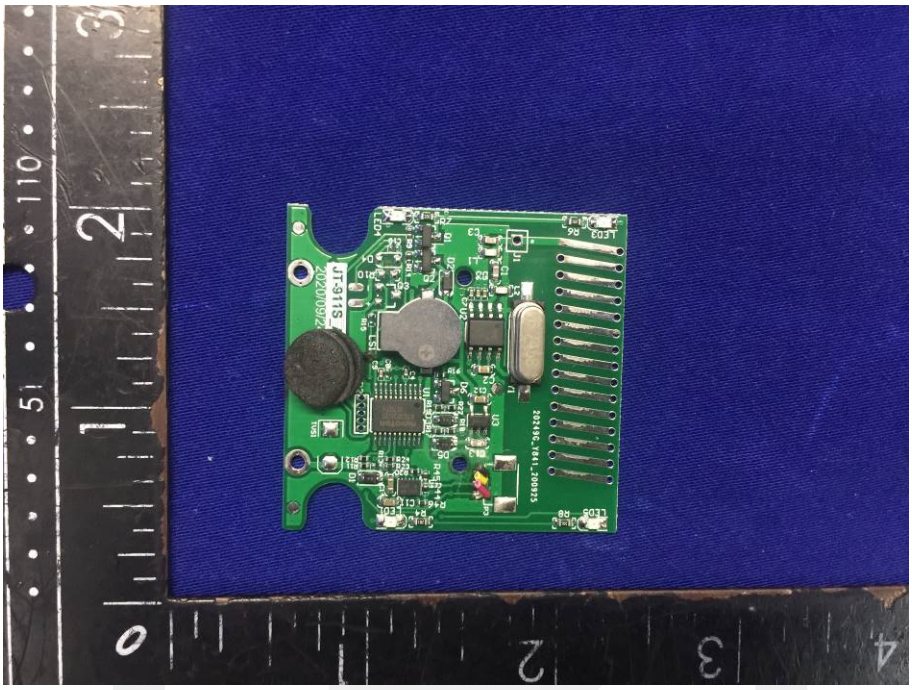

**Solder Board-Component View 2**

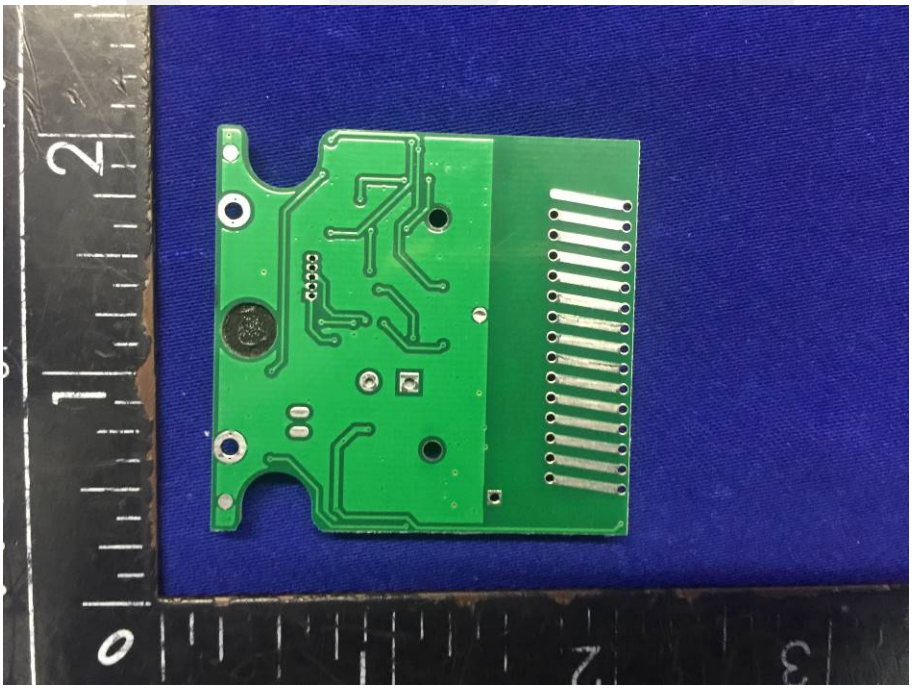

----------The end----------