TEST REPORT

Product Name : Queue Wireless Calling System
Model Number : TD172
FCC ID : 2AAR8TD172A

Prepared for	:	HENAN ESHOW ELECTRONIC COMMERCE CO., LTD
Address	:	Room 722, Sanjiang Building, No.170 Nanyang Road, Huiji District, Zhengzhou, Henan, China
Prepared by	:	EMTEK (SHENZHEN) CO., LTD.
Address	:	Building 69, Majialong Industry Zone, Nanshan District, Shenzhen, Guangdong, China Tel: (0755) 26954280 Fax: (0755) 26954282
Report Number	:	ES210624028E
Date(s) of Tests	:	June 24, 2021 to July 21, 2021
Date of issue	:	July 22, 2021

TABLE OF CONTENT

Test Report Description **Page**

1. SUMMARY OF TEST RESULTS **5**

2. GENERAL INFORMATION **6**

2.1 Description of Device (EUT) 6
2.2 Input / Output Ports 7
2.3 Independent Operation Modes 7
2.4 Test Manner 7
2.5 Description of Test Facility 8
2.6 Test Software 8
2.7 Measurement Uncertainty 8

3. MEASURING DEVICE AND TEST EQUIPMENT **9**

For Power Line Conducted Emission Measurement 9
For Radiated Emission Measurement 9

4. POWER LINE CONDUCTED EMISSION MEASUREMENT **10**

3.1 Block Diagram of Test Setup 10
3.2 Limits 10
3.3 Test Procedure 10
3.4 Measuring Results 11

5. RADIATED EMISSION MEASUREMENT (UP TO 1GHZ) **14**

5.1 Block Diagram of Test Setup 14
5.2 Radiated Limit 14
5.3 Test Procedure 14
5.4 Measuring Results 15

6. RADIATED EMISSION MEASUREMENT (ABOVE 1GHZ) **18**

6.1 Block Diagram of Test Setup 18
6.2 Radiated Limit 18
6.3 Test Procedure 18
6.4 Measuring Results 19

7. PHOTOGRAPHS **22**

7.1 Photos of Conducted Emission Measurement 22
7.2 Photos of Radiation Emission Measurement 23

APPENDIX A: Warning Labels
APPENDIX B: Warning Statement
APPENDIX C: Photos of EUT

TEST REPORT DESCRIPTION

Applicant	:	HENAN ESHOW ELECTRONIC COMMERCE CO., LTD
Address	:	Room 722, Sanjiang Building, No.170 Nanyang Road, Huiji District, Zhengzhou, Henan, China
Manufacturer	:	HENAN ESHOW ELECTRONIC COMMERCE CO., LTD
Address	:	Room 722, Sanjiang Building, No.170 Nanyang Road, Huiji District, Zhengzhou, Henan, China
EUT	:	Queue Wireless Calling System
Model Name	:	TD172
Trademark	:	RETEKESS

Measurement Procedure Used:

FCC CFR Title 47, Part 15, Subpart B,
ANSI C63.4-2014

The device described above is tested by EMTEK (SHENZHEN) CO., LTD. to determine the maximum emission levels emanating from the device and the severe levels of the device can endure and its performance criterion. The measurement results are contained in this test report and EMTEK (SHENZHEN) CO., LTD. is assumed full of responsibility for the accuracy and completeness of these measurements. Also, this report shows that the EUT (Equipment under Test) is technically compliant with the FCC requirements.

This report applies to above tested sample only and shall not be reproduced in part without written approval of EMTEK (SHENZHEN) CO., LTD.

Date of Test :	June 24, 2021 to July 21, 2021
Prepared by :	Mill Chen Mill Chen /Editor
Reviewer :	Sewen Guo Sewen Guo /Supervisor
Approve & Authorized Signer :	Lisa Wang/Manager

EMTEK (SHENZHEN) CO., LTD. TESTING

Modified Information

Version	Report No.	Revision Data	Summary
Ver.1.0	ES210624028E	/	Original Version

1. SUMMARY OF TEST RESULTS

EMISSION		
Description of Test Item	Standard & Limits	Results
Conducted Disturbance at Mains Terminals	FCC Part 15, Subpart B- Section 15.107, Class B ANSI C63.4-2014	Pass
Radiated Disturbance	FCC Part 15, Subpart B- Section 15.109, Class B ANSI C63.4-2014	Pass
Note: N/A is an abbreviation for Not Applicable.		

2. GENERAL INFORMATION

2.1 Description of Device (EUT)

EUT	:	Queue Wireless Calling System
Model Number	:	TD172
Power supply	:	DC 3.7V from battery
Test sample		1#
Applicant	:	HENAN ESHOW ELECTRONIC COMMERCE CO., LTD
Address	:	Room 722, Sanjiang Building, No.170 Nanyang Road, Huiji District, Zhengzhou, Henan, China
Manufacturer	:	HENAN ESHOW ELECTRONIC COMMERCE CO., LTD
Address	:	Room 722, Sanjiang Building, No.170 Nanyang Road, Huiji District, Zhengzhou, Henan, China
Date of Received	:	June 24, 2021

2.2 Input / Output Ports

EUT Cable List and Details			
Cable Description	Length (m)	Shielded/Unshielded	With / Without Ferrite
/	/	/	/
/	/	/	/
/	/	/	/

Auxiliary Cable List and Details			
Cable Description	Length (m)	Shielded/Unshielded	With / Without Ferrite
/	/	/	/

Auxiliary Equipment List and Details			
Description	Manufacturer	Model	Serial Number
/	/	/	/

Notes:

1) All the equipment/cables were placed in the worst-case configuration to maximize the emission during the test.
2) Grounding was established in accordance with the manufacturer's requirements and conditions for the intended use.

2.3 Independent Operation Modes

A. On
   1. Charging
   2. 433MHz link

B.Stand-by

C.Off

2.4 Test Manner

Test Items	Test Voltage	Operation Modes	Worst case
Conducted Emission	AC120V/60Hz	Mode A	A1
Radiated Emission	AC120V/60Hz 3.7V DC	Mode A1/A2	A1

2.5 Description of Test Facility

Site Description

EMC Lab. : **Accredited by CNAS**
The Certificate Registration Number is L2291.
The Laboratory has been assessed and proved to be in compliance with CNAS-CL01 (identical to ISO/IEC 17025:2017)

Accredited by FCC
Designation Number: CN1204
Test Firm Registration Number: 882943

Accredited by A2LA
The Certificate Number is 4321.01.

Accredited by Industry Canada
The Conformity Assessment Body Identifier is CN0008

Name of Firm : EMTEK (SHENZHEN) CO., LTD.

Site Location : Building 69, Majialong Industry Zone, Nanshan District, Shenzhen, Guangdong, China

2.6 Test Software

Item	Software
Conducted Emission	EMTEK(Ver.CON-03A1)-Shenzhen
Radiated Emission	EMTEK(Ver.RA-03A1)-Shenzhen

2.7 Measurement Uncertainty

Test Item	Uncertainty
Conducted Emission Uncertainty	3.16dB(9k~150kHz Conduction 2#) 2.90dB(150k-30MHz Conduction 2#)
Radiated Emission Uncertainty (3m Chamber)	3.78dB (30M~1GHz Polarize: H) 4.27dB (30M~1GHz Polarize: V) 4.46dB (1~6GHz)

3. MEASURING DEVICE AND TEST EQUIPMENT

For Power Line Conducted Emission Measurement

Used	Equipment	Manufacturer	Model No.	Serial No.	Last Cal.	Cal. Interval
☑	Test Receiver	Rohde & Schwarz	ESCI	101384	May 15, 2021	1 Year
☑	L.I.S.N.	ROHDE & SCHWARZ	ENV216	5	May 15, 2021	1 Year
☑	50Ω Coaxial Switch	Anritsu	MP59B	M20531	May 15, 2021	1 Year
☑	Pulse Limiter	Rohde & Schwarz	ESH3-Z2	100006	May 15, 2021	1 Year

For Radiated Emission Measurement

Used	Equipment	Manufacturer	Model No.	Serial No.	Last Cal.	Cal. Interval
☑	EMI Test Receiver	Rohde & Schwarz	ESU	100154	May 15, 2021	1 Year
☑	Pre-Amplifier	Lunar EM	LNA30M3G-25	J10100000070	May 15, 2021	1 Year
☑	Bilog Antenna	Schwarzbeck	VULB9163	659	May 15, 2021	1 Year
☑	Pre-Amplifier	SKET.	LNPA_0118G-45	SK2019051801	May 15, 2021	1 Year
☑	Horn Antenna	Schwarzbeck	BBHA9120D	9120D-1177	May 15, 2021	1 Year

4. POWER LINE CONDUCTED EMISSION MEASUREMENT

3.1 Block Diagram of Test Setup

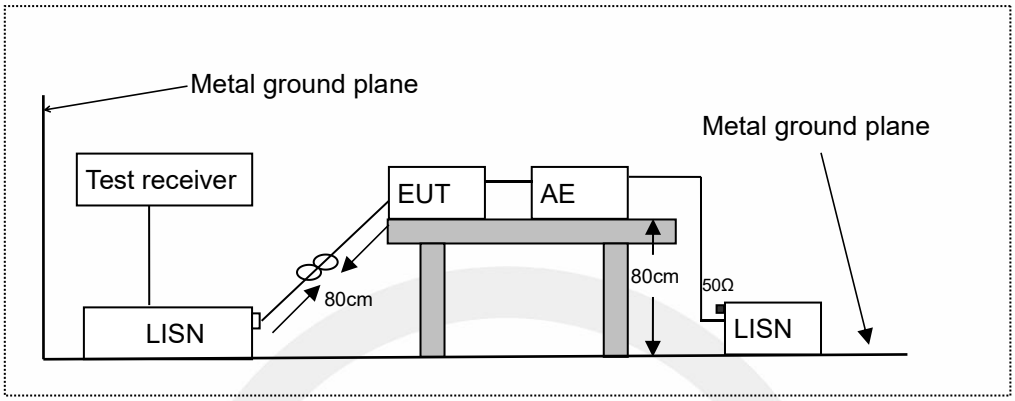

LISN: Line Impedance Stabilization Network
AE: Associated equipment
EUT: Equipment under test

3.2 Limits

FCC Part 15, Subpart B, Class B

Frequency (MHz)	Limit (dBμV)	
	Quasi-peak Level	Average Level
0.15 ~ 0.50	66.0 ~ 56.0 *	56.0 ~ 46.0 *
0.50 ~ 5.00	56.0	46.0
5.00 ~ 30.00	60.0	50.0
NOTE1-The lower limit shall apply at the transition frequencies. NOTE2-The limit decreases linearly with the logarithm of the frequency in the range 0.15MHz to 0.50MHz.		

3.3 Test Procedure

The EUT was placed on a desk 0.8 m height from the metal ground plane and 0.4 m from the conducting wall of the shielding room and it was kept at least 0.8 m from any other grounded conducting surface. The size of the table will nominally be 1.5 m x1.0 m.

The rear of the arrangement shall be flush with the back of the supporting tabletop unless that would not be possible or typical of normal use.

All units of equipment forming the system under test (includes the EUT as well as connected peripherals and associated equipment or devices) shall be arranged such that a nominal 0.1 m separation is achieved between the neighboring units.

Connect EUT to the power mains through a line impedance stabilization network (LISN). Where the mains cable supplied by the manufacturer is longer than 1 m, the excess should be folded at the

centre into a bundle no longer than 0.4 m, so that its length is shortened to 1 m.

All the support units are connecting to the other LISN.

The LISN provides 50 ohm coupling impedance for the measuring instrument.

Both sides of AC line were checked for maximum conducted interference.

The frequency range from 150 kHz to 30 MHz was sweep.

Set the test-receiver system to quasi peak detect function and average detect function, and to measure the conducted emissions values.

Test results were obtained from the following equation:
Emission Level (dBμV) = LISN Factor (dB) + Cable Loss (dB) + Reading (dBμV)
Margin (dB) = Emission Level (dBμV) - Limit (dBμV)

3.4 Measuring Results

Pass
All the modes were tested and the data of the worst modes are attached the following pages.

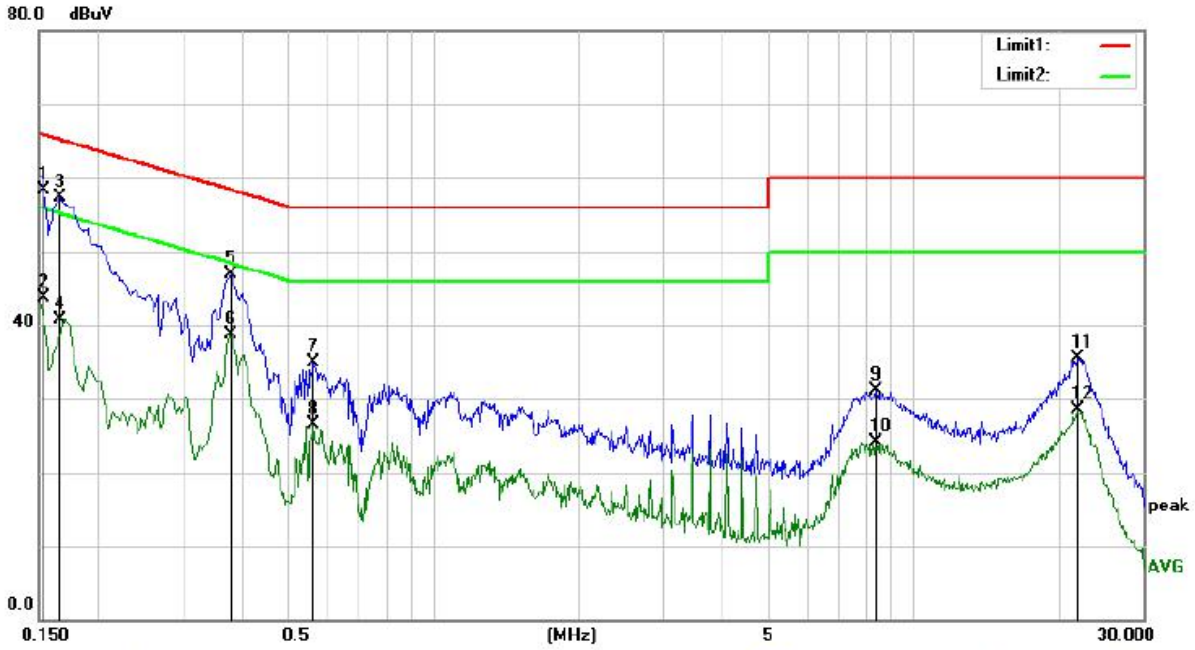

Site Conduction #2 Phase: *L1* Temperature: 24.4

Limit: (CE)FCC PART 15 class B_QP Power: AC 120V/60Hz Humidity: 52 %

Mode: CHARGING

Note:

No.	Mk.	Freq.	Reading Level	Correct Factor	Measure-ment	Limit	Over		
		MHz	dBuV	dB	dBuV	dBuV	dB	Detector	Comment
1	*	0.1540	47.74	10.48	58.22	65.78	-7.56	QP	
2		0.1540	33.30	10.48	43.78	55.78	-12.00	AVG	
3		0.1660	46.86	10.47	57.33	65.16	-7.83	QP	
4		0.1660	30.32	10.47	40.79	55.16	-14.37	AVG	
5		0.3780	36.47	10.38	46.85	58.32	-11.47	QP	
6		0.3780	28.29	10.38	38.67	48.32	-9.65	AVG	
7		0.5620	24.64	10.35	34.99	56.00	-21.01	QP	
8		0.5620	16.12	10.35	26.47	46.00	-19.53	AVG	
9		8.3580	20.41	10.69	31.10	60.00	-28.90	QP	
10		8.3580	13.43	10.69	24.12	50.00	-25.88	AVG	
11		22.0500	24.80	10.79	35.59	60.00	-24.41	QP	
12		22.0500	17.67	10.79	28.46	50.00	-21.54	AVG	

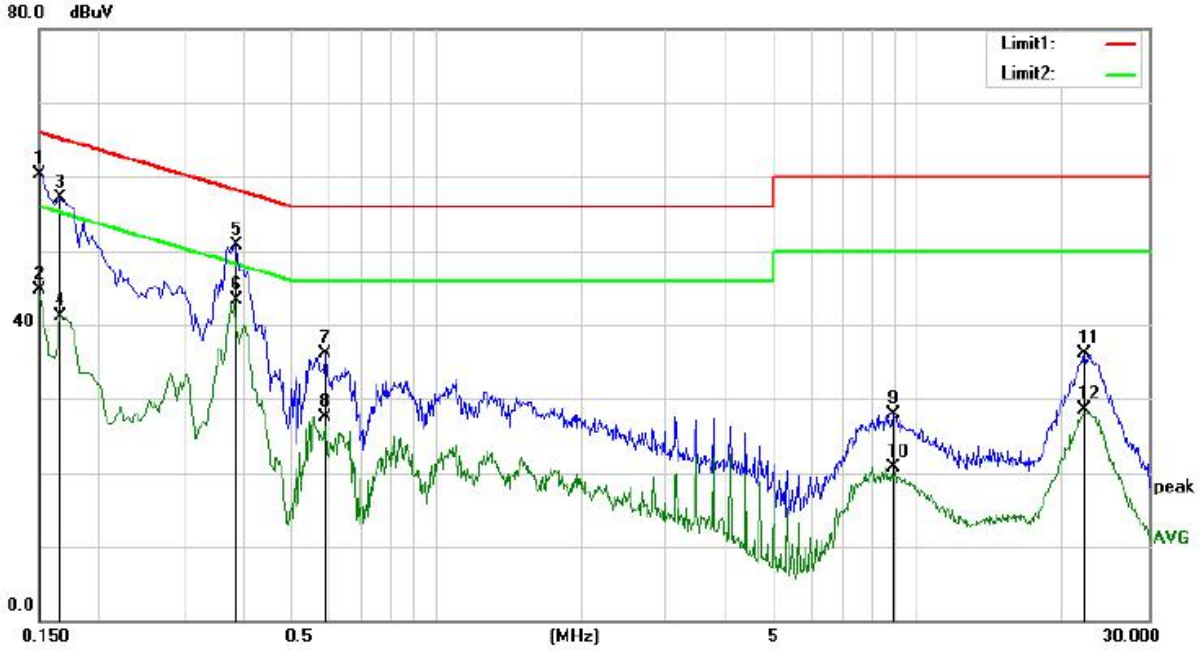

Site Conduction #2 Phase: N Temperature: 24.4

Limit: (CE)FCC PART 15 class B_QP Power: AC 120V/60Hz Humidity: 52 %

Mode: CHARGING

Note:

No.	Mk.	Freq.	Reading Level	Correct Factor	Measure-ment	Limit	Over		
		MHz	dBuV	dB	dBuV	dBuV	dB	Detector	Comment
1		0.1500	49.92	10.48	60.40	66.00	-5.60	QP	
2		0.1500	34.31	10.48	44.79	56.00	-11.21	AVG	
3		0.1660	46.59	10.47	57.06	65.16	-8.10	QP	
4		0.1660	30.59	10.47	41.06	55.16	-14.10	AVG	
5		0.3860	40.41	10.38	50.79	58.15	-7.36	QP	
6	*	0.3860	32.93	10.38	43.31	48.15	-4.84	AVG	
7		0.5900	25.73	10.35	36.08	56.00	-19.92	QP	
8		0.5900	17.12	10.35	27.47	46.00	-18.53	AVG	
9		8.9140	17.18	10.73	27.91	60.00	-32.09	QP	
10		8.9140	9.98	10.73	20.71	50.00	-29.29	AVG	
11		22.1780	25.34	10.80	36.14	60.00	-23.86	QP	
12		22.1780	17.63	10.80	28.43	50.00	-21.57	AVG	

5. RADIATED EMISSION MEASUREMENT (UP TO 1GHz)

5.1 Block Diagram of Test Setup

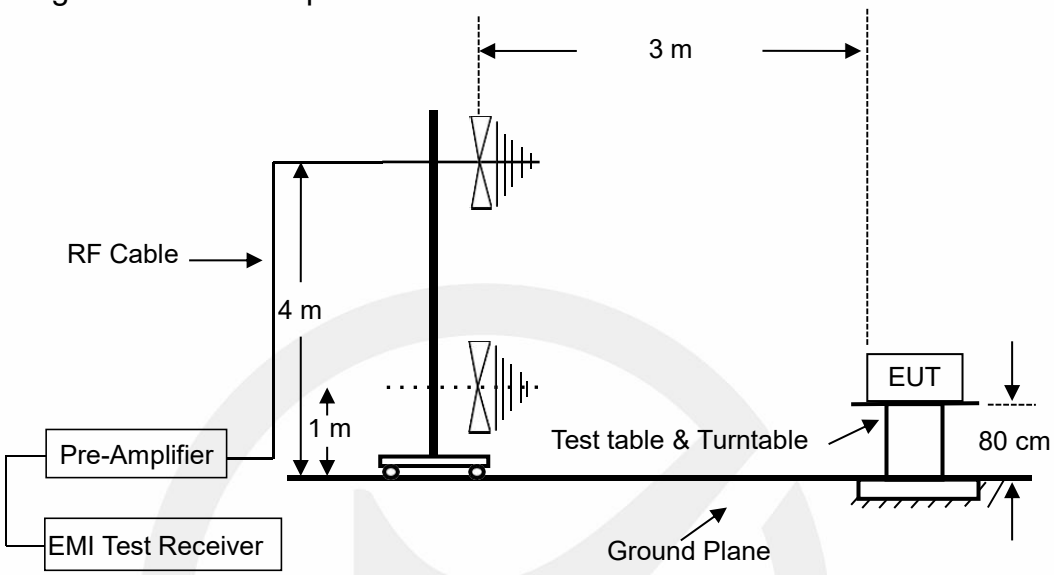

5.2 Radiated Limit

FCC Part 15, Subpart B, Class B

Frequency MHz	Distance Meters	Field Strengths Limit	
		μV/m	dB(μV)/m
30 ~ 88	3	100	40.0
88 ~ 216	3	150	43.5
216 ~ 960	3	200	46.0
960 ~ 1000	3	500	54.0

5.3 Test Procedure

The EUT was placed on a non-conductive table whose total height equaled 80cm. All units of equipment forming the system under test (includes the EUT as well as connected peripherals and associated equipment or devices) shall be arranged such that a nominal 0.1 m separation is achieved between the neighboring units. Where the mains cable supplied by the manufacturer is longer than 1 m, the excess should be folded at the centre into a bundle no longer than 0.4 m, so that its length is shortened to 1 m.

The EUT was set 3 meters away from the receiving antenna that was mounted on a non-conductive mast. The antenna can move up and down between 1 to 4 meters to find out the maximum emission level.

The turntable can rotate 360 degree to determine the position of the maximum emission level.

The initial testing identified the frequency that has the highest disturbance relative to the limit while operating the EUT in typical modes of operation and cable positions in a test setup representative of

typical system configuration.

The identification of the frequency of highest emission with respect to the limit was found by investigating emissions at a number of significant frequencies. The probable frequency of maximum emission had been found and that the associated cable and EUT configuration and mode of operation had been identified.

The bandwidth of the Receiver is set at 120 kHz.

Test results were obtained from the following equation:
Emission level (dBμV/m) = Antenna Factor -Amp Factor +Cable Loss + Reading
Margin (dB) = Emission Level (dBμV/m) - Limit (dBμV/m)

5.4 Measuring Results

PASS.

All the modes were tested and the data of the worst modes are attached the following pages.

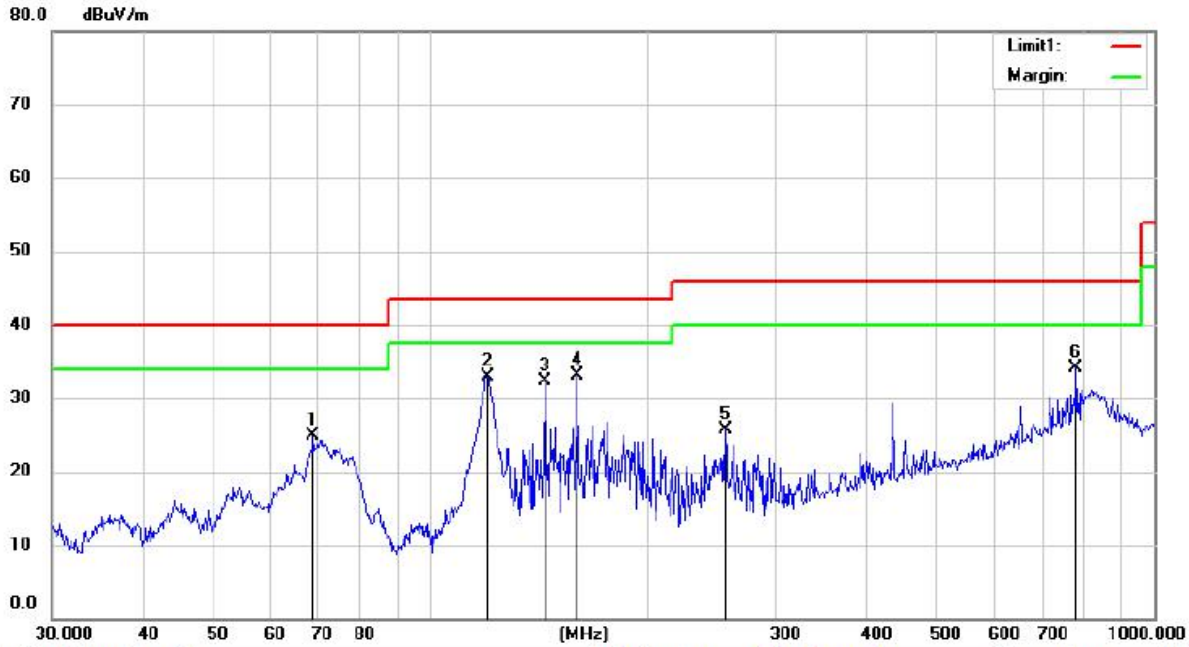

Site 3m Chamber #3 Polarization: *Horizontal* Temperature: 18.4 C

Limit: (RE)FCC PART 15 CLASS B Power: AC 120V/60Hz Humidity: 24 %

Mode: Charging

Note:

No.	Mk.	Freq.	Reading Level	Correct Factor	Measure-ment	Limit	Over		Antenna Height	Table Degree	
		MHz	dBuV	dB	dBuV/m	dBuV/m	dB	Detector	cm	degree	Comment
1		68.8721	40.59	-15.68	24.91	40.00	-15.09	QP			
2		119.8555	50.45	-17.46	32.99	43.50	-10.51	QP			
3		143.8294	49.87	-17.54	32.33	43.50	-11.17	QP			
4	*	159.7844	50.45	-17.27	33.18	43.50	-10.32	QP			
5		255.6230	40.37	-14.67	25.70	46.00	-20.30	QP			
6		779.6067	34.54	-0.34	34.20	46.00	-11.80	QP			

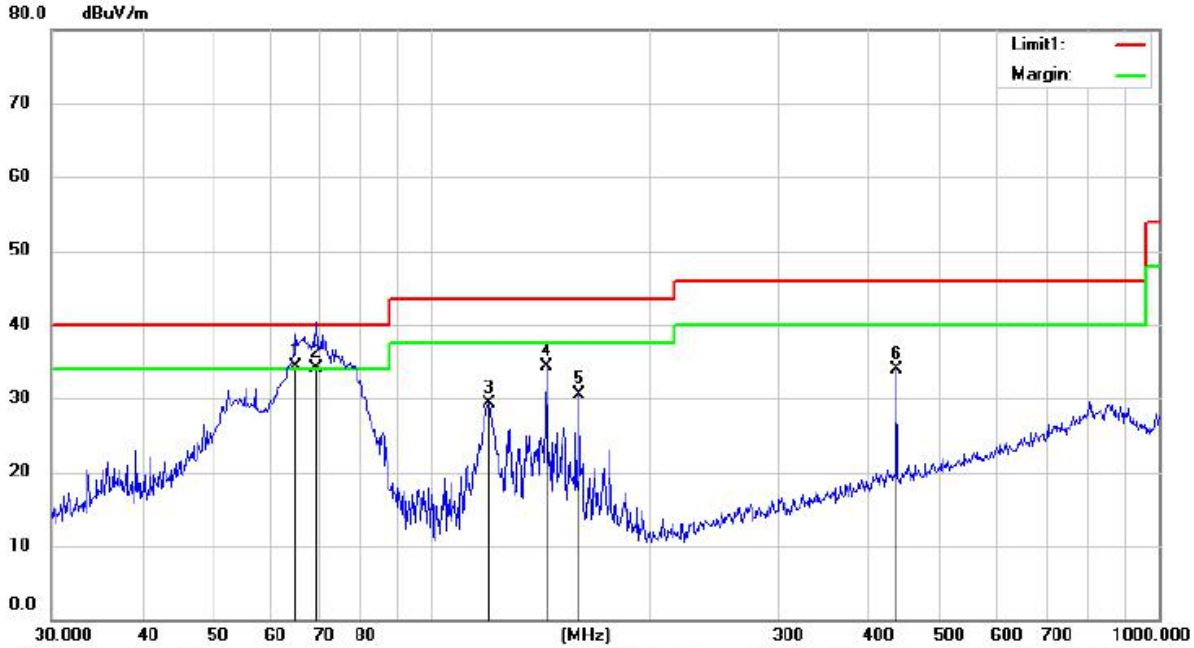

Site 3m Chamber #3 Polarization: *Vertical* Temperature: 18.4 C

Limit: (RE)FCC PART 15 CLASS B Power: AC 120V/60Hz Humidity: 24 %

Mode: Charging

Note:

No.	Mk.	Freq.	Reading Level	Correct Factor	Measure-ment	Limit	Over		Antenna Height	Table Degree	
		MHz	dBuV	dB	dBuV/m	dBuV/m	dB	Detector	cm	degree	Comment
1	*	65.1145	49.28	-14.88	34.40	40.00	-5.60	QP			
2	!	69.3568	49.99	-15.79	34.20	40.00	-5.80	QP			
3		119.8555	46.69	-17.46	29.23	43.50	-14.27	QP			
4		143.8294	51.92	-17.54	34.38	43.50	-9.12	QP			
5		159.7844	47.84	-17.27	30.57	43.50	-12.93	QP			
6		435.5898	42.37	-8.55	33.82	46.00	-12.18	QP			

6. RADIATED EMISSION MEASUREMENT (ABOVE 1GHz)

6.1 Block Diagram of Test Setup

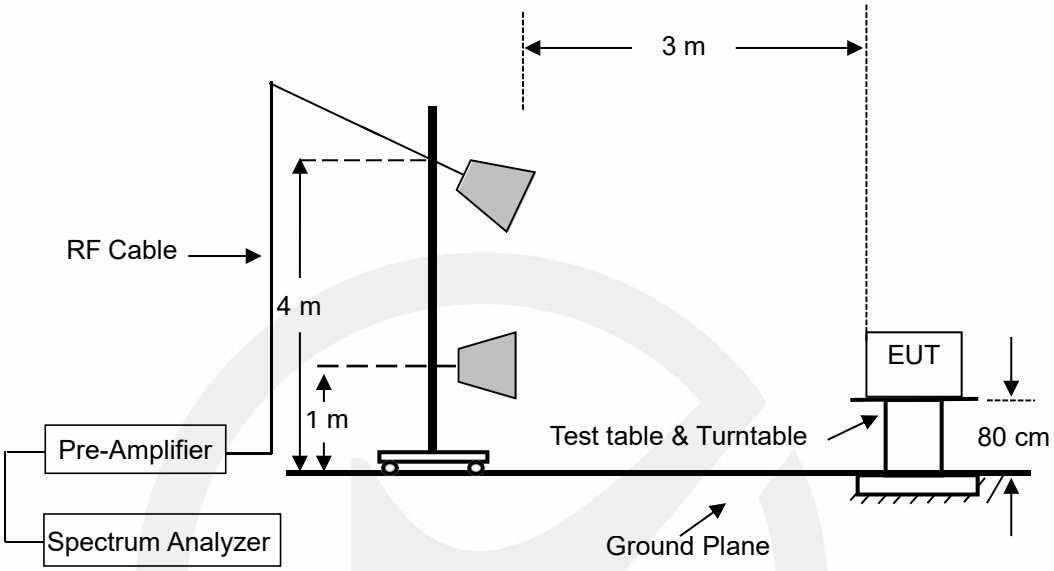

6.2 Radiated Limit

FCC Part 15, Subpart B, Class B

Frequency range GHz	Average limit dB(μV/m)	Peak limit dB(μV/m)
Above 1000	54	74
Note: The highest internal source of an EUT is defined as the highest frequency generated or used in the device or on which the EUT operates or tunes. If the highest frequency of the internal sources of the EUT is less than 1.705 MHz, the measurement shall only be made up to 30 MHz. If the highest frequency of the internal sources of the EUT is between 1.705 MHz and 108 MHz, the measurement shall only be made up to 1 GHz. If the highest frequency of the internal sources of the EUT is between 108 MHz and 500 MHz the measurement shall only be made up to 2 GHz. If the highest frequency of the internal sources of the EUT is between 500 MHz and 1 GHz, the measurement shall only be made up to 5 GHz. If the highest frequency of the internal sources of the EUT is above 1 GHz, the measurement shall be made up to 5 times the highest frequency or 40 GHz, whichever is less.		

6.3 Test Procedure

The EUT was placed on a non-conductive table whose total height equaled 80cm. All units of equipment forming the system under test (includes the EUT as well as connected peripherals and associated equipment or devices) shall be arranged such that a nominal 0.1 m separation is achieved between the neighboring units. Where the mains cable supplied by the manufacturer is longer than 1 m, the excess should be folded at the centre into a bundle no longer than 0.4 m, so that its length is shortened to 1 m.

The EUT was set 3 meters away from the receiving antenna that was mounted on a non-conductive mast. The antenna can move up and down between 1 to 4 meters to find out the maximum emission level.

The turntable can rotate 360 degree to determine the position of the maximum emission level.

The initial testing identified the frequency that has the highest disturbance relative to the limit while operating the EUT in typical modes of operation and cable positions in a test setup representative of typical system configuration.

The identification of the frequency of highest emission with respect to the limit was found by investigating emissions at a number of significant frequencies. The probable frequency of maximum emission had been found and that the associated cable and EUT configuration and mode of operation had been identified.

The frequency range above 1GHz the measuring instrument use RBW=1 MHz and VBW=3 MHz with peak detector for peak values, and use RBW=1 MHz and VBW=10 Hz with peak detector for Average Values.

Test results were obtained from the following equation:
Emission level (dBμV/m) = Antenna Factor - Amp Factor +Cable Loss + Reading
Margin (dB) = Emission Level (dBμV/m) - Limit (dBμV/m)

6.4 Measuring Results

PASS.

All the modes were tested and the data of the worst modes are attached the following pages.

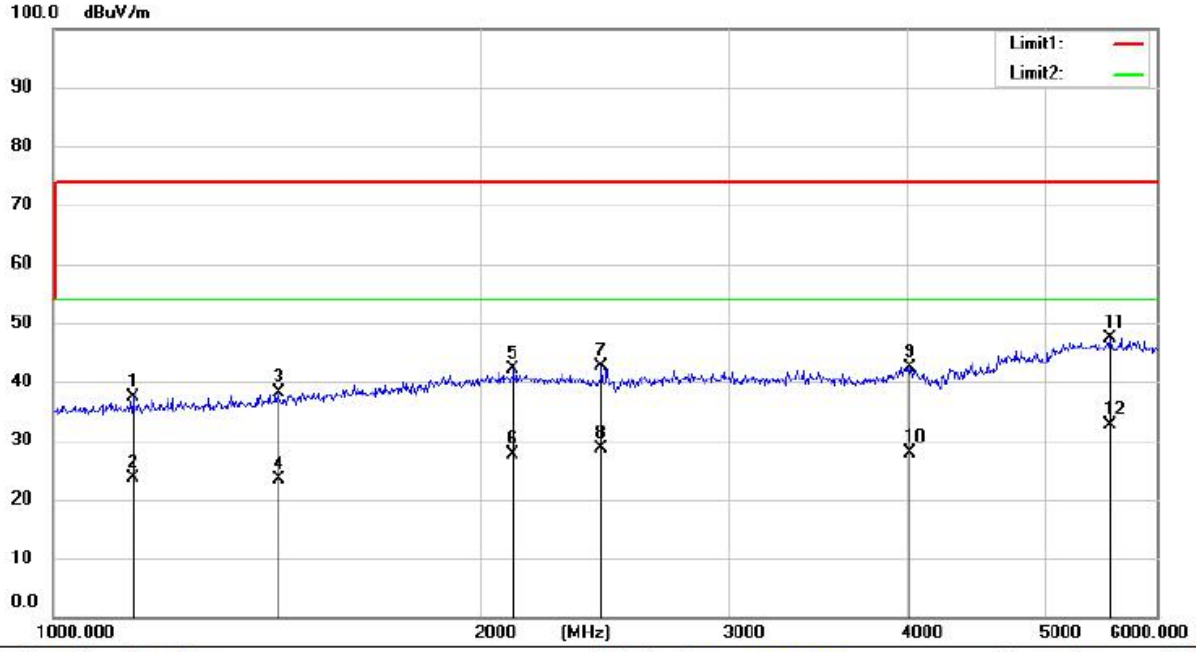

Site 3m Chamber #3 Polarization: *Vertical* Temperature: 18.4 C

Limit: (RE)FCC PART 15 CLASS B Power: AC 120V/60Hz Humidity: 24 %

Mode: Charging

Note:

No.	Mk.	Freq.	Reading Level	Correct Factor	Measure-ment	Limit	Over		Antenna Height	Table Degree	
		MHz	dBuV	dB	dBuV/m	dBuV/m	dB	Detector	cm	degree	Comment
1		1137.698	54.53	-17.16	37.37	74.00	-36.63	peak			
2		1137.698	40.72	-17.16	23.56	54.00	-30.44	AVG			
3		1441.262	54.33	-16.13	38.20	74.00	-35.80	peak			
4		1441.262	39.60	-16.13	23.47	54.00	-30.53	AVG			
5		2111.004	55.02	-12.95	42.07	74.00	-31.93	peak			
6		2111.004	40.60	-12.95	27.65	54.00	-26.35	AVG			
7		2436.358	55.62	-12.94	42.68	74.00	-31.32	peak			
8		2436.358	41.68	-12.94	28.74	54.00	-25.26	AVG			
9		4016.478	51.87	-9.55	42.32	74.00	-31.68	peak			
10		4016.478	37.40	-9.55	27.85	54.00	-26.15	AVG			
11		5565.048	52.41	-4.91	47.50	74.00	-26.50	peak			
12	*	5565.048	37.55	-4.91	32.64	54.00	-21.36	AVG			

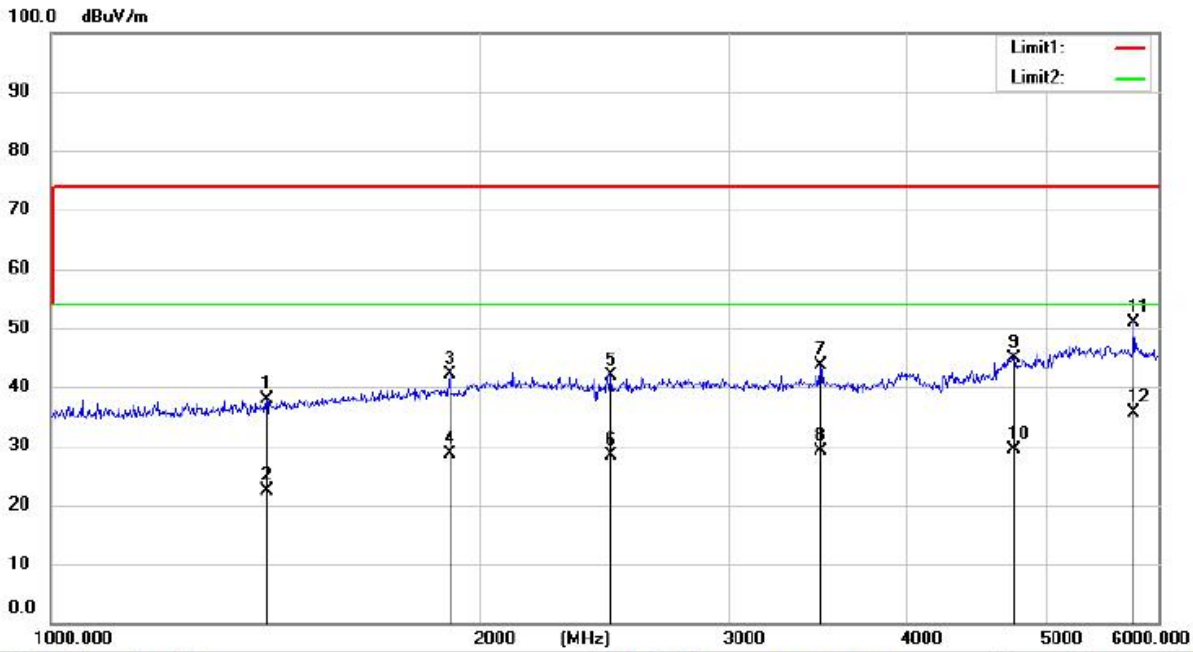

Site 3m Chamber #3 Polarization: *Horizontal* Temperature: 18.4 C

Limit: (RE)FCC PART 15 CLASS B Power: AC 120V/60Hz Humidity: 24 %

Mode: Charging

Note:

No.	Mk.	Freq.	Reading Level	Correct Factor	Measure-ment	Limit	Over		Antenna Height	Table Degree	
		MHz	dBuV	dB	dBuV/m	dBuV/m	dB	Detector	cm	degree	Comment
1		1418.207	54.02	-16.25	37.77	74.00	-36.23	peak			
2		1418.207	38.66	-16.25	22.41	54.00	-31.59	AVG			
3		1906.051	55.63	-13.56	42.07	74.00	-31.93	peak			
4		1906.051	42.20	-13.56	28.64	54.00	-25.36	AVG			
5		2475.965	54.73	-12.93	41.80	74.00	-32.20	peak			
6		2475.965	41.40	-12.93	28.47	54.00	-25.53	AVG			
7		3473.882	55.86	-12.14	43.72	74.00	-30.28	peak			
8		3473.882	41.38	-12.14	29.24	54.00	-24.76	AVG			
9		4753.260	52.42	-7.52	44.90	74.00	-29.10	peak			
10		4753.260	36.93	-7.52	29.41	54.00	-24.59	AVG			
11		5768.089	55.65	-4.89	50.76	74.00	-23.24	peak			
12	*	5768.089	40.63	-4.89	35.74	54.00	-18.26	AVG			

7. PHOTOGRAPHS

7.1 Photos of Conducted Emission Measurement

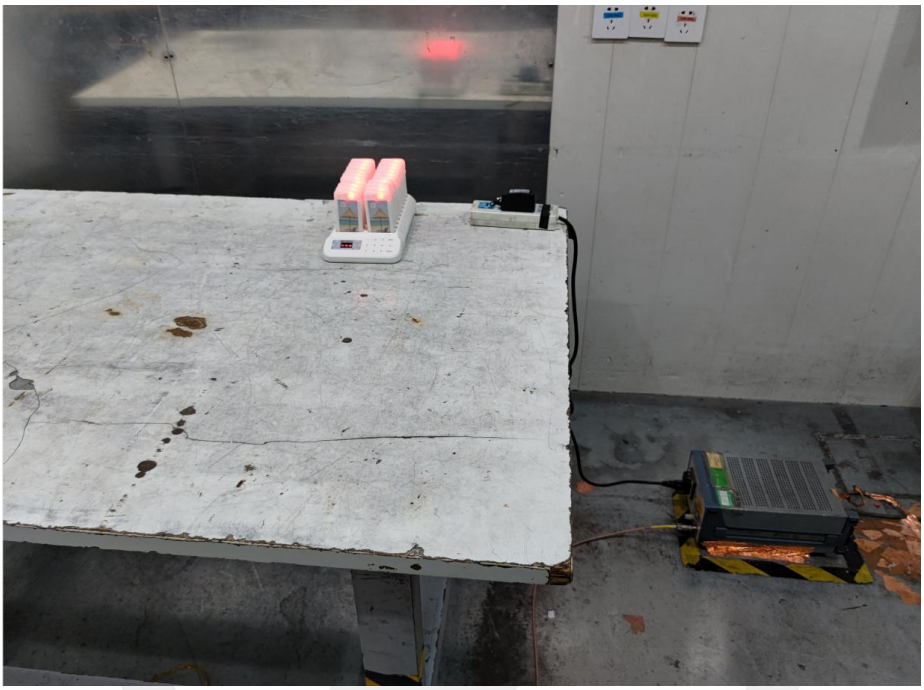

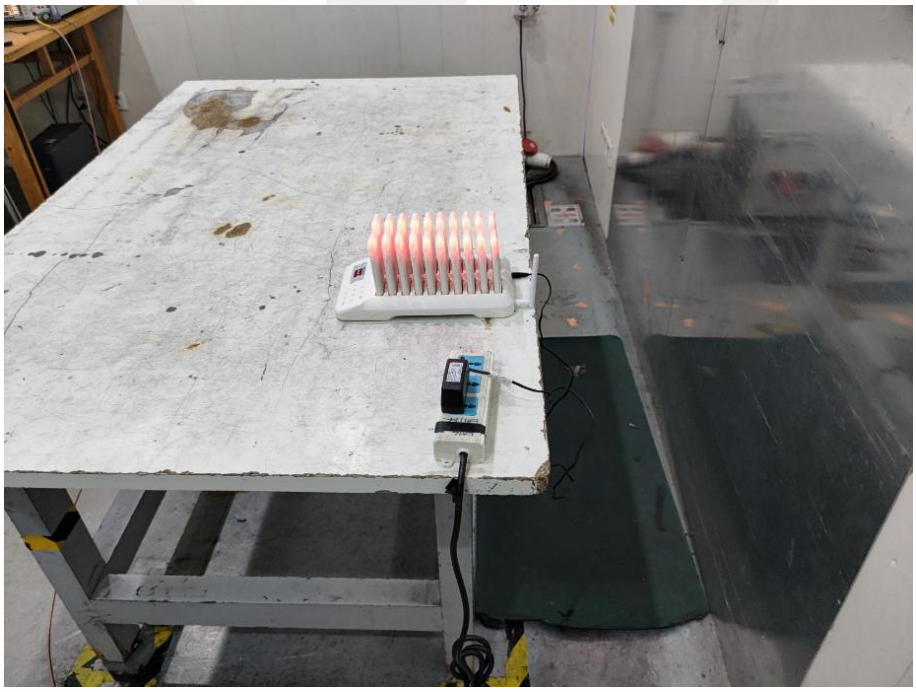

7.2 Photos of Radiation Emission Measurement

Spurious Emission Test Setup (Below 1GHz)

Spurious Emission Test Setup (Above 1GHz)

APPENDIX A: Label Requirements

(1) Receivers associated with the operation of a licensed radio service, e.g., FM broadcast under part 73 of this chapter, land mobile operation under part 90 of this chapter, etc., shall bear the following statement in a conspicuous location on the device:
This device complies with part 15 of the FCC Rules. Operation is subject to the condition that this device does not cause harmful interference.

(2) A stand-alone cable input selector switch, shall bear the following statement in a conspicuous location on the device:
This device complies with part 15 of the FCC Rules for use with cable television service.

(3) All other devices shall bear the following statement in a conspicuous location on the device:
This device complies with part 15 of the FCC Rules. Operation is subject to the following two conditions: (1) This device may not cause harmful interference, and (2) this device must accept any interference received, including interference that may cause undesired operation.

APPENDIX B: Warning Statement

(a) For a Class A digital device or peripheral, the instructions furnished the user shall include the following or similar statement, placed in a prominent location in the text of the manual:

NOTE: This equipment has been tested and found to comply with the limits for a Class A digital device, pursuant to part 15 of the FCC Rules. These limits are designed to provide reasonable protection against harmful interference when the equipment is operated in a commercial environment. This equipment generates, uses, and can radiate radio frequency energy and, if not installed and used in accordance with the instruction manual, may cause harmful interference to radio communications. Operation of this equipment in a residential area is likely to cause harmful interference in which case the user will be required to correct the interference at his own expense.

(b) For a Class B digital device or peripheral, the instructions furnished the user shall include the following or similar statement, placed in a prominent location in the text of the manual:

NOTE: This equipment has been tested and found to comply with the limits for a Class B digital device, pursuant to part 15 of the FCC Rules. These limits are designed to provide reasonable protection against harmful interference in a residential installation. This equipment generates uses and can radiate radio frequency energy and, if not installed and used in accordance with the instructions, may cause harmful interference to radio communications. However, there is no guarantee that interference will not occur in a particular installation. If this equipment does cause harmful interference to radio or television reception, which can be determined by turning the equipment off and on, the user is encouraged to try to correct the interference by one or more of the following measures:
—Reorient or relocate the receiving antenna.
—Increase the separation between the equipment and receiver.
—Connect the equipment into an outlet on a circuit different from that to which the receiver is connected.
—Consult the dealer or an experienced radio/TV technician for help.

APPENDIX C: Photos of EUT

EUT View 1

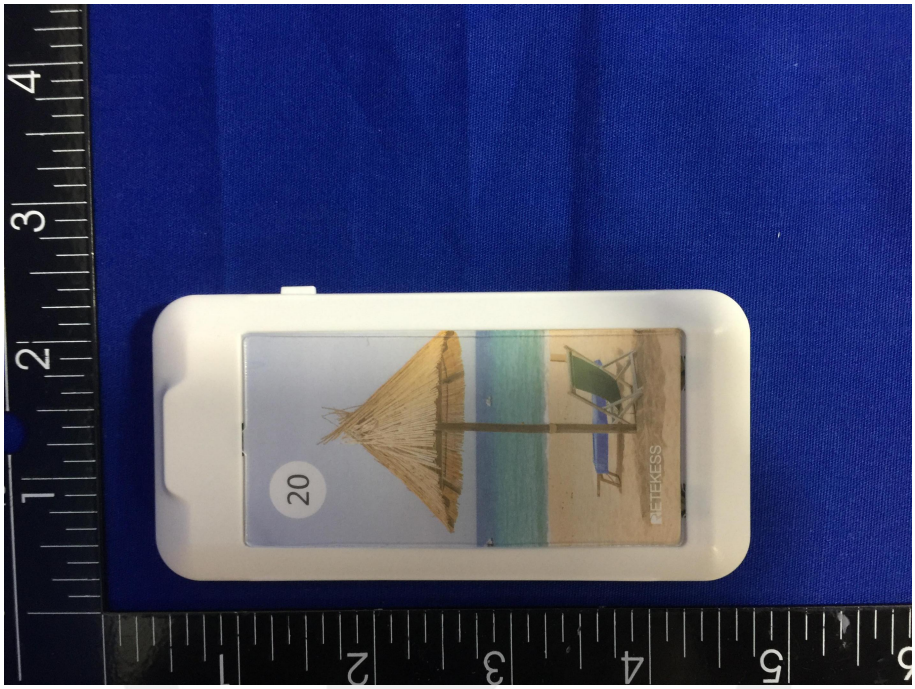

EUT View 2

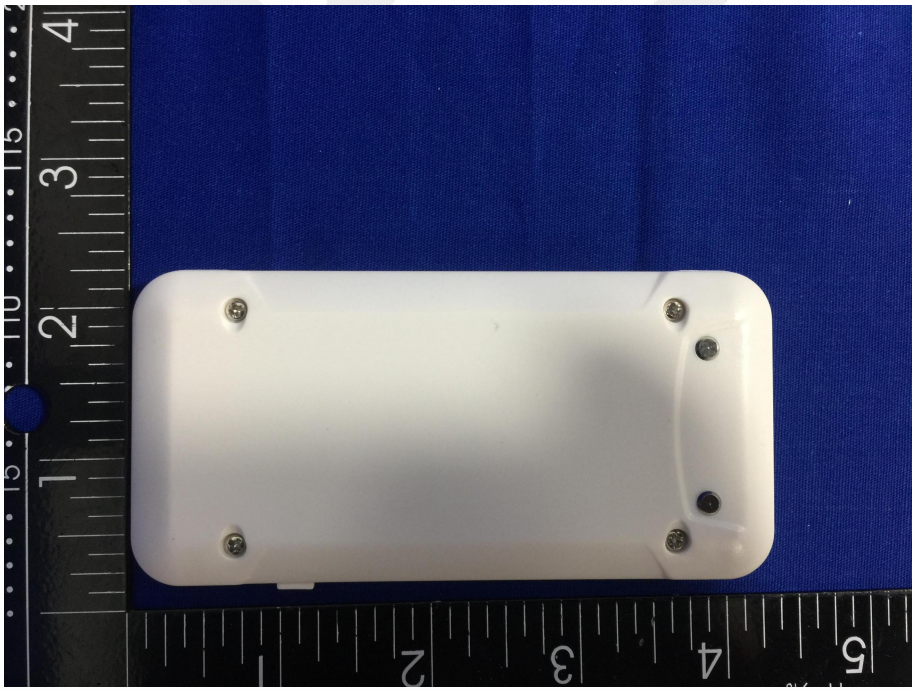

EUT View 3

EUT View 4

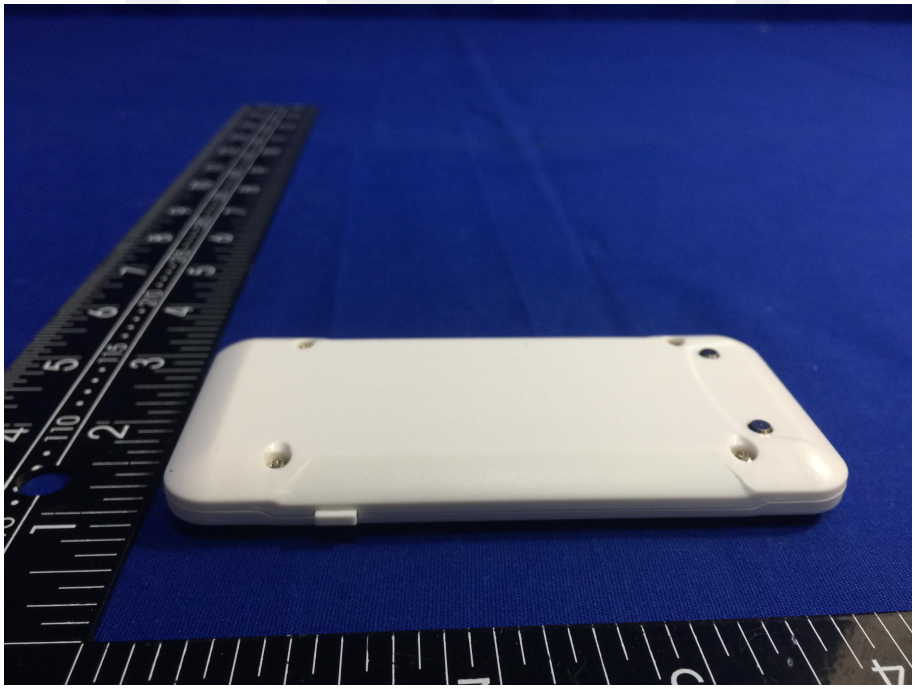

EUT View 5

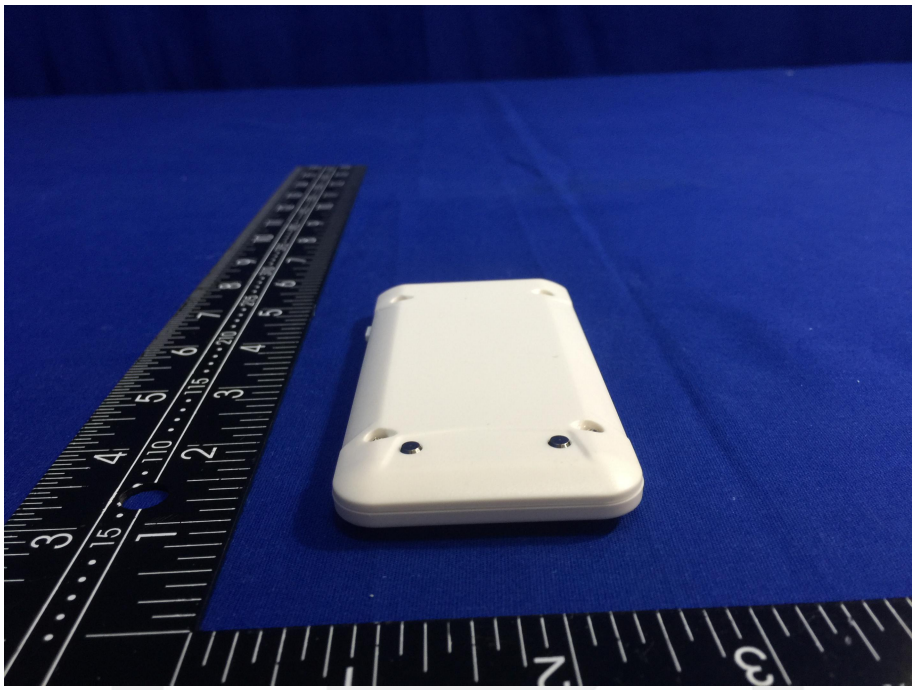
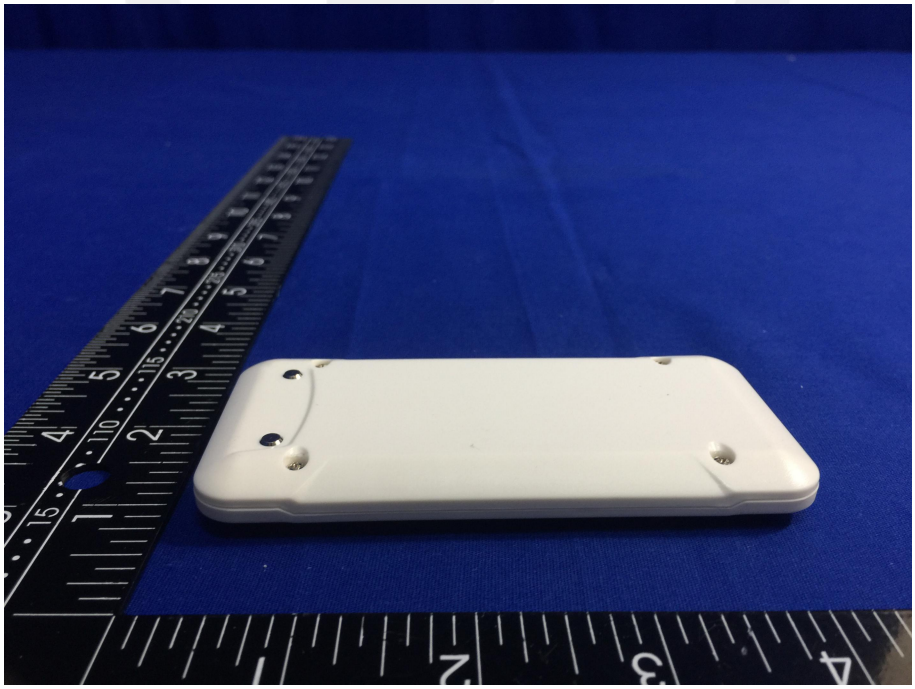
EUT View 6