RC Logger®

GB Operating instructions

88016RC (RtF) / 88018RC (ArF)

Navigator 250

EVER WONDERED WHAT INNOVATION LOOKS LIKE?

Navigator 250.

Table of contents

1. Introduction 6
2. Latest operating instructions 6
3. Terminology 6
4. Product description 6
5. Symbols 7
6. Intended use 7
7. Delivery contents 7
8. Parts and components 8
9. Dimensions 9
10. Video instructions 10
11. Firmware 10
12. Safety instructions 10
12.1 Persons/Product 10
12.2 Before commissioning 11
12.3 During operation 11
12.4 Outdoor flying locations 11
12.5 Batteries 11
12.5.1 General information 11
12.5.2 LiPo batteries 12
12.6 Propellers 13
12.7 Miscellaneous 14
13. Protect your model 14
13.1 Safety features 14
13.2 Accident prevention 14
13.2.1 Learn from experienced pilots 14
13.3 Emergency stop 14
13.4 Lost locator 15
13.5 LED – Status/Indications 15
13.6 Electrical/electronic components 15
14. Getting the Navigator 250 into the air 17
14.1 Antenna 17
14.2 Unfolding 17
14.3 Charge battery 17
14.4 Install battery 18
14.5 Calibrating and channel learning 18
14.6 Installing the propellers 18
14.7 FPV camera 19
14.7.1 Camera control and settings 19
14.8 Video TX 20
14.8.1 Default channel 20
14.8.2 Switch channel 20
14.8.3 Connecting FPV goggles 20
14.9 Controls 21
14.10 Fly it 22
14.11 Status indications 22
14.12 ArF version 22
15. EYEControl:Navigator app 22
15.1 Pairing with Navigator 250 22
16. Calibration 24
16.1 Preparation 24
16.2 How the calibration button works 24

16.3 Entering calibration mode 24
16.4 Calibration indicators 24
16.5 Step 1: Channel learning 25
16.6 Step 2: Gyro calibration 26
16.7 Step 3: Compass calibration 26
16.8 If compass calibration fails 27

17. Flying the Navigator 250 27
17.1 Visual inspection 27
17.2 Placement at start position 27
17.3 Stick controls 27
17.4 Flying 27
17.4.1 Trimming 28

18. Selecting a flight mode 28
18.1 GPS mode 28
18.2 Basic mode 28
18.3 Expert mode 28
18.3.1 Summary 28
18.3.2 Stick control 29
18.3.3 High and Low rates 29

19. Selecting agility 29

20. R.T.H. 29
20.1 Auto triggers 29
20.2 Manual trigger 30
20.3 Procedure 30
20.4 Fixing the 'Home' location 30
20.5 The importance of the GPS signal 30

21. Geofence and distance fence 31

22. Low Altitude Control – Min. height 32
22.1 Avoid crashes 32

23. Maintenance, care and repair 32
23.1 Regular cleaning and maintenance 32
23.1.1 Cleaning 32
23.1.2 Maintenance and repairs 32
23.2 Drift 32
23.3 After a crash 33

24. Firmware update 33
24.1 Preparation 33

25. Trouble shooting 34
25.1 Re-binding transmitter and receiver 34
25.1.1 Preparing the transmitter (Tx) 34
25.1.2 Binding 34
25.2 Telemetry data missing 34

26. Terms 34

27. Technical data 35

28. Status indication table 36

29. Spare parts 38

30. Compatible accessories 38

31. Disposal 38
31.1 General 38
31.2 Batteries 38

32. Declaration of Conformity 39

33. FCC Note 39

34. Product support 40

35. Legal notes 40

1. Introduction

Dear customer,

Thank you for making the excellent decision to purchase this RC Logger® product. You now have a high-quality product with a name that represents outstanding products.

This product complies with the applicable National and European standards and regulations. We kindly request the user to follow the operating instructions, to preserve this condition and to ensure safe operation! These operating instructions relate to this product. They contain important notices on commissioning and handling. Please take this into consideration when you pass the product on to third parties.

Please keep these instructions for future reference!

All company names and product designations contained herein are trademarks of the respective owners. All rights reserved.

We wish you a great deal of enjoyment with your new RC Logger® product!

2. Latest operating instructions

Please download the latest version of the operating instructions from our website at www.rclogger.com. Navigate to the product page and open the 'Downloads' tab. Click on "Operating instructions" to start the download.

3. Terminology

For some sections an understanding of terminology is required.

Refer to chapter '26. Terms' on page 34 for more information.

4. Product description

Designed specifically for individuals wanting to experience and learn from a pilot's perspective, the RC EYE Navigator is a safe, fun and intuitive solution to step into FPV; complete and ready to fly. Thanks to a fully integrated First-Person-View (FPV) vision system!

The Navigator features a built-in high quality camera with a 5.8 GHz video transmitter that delivers real-time, gimbal-stabilized high definition images so you can clearly see where you're flying. The integrated LED lights make it easy to see the orientation from a distance, day and night.

The Intelligent Relative Positioning Control (I.R.P.C.) technology will respond to control stick inputs relative to the pilot's location, regardless of where the unit is heading. Additionally, the RC EYE Navigator allows for a programmable flight path including altitude, position-hold and innovative automatic Task Point Command System (T.P.C.S.) via the integrated GPS, compass and barometric sensor. Note that I.R.P.C./ T.P.C.S. are not available in the first release.

Once you feel ready, you can customize flight characteristics such as flight agility, path setting and functional-channel assignment via iOS and Android devices.

The RC EYE Navigator also comes with an easy-to-change battery out of the box that features a fast release button and a secure-locking mechanism. Additionally, the brushless motors include an emergency power-off function that can stop the quadcopter immediately providing a balance of both sufficient power and uncompromised safety.

This ultra-portable, carbon-fibre and composite-material quadcopter features folding arms and legs. It comes with propeller guards to protect the Navigator as you learn how to fly. The inclusive full pilot-assist offers safe, easy-to-use features including GPS navigation allowing you to leverage until you're ready to take full manual control.

With the EYEControl: Navigator App you are instantly connected via Bluetooth® (max. 10 m) allowing you to tune the Navigator exactly how you want it. With adjustments of features like Low Altitude Control (minimum flying height), camera tilt auto stabilization enable/disable, Return-to-Home, Geo Fence settings, and much more you can make the Navigator completely yours!

5. Symbols

BLUE provides you with additional useful information, and highlights important facts.

RED stands for danger and alert. Read these sections always to avoid accidents and product damage.

GREEN stands for user safety. GREEN also stands for good practice, protecting your product from damage.

6. Intended use

The Navigator 250 is a model quad copter solely designed for private use in the model making area and the operating times associated with this. The Navigator 250 is not suitable for other types of use, including commercial applications.

Any use other than the one described can damage the device. Moreover, this involves dangers such as short circuit, fire and electric shock, etc. Observe the safety information under all circumstances! The product must not become damp or wet.

This product is not a toy and not suitable for children under the age of 14.

For safety and approval purposes, you must not rebuild and/or modify this product. If you use the product for purposes other than those described above, the product may be damaged. In addition, improper use can cause hazards such as short circuiting, fire, electric shock etc. Read the instructions carefully and keep them.

Make this product available to third parties only together with its operating instructions.

7. Delivery contents

1 x RC EYE Navigator 250

1 x HD FPV Camera (pre-installed)

1 x Video Transmitter (pre-installed)

1 x GPS module (pre-installed)

1 x Propeller Set (pre-installed)

1 x Propeller Guard Set

1 x R8 Radio System

1 x Neck Strap

1 x Navigator Battery

1 x LiPo/LiFe Balance Charger

4 x Power cord for charger (4 versions)

1 x Charging and balancing cable set

2 x XT60 battery cap set

1 x Small parts: spare screws/cable/propeller mount

1 x Hex screw driver

1 x Quick start guide

8. Parts and components

(Propeller guards not shown)

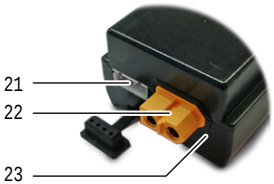

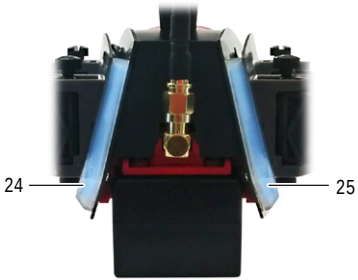

1 GPS module
2 Canopy
3 Right side panel
4 Front arm LED
5 Camera hatch
6 Camera
7 Front propeller
8 Antenna
9 Rear LED
10 Rear propeller
11 Rear arm LED
12 Leg
13 Arm
14 Motor arm lock
15 Propeller mount plate
16 Motor
17 Motor mount
18 Battery release button
19 Battery connector
20 Antenna socket
21 Balancer socket
22 Battery plug
23 Flight battery
24 Emergency stop/ pairing button
25 Emergency stop/ Calibration button

9. Dimensions

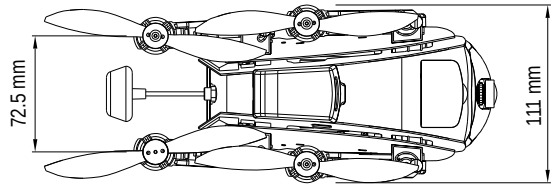

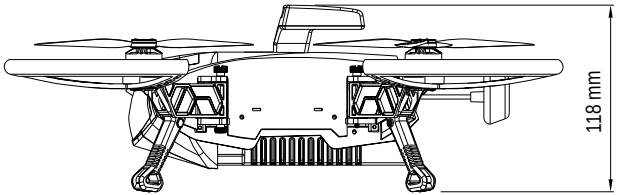

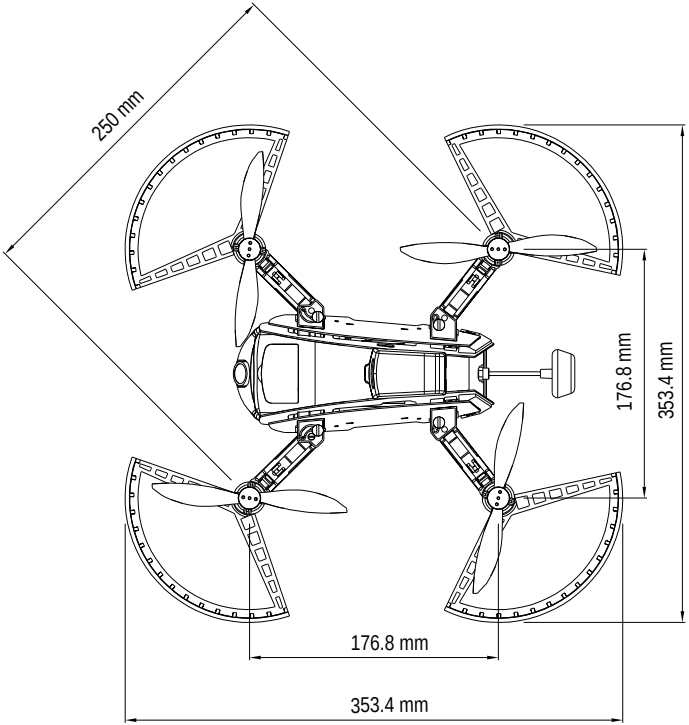

10. Video instructions

We provide video instructions and tutorials for setting up, calibrating and operating the Navigator 250. Visit https://vimeo.com/rclogger for more information.

11. Firmware

RC Logger strives to continuously improve its products. For this reason, the firmware of the Navigator 250 is being updated and improved to keep you as a customer happy. Future firmware versions may change, improve or enhance functions. New firmware versions with instructions are made available to you for download from www.rclogger.com.

The firmware can be updated by the user. Refer to '24. Firmware update' on page 33.

12. Safety instructions

Read the operating instructions carefully and especially observe the safety instructions. If you do not follow the safety instructions and information on proper handling in this manual, we assume no liability for any resulting personal injury or damage to property. Such cases will invalidate the warranty/guarantee.

12.1 Persons/Product

- The device is not a toy. Keep it out of the reach of children and pets.
- Do not leave packaging material lying around carelessly. These may become dangerous playing material for children.
- If it is no longer possible to operate the product safely, take it out of operation and protect it from any accidental use. Safe operation can no longer be guaranteed if the product:
  - is visibly damaged,
  - is no longer working properly,
  - has been stored for extended periods in poor ambient conditions, or
  - has been subjected to any serious transport-related stresses. The product must not become damp or wet. The Navigator 250 uses delicate electronic components which are sensitive to temperature fluctuations and are optimised for a particular temperature range. Observe the operating temperature range given in the technical data.
- Do not place the product under any mechanical stress.
- Handle the product carefully. Jolts, impacts or a fall even from a low height can damage the product.

12.2 Before commissioning

- Before every flight, check the functional reliability of your model and the transmitter. Watch out for any visible damage such as defective plug connections or damaged cables and wires.
- All moving parts of the model must run smoothly but should not have any play in their bearings.
- Before each operation check the correct and secure position of the propellers.
- Charge the flight battery.
- Ensure sufficient residual capacity [battery tester (not included)] of the batteries inserted in the transmitter. If the batteries are empty, always replace the complete set, never individual cells only.
- Always switch on the transmitter first before connecting the battery to the Navigator 250.
- Set the throttle to zero before connecting the battery to the Navigator 250. The motors might run unintentionally!

12.3 During operation

- When the motors are running, make sure that neither objects nor body parts are in the rotating and suction area of the propellers.
- Do not take any risks when operating the model! Your own safety and that of your environment is solely down to you being responsible when dealing with the model.
- Improper operation may cause serious injury and property damage! Therefore make sure to keep a sufficiently safe distance to persons, animals or objects during operation.
- Select an appropriate location for the operation of the Navigator 250.
- Fly the Navigator 250 only if your ability to respond is unrestricted. The influence of tiredness, alcohol or medication can cause incorrect responses.
- Do not direct your model towards spectators or yourself.
- Motor, electronics and flight battery may heat up during operation. Wait 5 to 10 minutes before recharging or replacing the flight battery.
- Never switch off the transmitter while the Navigator 250 is in use. After landing, always disconnect the flight battery first. Only then may the transmitter be switched off.
- In case of a defect or a malfunction, remove the problem before using the Navigator 250 again.
- Never expose the Navigator 250 or the transmitter to direct sunlight or excessive heat for an extended period of time.
- In the case of a severe crash (e.g. from a high altitude) the electric gyro sensors can be damaged and/or misadjusted. Therefore, full functionality must be tested before flying again without fail!
- In the event of a crash, the throttle should be immediately set to zero. Rotating propellers may be damaged if they come into contact with obstacles. Before flying again, these should be checked for possible tears or breakages!
- Observe the warn/safety signals emitted by the Navigator 250 at all times to avoid damage (e.g. discharged battery).

12.4 Outdoor flying locations

- Always and only operate the Navigator 250 in a designated RC flying area.
- Stay away from power lines, cellphone towers and other sources of potential interference, and restricted areas.
- Never fly the Navigator 250 above people.
- Contact a local RC club nearby to find out more about designated and approved flying areas.

12.5 Batteries

12.5.1 General information

- Correct polarity must be observed while inserting batteries.
- Remove the flight battery from the Navigator 250 after every flight.
- Remove the batteries from the transmitter if you do not use it for a longer period of time. Discharged batteries may leak.

- Leaking or damaged batteries can cause acid burns when in contact with skin. Therefore use suitable protective gloves to handle corrupted and leaking batteries.
- Batteries must be kept out of the reach of children. Do not leave the batteries lying around. There is a risk that children or pets may swallow them.
- All batteries should be replaced at the same time. Mixing old and new batteries can lead to battery leakage and device damage.
- Batteries must not be dismantled, short-circuited or exposed to fire. Never recharge non-rechargeable batteries. There is a risk of explosion!
- Never mix regular batteries and rechargeable batteries!

12.5.2 LiPo batteries

After the flight, the LiPo flight battery must be disconnected from the Navigator 250.

Lithium is a highly reactive chemical element with a high energy density. In the case of overcharging, the LiPo rechargeable battery packs might catch fire or even explode. Therefore, LiPo rechargeable battery packs must always be put on a fire-proof surface for charging and the charging process must be supervised.

In no case must the maximum permissible battery pack temperature of +60°C be exceeded. Otherwise the rechargeable battery may explode!

CAUTION:
Risk of explosion if battery is replaced by an incorrect type. Dispose of used batteries according to the instructions.

Hazards of LiPo flight batteries

- Do not leave the LiPo flight battery connected when you do not use it (e.g. during transport or storage). Otherwise, the LiPo flight battery may be fully discharged. This would destroy it and render it unusable! There is also a danger of malfunction due to interference. The rotors could start up inadvertently and cause damage or injury.
- Rechargeable LiPo batteries are very susceptible to moisture due to the chemicals they contain! Do not expose them to moisture or liquids. Risk of explosion!
- Do not expose the charger or LiPo flight battery to high/low temperatures or to direct solar radiation. When handling LiPo batteries, observe the special safety information of the battery manufacturer!
- Never charge the LiPo flight battery immediately after use. Always leave the LiPo flight battery to cool off first (at least 5-10 minutes).
- Only charge intact and undamaged batteries. If the external insulation of the rechargeable battery is damaged or if the rechargeable battery is deformed or bloated, it must not be charged. In this case, there is immediate danger of fire and explosion!
- Never damage the exterior of a LiPo flight battery. Never cut the covering foil. Never stab any LiPo flight batteries with pointed objects.
- As the charger and the rechargeable LiPo flight battery both heat up during the charging procedure, it is necessary to ensure sufficient ventilation. Never cover the charger or the LiPo flight battery! Of course, this also applies for all other chargers and rechargeable batteries.
- Remove the LiPo flight battery that is to be charged from the model and place it on a fire-proof support (e.g. a plate). Keep a distance to flammable objects.
- Disconnect the LiPo flight battery from the charger when it is fully charged.
- Chargers may only be operated in dry rooms. The charger and the LiPo flight battery must not become damp or wet.
- Never take the rechargeable battery apart! The rechargeable battery may not be subjected to any mechanical strain!
- The contacts may not be short-circuited, as there is danger of fire and explosion!
- Do not expose rechargeable batteries to fire, as there is a risk of explosion!

- Keep rechargeable LiPo batteries away from children. Store rechargeable batteries in a dry, cool place.
- If a rechargeable battery is deformed or damaged during a crash, it must no longer be used. The same applies for “swollen” rechargeable batteries, or rechargeable batteries with other visible deformation or leaks. Do not attempt to charge such rechargeable batteries! Danger of fire and explosion! Dispose of such rechargeable batteries in an ecologically sound fashion.
- The general hazard notices for handling batteries and rechargeable batteries also apply to rechargeable LiPo batteries.

Total discharge

- Since discharging below 3.0 V per cell would lead to permanent damage of the rechargeable battery pack, this total discharging is to be prevented as far as possible.
- For safety reasons, programmable cruise controls/flight control systems should be set in such a way that the undervoltage detection has already responded before a voltage of 3.0 V per cell is reached (e.g. 3.2 V). Alternatively, optical undervoltage displays are also recommended.

Correct dimensioning

- As the current drawn rises, the battery pack warms and the usable capacity is lowered. The ideal operating temperature during discharge is between +20 and +40 °C and must not exceed +60 °C even under extreme load.
- The maximum short-time discharge current is stated in the technical data sheets or can be read directly from the battery pack. The value “C” always refers to the capacity value of the respective battery pack.

Example:
A battery pack with a capacity of 2100 mAh and ”20 C” can be discharged with 2100 mA x 20 = 42 A maximum.

- However, the maximum permissible continuous current is clearly lower. If there are no precise manufacturer’s specifications, the battery pack should not be discharged with more than approx. 50 % of the maximum permissible surge current over a long term.

12.6 Propellers

Only use Navigator 250 propellers from RC Logger!

The propellers are only designed for use with electric motors.

Do not use the propellers if the peripheral speed of the blade tip is more than 157 m/s. The maximum revolutions per minute (n) depend on the diameter (d) of the propeller and can be calculated as follows:

n = revolutions per minute (RPM)

k = constant = 3000

d = diameter (Ø) of the propeller in m

n = k/d = 3000/d

Example:

d = 20 cm = 0.2 m

k = 3000

n = 3000 / 0.2 = 15000 RPM

In order to prevent a loss of strength, the moisture contained in the material must be preserved, therefore store the propeller in a cool and damp environment.

Proceed with caution when using rotating propellers:

- Never stand to the side or in front of the propeller’s rotation plane!
- Do not use damaged propellers.

Disclaimer: Although the utmost care has been taken during material selection and production, the manufacturer cannot bear responsibility for liability claims or consequential damages arising from the use of our propellers, as it is not possible to verify whether the propellers were used and handled properly.

12.7 Miscellaneous

- Observe the laws concerning the use of cameras for surveillance purposes.
- Consult an expert when in doubt about operation, safety or connection of the device.
- Maintenance, modifications and repairs are to be performed exclusively by an expert or at a qualified shop.
- If you have questions which remain unanswered by these operating instructions, contact our technical support service or other technical personnel. See '34. Product support' on page 40.

13. Protect your model

13.1 Safety features

The Navigator 250 has a range of built-in safety features, which protect the model from damage and/or should reduce possible damage to a minimum. You can identify some of the protection mechanisms by observing the behaviour of the LEDs.

Please refer to the table '28. Status indication table' on page 36 for an overview of LED statuses and buzzer behaviour.

The following are indicated or monitored:

- Properly bound transmitter
- Signal strength
- Flight mode
- Permanent reception interferences (Emergency landing is initiated after approx. 5 s, motors are turned off automatically)
- Flight battery condition (Connecting a non-fully charged battery to the Navigator 250 can lead to undervoltage detection, thus the motors will not start.)
- Permanent voltage undercut of flight battery (Emergency landing is initiated, motors and LEDs are turned off automatically)
- Motor blockage (All motors are turned off when one or more propellers are blocked).

13.2 Accident prevention

We strongly advise you to refrain from stunts until you master the Navigator 250 in normal flying conditions.

Careless operation can cause serious damage and injury. Observe the following:

- Only fly the Navigator 250 outdoors and during good weather conditions.
- Do not fly the Navigator 250 during adverse weather (rain, snow, strong winds, etc.).
- Do not fly without having covered the electronics (canopy (2)). Ensure no moisture enters the body. Never fly when it rains!
- Keep a clearance area of at least 20 x 20 m.
- Do not fly the Navigator 250 in the vicinity of people and animals.

13.2.1 Learn from experienced pilots

The best learning experience is provided by pilots who have experience in flying this type of aircraft.

We recommend you consult a model craft flight trainer or an experienced model craft helicopter pilot to provide you the necessary guidance to get started with the Navigator 250.

13.3 Emergency stop

In case of an emergency, press the emergency stop button (left button (24)) at the rear to immediately shut down all running operations.

See »Fig. 1

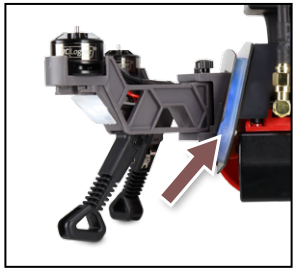

Fig. 1

13.4 Lost locator

The Navigator 250 is equipped with a lost locator function. When triggered the Navigator 250 emits beeps in the S.O.S. pattern.

The function is triggered by a crash or hard landing, but can also be manually triggered by moving both control sticks to the right bottom corner and holding them in this position for approx. 2 seconds.

In order to deactivate the lost locator, move both control sticks to the right top corner and hold them in this position for approx. 2 seconds.

> Note: The beeping is also stopped as soon as the motors are started again.

13.5 LED – Status/Indications

Refer to '28. Status indication table' on page 36 for a complete overview. Study the table carefully and consult it whenever colour indications are important.

13.6 Electrical/electronic components

- Make sure you do not touch the PCB boards with any wires or connectors. Be especially careful when the flight battery is connected.
- Electrostatic discharge can damage electronic components. Discharge yourself before you touch them and do not leave sweat residue.
- Keep the Navigator 250 away from magnetic sources. The Navigator 250 uses magnetic components for navigation purpose and they may be impaired or damaged by external magnetic forces.

Quick Start

14. Getting the Navigator 250 into the air

14.1 Antenna

The antenna must be installed before the power supply is established (battery) or else the video transmitter will become damaged.

1. Screw the supplied clover leaf antenna (8) onto the antenna socket (20) at the rear of the Navigator 250. Refer to »Fig. 2.
2. Use a suitable wrench to tighten it securely.

14.2 Unfolding

For easy storage and protection, the arms (13) and legs (12) are foldable. Refer to »Fig. 2.

1. Losen the top knurled screw of the arm lock (14) on the arm hinge.
2. Swing each arm fully out and secure it by tightening the knurled screw again.
3. Fold each leg out.

- Before storing, loosen the knurled screws, swing the arms in and fold the legs up.

14.3 Charge battery

- Always fully charge the flight battery (23) before you fly.
- Use the supplied balance charger (69018RC) to charge the flight battery. Read the operating instructions supplied with the charger before using it.

1. Remove the cover from the balancer socket (21) on the battery and connect the supplied balancer connection cable to the battery and the “3S” balancer connection on the charger. Now, connect the flight battery to the charger by using the charging cable.
2. Observe the indicator lights on the charger (and their labels) while charging.
3. Replace the balancer socket cover.

Fig. 2

14.4 Install battery

Warning! After connecting the battery, the camera calibrates itself. Do not obstruct it!

Only use the supplied flight battery or a suitable spare battery from RC Logger.

1. Slide the battery into the battery compartment until it locks. Refer to »Fig. 3.
2. The camera (6) calibrates itself and returns to the position set on the transmitter.

- Release the flight battery with the battery release button (18) next to the battery. Refer to »Fig. 3 (white arrow).
- Before you install the battery, turn on the transmitter. An unbound aircraft is considered uncontrolled. Note that Navigator 250 and transmitter cannot be bound before you have calibrated and learned the channels of the Navigator 250.
- Store the battery in a dark, cool and dry place, away from the reach of children. Moisture and direct sunlight can lead to battery damage or even explosion.

✔ It is best to use a specially designed storage container for LiPo batteries available from specialist shops.

14.5 Calibrating and channel learning

- It is necessary to calibrate the Navigator 250 before your first flight. Refer to chapter '16. Calibration' on page 24 and follow the calibration procedures.

✔ For your own safety you are advised to remove the propellers before starting the calibration procedures. Refer to section '14.6 Installing the propellers' on page 18.

Fig. 3

14.6 Installing the propellers

✔ Remove the flight battery before you install propellers and guards!

Refer to »Fig. 4.

- Overtightening will irreversibly damage the thread in the propeller mount. In this case you must immediately replace the motor! Both threads and bolts of each propeller mount/propeller must be in perfect condition.

1. Install a propeller (7) (10) on each motor (see »Fig. 4) by observing the propeller diagram (see »Fig. 5). There is a marking on each propeller. If propellers are installed incorrectly, the Navigator 250 will not fly and may behave erratically.
2. Install a propeller guard on each arm (see »Fig. 4).

Fig. 4

14.7 FPV camera

- The FPV camera (6) is supplied with power as soon as you connect the flight battery.

Warning! After connecting the battery the camera calibrates itself. Do not obstruct it!

- The FPV range is limited to **100 m** in the open field.
- During flight, the camera angle is automatically controlled by the controller based on preset parameters.
- Camera settings can be adjusted in the EYEControl:Navigator app.
- Remove the protective cap from the lens before flying and replace it after use.

14.7.1 Camera control and settings

- By default the camera tilts based on the copter's horizontal position (see »Fig. 6). This auto-tilting function can be turned off in the **EYEControl:Navigator** app.
- If you want to manually control the camera angle from your transmitter, turn the analog knob VRB of channel 8 on the transmitter (see »Fig. 7).

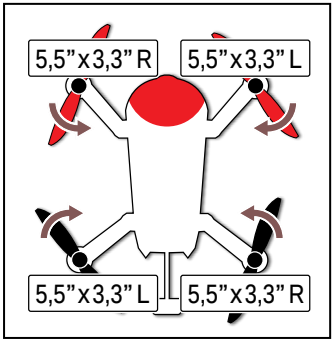

Fig. 5

Fig. 6

Fig. 7

14.8 Video TX

- Real time video transmission is possible via compatible FPV goggles.
- Compatible brands: RC Logger (89141RC), Fat Shark
- Read the instructions supplied with the goggles before you use them.

14.8.1 Default channel

Default channel on the Navigator 250: 5820 MHz

14.8.2 Switch channel

1. Turn the Navigator 250 upside down in order to have access to the video board channel switches.
2. Study the channel switch table »Fig. 8 and adjust the channel to match your FPV goggles.

14.8.3 Connecting FPV goggles

1. Install the flight battery.
2. Turn the goggles on and adjust the channel on your FPV goggles to match the set channel.
3. Check video transmission.

	A	B	F
CH1			5740M ON 12345
CH2	5845M ON 12345	5752M ON 12345	5760M ON 12345
CH3	5825M ON 12345	5771M ON 12345	5780M ON 12345
CH4	5805M ON 12345	5790M ON 12345	5800M ON 12345
CH5	5785M ON 12345	5809M ON 12345	5820M ON 12345
CH6	5765M ON 12345	5828M ON 12345	5840M ON 12345
CH7	5745M ON 12345	5847M ON 12345	5860M ON 12345

Fig. 8

14.9 Controls

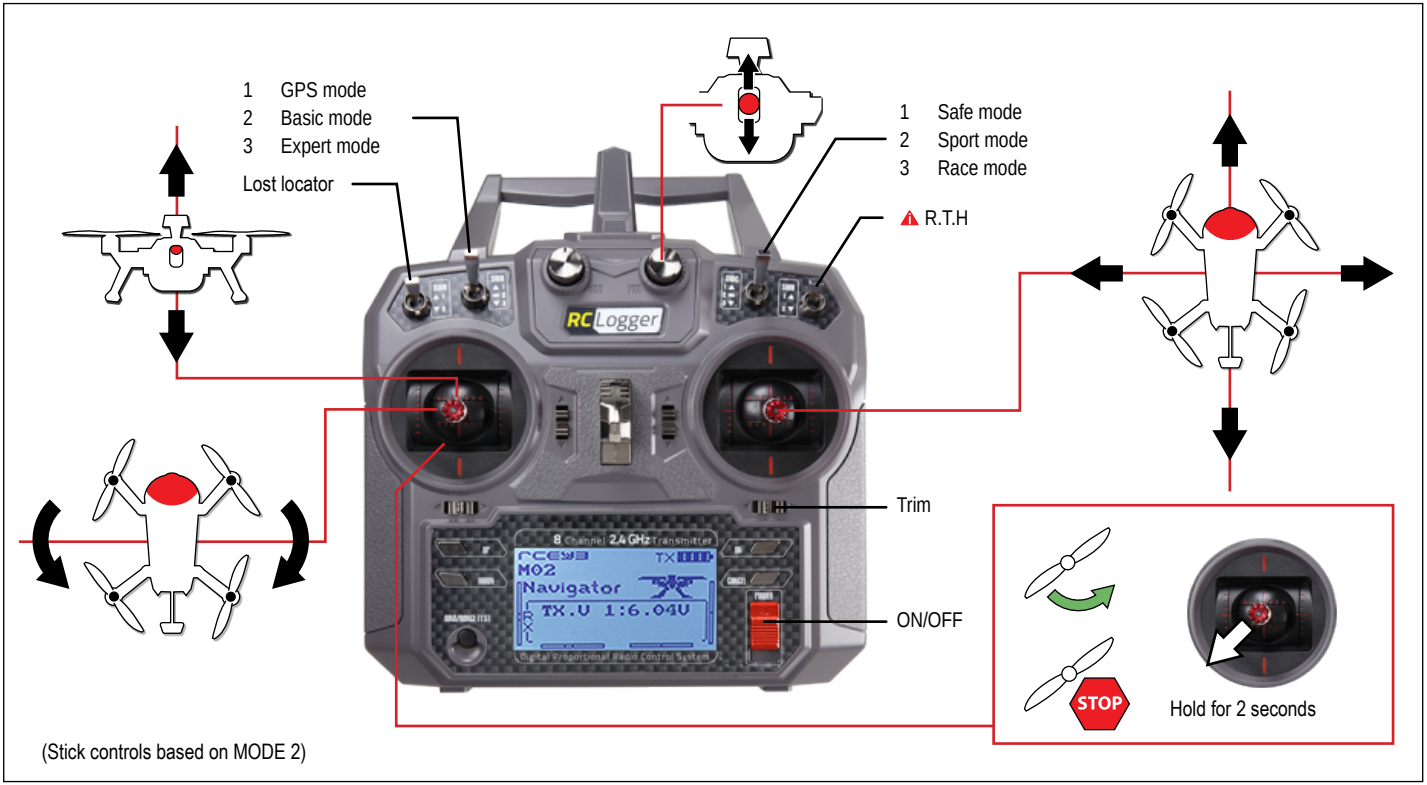

Refer to '18. Selecting a flight mode' on page 28 and '19. Selecting agility' on page 29

14.10 Fly it

The Navigator 250 is now ready for its first flight. You are strongly advised to read through chapter '17. Flying the Navigator 250' on page 27 before the first take-off.

14.11 Status indications

Flight modes

GPS (Blue) | Basic (Magenta) | Expert (Orange)

Flight battery low

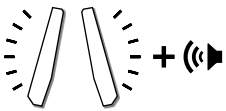

(White) Level 1: 1 Hz, Level 2: 5 Hz

Errors

(Red)

R.T.H. activated

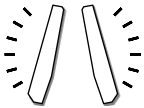

(White) 0.5 Hz

GPS signal quality (Rear LED)

Optimal | Good | Weak | No signal

Idle alarm

If the copter is left idle in operation state for a minimum of 10 min. it will emit warning signals. Remove and install the flight battery again.

14.12 ArF version

If you purchased an ArF version you need a RC Logger R8 Radio Transmitter (89102RC).

- Should you not have one already, you can purchase it from www.rclogger.com.

Note that the receiver included with the R8 Radio Transmitter set 89102RC is not compatible with the Navigator 250. The Navigator 250 has a built-in receiver and an ArF user only needs to pair the R8 Radio Transmitter with the Navigator 250.

15. EYEControl:Navigator app

- The **EYEControl: Navigator** app is available in the Google Playstore for Android mobile devices and in the Apple App Store for iOS devices under the name **'EYEControl: Navigator'**.
- Make sure the app is compatible with your device before you attempt to install it.
- The app includes instructions and tutorials as well as step-by-step calibration guidance.

Google play | Download on the App Store

15.1 Pairing with Navigator 250

1. Turn on Bluetooth® on your mobile device and start the EYEControl:Navigator app
   - When using an Android device, additionally turn on 'Location' service.
2. Insert and connect the flight battery.
3. Press and hold the pairing button (left button) (24) until 'Navigator' is shown on the PAIRING page in the app (around 5 to 10 sec).
4. Once the Bluetooth® connection has been established, the app switches to the landing page and displays 'Connected' and firmware version.
5. Pairing is completed.

Detailed Instructions

16. Calibration

If you fly the Navigator 250 for the first time it is necessary to calibrate it prior to the first take-off.

Remove the propellers before you proceed!
Only after you have successfully completed the calibration, mount the propellers again.

The Navigator 250 is calibrated in a 3-step procedure:

16.1 Preparation

✔ Make sure the flight battery is fully charged.

1. Remove the propellers.
2. **Transmitter:** Set travel of all channels to '+ –100 %' and trims to '0'.
3. **Transmitter:** Make sure that the throttle stick is in its mid-position (the sticks are spring loaded and are centered by default).
4. **Transmitter:** Set all switches and knobs to their default positions (switches: position 1, knobs: turn fully anti-clockwise).
5. Install the flight battery and turn the transmitter on.

16.2 How the calibration button works

The calibration button is integrated into the right rear LED (right button (25)). Press and hold the button to enter calibration mode. Press 2 times quickly to start calibration. Press 1 time to skip/go to next calibration step. Refer to »Fig. 9.

✔ When you calibrate the Navigator 250 for the first time you must not skip any steps.

However, at a later point in time this feature may become useful when you want to calibrate only one item (e.g. compass) but not the others.

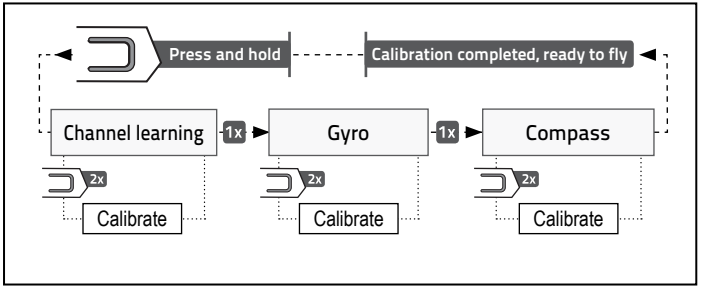

Fig. 9

16.3 Entering calibration mode

There are two ways you can enter the calibration mode:

- **Calibration button (right button):** Press and hold it for at least 2 seconds. The rear LEDs turn solid red (channel learning).
- **Transmitter switch 'SWB':** Flip the switch 5x from 1 to 3 and back to 1. Channel Learning is entered automatically.

16.4 Calibration indicators

The rear LEDs indicate each calibration step.

Channel learning (Red)	Gyro (Green)	Compass (Magenta)

16.5 Step 1: Channel learning

- 1x beep confirms a successfully learned channel.
- 2x beeps indicate the completion of the channel learning procedure.
- **Arm LEDs (4), (11):** the blink code (e.g. 1 blink) indicates which channel is to be learned next.
- **Auxiliary switch:** Slowly move the switch through all positions and back to its starting position.

Proceed as follows:

1. Enter the calibration mode.
2. Press the calibration button 2x quickly to enter channel learning (if you use the transmitter switch 'SWB', this step is not necessary).
3. Learn channels according to the following calibration and modes tables.
   - It is possible to complete the learning procedure after having learned channel 7 by waiting for at least 8 seconds.
4. Tap the calibration button once (1x) to proceed to Gyro Calibration.

LED blinks	Control
1x	Throttle – Move to min. and back (mid-position)
2x	Rudder – Move to left and back
3x	Elevator – Move to top and back
4x	Aileron – Move to the left and back
5x	Flight mode selection switch (3 positions): SWB 1 ▲ 2 ▬ 3 ▼ — Pos 1: GPS — Pos 2: Basic — Pos 3: Expert (no autoleveling)
6x	Bank selection switch (3 positions): SWC 1 ▲ 2 ▬ 3 ▼ — Pos 1: Safe bank — Pos 2: Sport bank — Pos 3: Race bank
7x	Lost locator switch (2 positions): SWA 1 ▲ 2 ▼ — Pos 1: Lost locator OFF — Pos 2: Lost locator ON
8x	VRB Camera tilt

Modes	
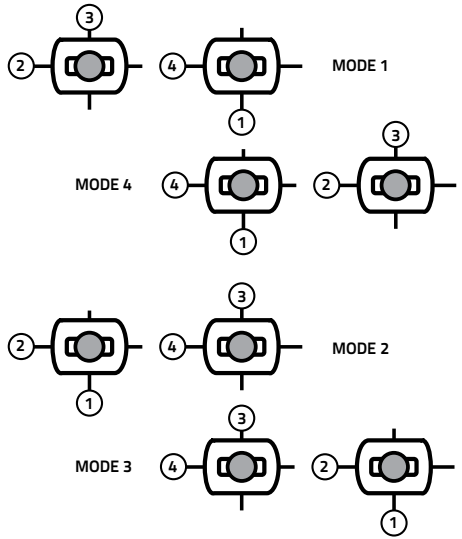	1 Throttle 2 Rudder 3 Elevator 4 Aileron

16.6 Step 2: Gyro calibration

✔ You need to perform this step with precision or the Navigator 250 will not fly properly.

1. Tap the calibration button (right button) two times (2x) quickly to enter Gyro Calibration.
2. Place the Navigator 250 on a horizontal and level surface and wait for a single beep.
3. Rotate the Navigator 250 by 180° about its vertical axis. Refer to »Fig. 10, steps A and B.
4. 2 beeps confirm the successful completion of the gyro calibration procedure.
5. Tap the calibration button once (1x) to proceed to Compass calibration.

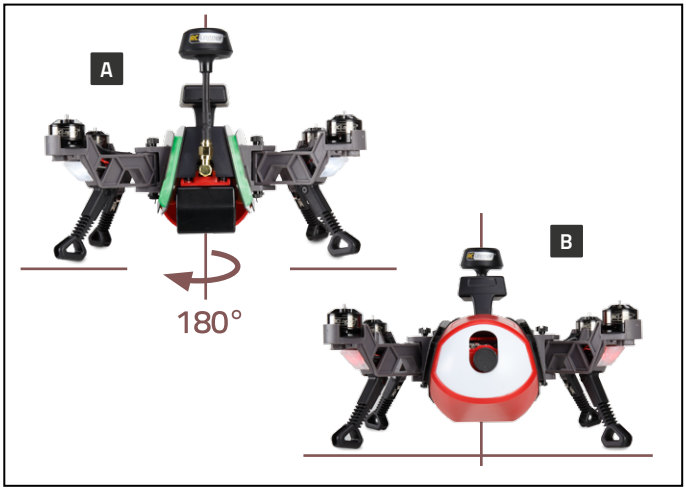

Fig. 10

16.7 Step 3: Compass calibration

✔ You need to perform this step with precision or the Navigator 250 will not fly properly.

- Perform the compass calibration in an open area, away from metal objects, high-voltage powerlines, radio towers/masts and any portable or stationary devices sending and receiving radio signals in order to eliminate magnetic interference.
- **Calibration failed:** Calibration can fail in each step (3 beeps). In case of failure, move away from magnetic interferences and restart the procedure.

1. Tap the calibration button two times (2x) quickly to enter calibration.
2. Rotate the Navigator 250 in sequence as shown in »Fig. 11, A to D. Wait for confirmation:
   - Successful (2 beeps), Failed (3 beeps)
3. Tap the calibration button once (1x) to conclude and exit the calibration mode.

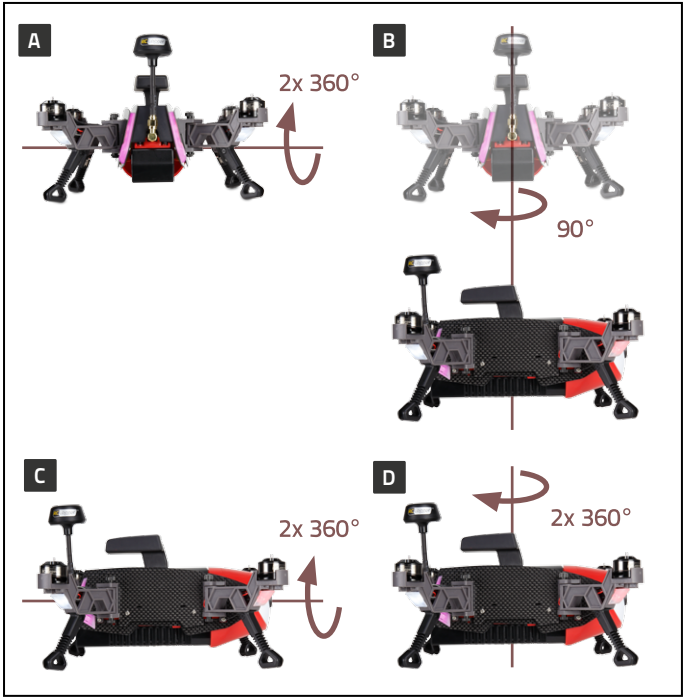

Fig. 11

16.8 If compass calibration fails

✔ Compass calibration should be done at open outdoor area. The calibration process may fail due to magnetic interference from surrounding environment.

Failing of compass calibration is indicated by 3 prominent beep sounds (3 beeps). In case of failure:

1. Move away from magnetic interferences.
2. Disconnect the flight battery and re-connect it.
3. Restart the procedure.

- Successfully completed calibration procedures can be skipped.

17. Flying the Navigator 250

- Before you install the battery, turn on the transmitter. An unbound aircraft is considered uncontrolled.

17.1 Visual inspection

- Inspect the Navigator 250 for damage before every flight. Replace damaged components before flying again. Only use original spare parts.
- Ensure the motor arms are fully unfolded in flying position and the locking screw/nuts are completely tightened.
- Ensure the propellers can freely rotate without hitting any parts of the Navigator 250 body.
- Observe the condition of each motor:
  - Motor shaft
  - Motors can freely rotate
  - Propeller position and condition
- Always replace defective parts immediately.
- If you are unsure about your product's condition consult an experienced RC pilot or contact our customer support. Do not attempt any further flight until the Navigator 250 is fit for flight.

17.2 Placement at start position

Place the Navigator 250 on a level surface (e.g. stone floor). Take note of chapter '13. Protect your model' on page 14.

17.3 Stick controls

Refer to chapter '26. Terms' on page 34 and also study '14.9 Controls' on page 21.

17.4 Flying

✔ Start with simple flight manoeuvers and gradually proceed to more challenging ones.

1. Place the Navigator 250 on even ground, wait and observe the GPS signal reception level.

When taking off without GPS signal, the Navigator 250 will land at the location where R.T.H. is triggered.

2. Turn on the motors.
3. Check proper functioning of **aileron**, **elevator**, **throttle** and **rudder**.
4. Increase throttle until the Navigator 250 is at least 50 cm above the ground.
   - At this height, you have passed the so-called ground effect and the Navigator 250 is more stable in its flight position, thus can be controlled more easily.
   - Be careful when applying **rudder**, which will rotate the Navigator 250 around its vertical centre axis, causing you to become disoriented. Study carefully how **aileron** and **elevator** behave after applying rudder.
5. You have now managed the critical part and can familiarize yourself with the Navigator 250 by gentle throttle motions.
6. To land, decrease the throttle slightly until it gravitates to the ground.
   - A somewhat solid touchdown is no problem and should not be corrected with jerky throttle movements.
   - Attempt to touch down vertically ("helicopter landing"). Avoid landing with high horizontal speeds ("airplane landing") to prevent the legs from getting entangled, resulting in the Navigator 250 tumbling.
7. After landing, turn off the motors.
8. Disconnect the battery.

17.4.1 Trimming

- Trimming allows you to equalize drifting. Drifting refers to movement out of position when in hover flight without aileron or elevator input.
- Refer to the transmitter's operating instructions for more information.

18. Selecting a flight mode

18.1 GPS mode

In the GPS mode the Navigator 250 holds a set position (x, y, and z-axis). The GPS function controls and makes adjustments to all three axes.

1. Activate the Basic mode.
2. Lift the Navigator 250 up to the desired altitude and position it. Move the throttle towards its centre position.
3. Activate the GPS mode on your transmitter.
4. The Navigator 250 now holds horizontal position and altitude.
5. Correct the position as desired.
6. Change flight modes to deactivate the GPS mode.

The GPS signal strength is indicated by the rear LEDs. Depending on the GPS signal strength the solid LED is interrupted by distinct blink patterns, which are summarized in »Fig. 12. The lower the blinking frequency, the better the GPS signal.

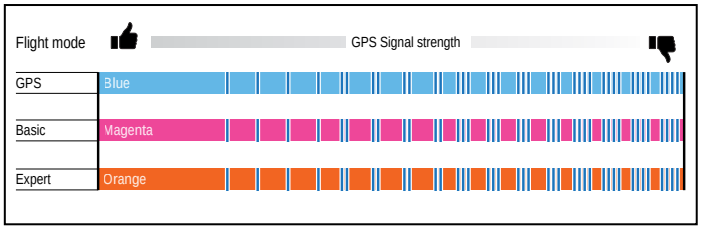

Fig. 12

18.2 Basic mode

- The basic mode is designed specifically for users who are new to flying multirotor systems and those who look for intuitive controls for aerial photography.
- The controls respond less aggressively. This behaviour is intentional, allowing pilots to get a first feeling of how the Navigator 250 responds to lever input.
- Auto-Levelling is enabled. It means that if the pilot lets go of the aileron and elevator control stick, the Navigator 250 regains a relative horizontal level position. Small drifts in any direction are normal, especially during not fully calm conditions.
- We recommend this mode when you intend to use a camera or FPV equipment. Motor power is restricted for smoother operation and less aggressive behaviour, which is beneficial to scenery capture.

18.3 Expert mode

The Expert mode unleashes the full potential of the Navigator 250. Banking angles and power output are significantly increased, the acceleration sensor is deactivated, allowing fully pilot controlled flipping and rolling.

This mode is designed for pilots who have fully gained experience and confidence with flying the Navigator 250. It allows fast passes, loops, rolls, flips at the pilot's own ability since control functions such as auto-levelling are completely disabled.

18.3.1 Summary

- Expert mode is not designed for confined indoor flying.
- Expert mode is ideal for pilot controlled acrobatic fun and aggressive FPV flying.
- GPS Position Hold is disabled.
- Altitude Height Hold function (Mid-stick mode throttle control) is disabled.
- Auto-levelling is disabled.

18.3.2 Stick control

Throttle: Direct control of motor RPM. The lowest stick position gives the lowest RPM. (Same as normal mode) It is recommended that the pilot removes the throttle spring from the R8 transmitter when flying in this mode as control response will be greatly improved. The removal of the throttle spring is described in the operating instructions included with the transmitter.

Rudder: Control clockwise/counter-clockwise heading rotation (Same as GPS / Normal Mode).

Elevator: Control the change of pitch angle. Higher elevator input results in higher speed of pitch rotation. Pitch angle stays unchanged when elevator stick is at middle, despite of the current pitch angle (even if Navigator 250 is upside down).

Aileron: Control the change of roll angle. Higher aileron input results in higher speed of roll rotation. Roll angle stays unchanged when aileron stick is at middle, despite of the current roll angle (even if Navigator 250 is upside down).

18.3.3 High and Low rates

The expert mode has a high and low rate bank. This bank can be triggered via the SWC switch (Bank selection switch) on the R8 transmitter (Pos 1: Low rate, Pos 2: High rate). Pilots can expect that the center of the aileron and elevator controls will feel similar in each bank, however the flipping capability will be significantly increased once the stick is moved to its out-most limit in high rate.

19. Selecting agility

For all three flight modes – Basic, GPS, and Expert – you can select two preset agility levels, and even mix your own according to your preferences. Study the following table:

Agility	Switch position	Description
Safe bank	Pos. 1	Low agility. Preset for smooth aerial application.
Sport bank	Pos. 2	Strong agility. Fast sport and fun flights.
Race bank	Pos. 3	Custom agility levels; Set in EYEControl:Navigator app; Replaces either Safe bank or Sport bank.

20. R.T.H.

In order for R.T.H. to work, wait (1 – 10 min.) until the Navigator 250 receives a good GPS signal before taking off.

R.T.H. (Return To Home) is a failsafe feature of S.M.A.R.T. (Software Managed Auto Return Technology) enabling the Navigator 250 to fly back to the take-off position and is triggered automatically or manually. If triggered manually, the pilot can deactivate it again to take back control as soon as they see the situation under control.

20.1 Auto triggers

- Receiver loses signal (receiver failed)
- Operating outside the operating range (see technical data)
- Turning the transmitter off

20.2 Manual trigger

- Deactivated: R.T.H switch (switch 'SWD') in position 1
- Activated: R.T.H switch (switch 'SWD') in position 2

20.3 Procedure

When triggered, returning to home follows a simple two-step procedure: the Navigator 250 is automatically brought into a stable hover position, then returns home. Study »Fig. 13.

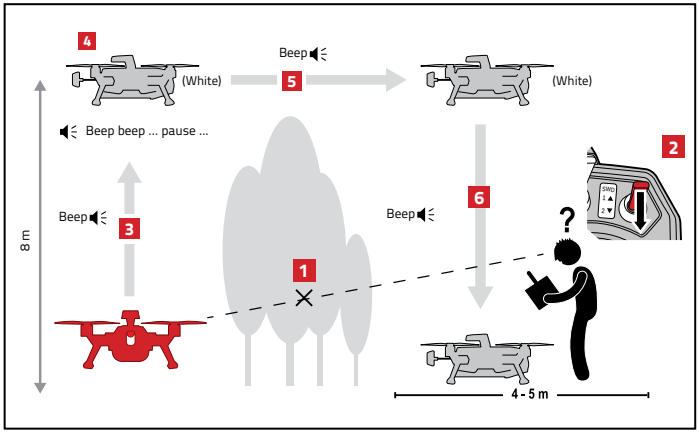

Fig. 13

20.4 Fixing the 'Home' location

The home location is locked at first take off when the battery is inserted. A **long beep** upon take off indicates home location lock. If the home location cannot be locked due to no/weak GPS reception, the Navigator 250 continuously sounds double beeps during flight.

If you started the motors in another than your preferred 'Home' location, turn the motors off and unplug and reconnect the flight battery, then register a new home location by turning the motors on again.

In the app you can enable a warning signal (disabled by default) in case there is no 'Home' location locked at take-off. With the signal enabled, if you take off without locked 'Home' location, the Navigator 250 continuously emits double beeps.

20.5 The importance of the GPS signal

For R.T.H. to work, a good GPS signal is required at all times.

- It may take up to 10 min. for GPS signal acquisition the first time you turn it on.
- For subsequent signal acquisition the time may be shorter (1 to 2 min.).

Note that whenever you move the Navigator 250 to another location, the signal acquisition time may increase again (1 to 10 min.). Depending on the GPS signal strength, the Navigator 250 behaves differently.

The below table summarizes all possible behaviours.

GPS signal	Switch position
Good signal at take-off and when R.T.H. is triggered	Navigator 250 returns home.
Weak signal at take-off, but improved signal during flight	Navigator 250 holds its position for 5 seconds, then descends and lands.
Signal weakens during flight	Navigator 250 descends immediately.

21. Geofence and distance fence

- Study »Fig. 14.
- You set up a virtual fence (distance and max. altitude) in which the Navigator 250 flies.
- Geofence and Distance fence settings are available in the EYEControl:Navigator app and must first be enabled in the app.
- Geofence and Distance fence only work in GPS flight mode with ‘Safe bank’ enabled. Other modes and banking settings deactivate the functions.

1. Activate the GPS flight mode and set banking to ‘Safe bank’.
2. Set the distance radius and the max. altitude in the EYEControl:Navigator app and activate the function.
3. Determine a take-off point.
4. When you fly the Nagivator 250, it stays within the set boundaries.

- Switching to a flight mode other than GPS while Geofence is activated allows you to leave the set boundaries. Activate **GPS mode (and ‘Safe bank’)** again and fly back into the Geofence zone in order to use Geofence again (note that you only can fly closer to the Geofence zone but no longer further away from it).
- Switching to Basic flight mode deactivates max. height and allows you to fly higher than the pre-set max. altitude. When switching back to **GPS mode (and ‘Safe bank’)** the Navigator 250 automatically descends to the set max. altitude and re-activates max. height.

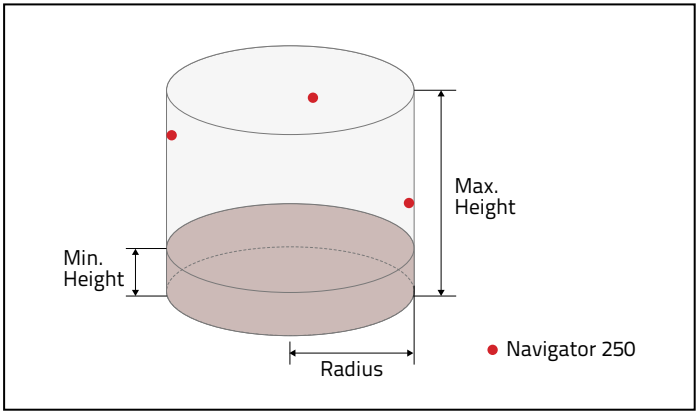

Fig. 14

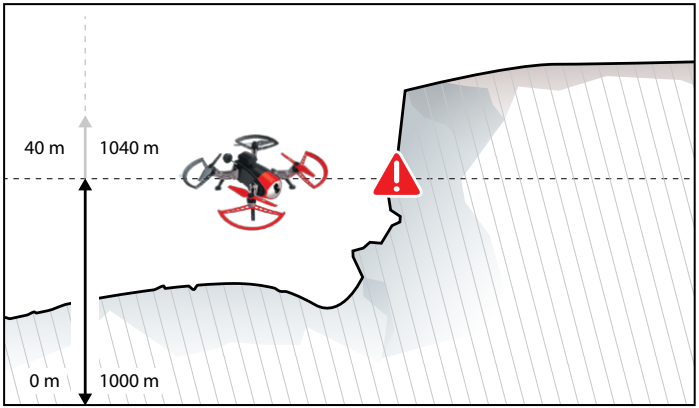

Fig. 15

22. Low Altitude Control – Min. height

- Low Altitude Control settings are available in the EYEControl:Navigator app.
- Low Altitude Control only restricts the minimum altitude.
- Accuracy: ±2 m, min. height: 5 m

> **Important!** In order to fly lower than the set min. height you must keep the throttle stick at its miniumum position for min. 5 seconds.

- Low Altitude Control can only be activated in **GPS flight mode (and 'Safe bank')**.
- Switching to another flight mode deactivates Low Altitude Control.

22.1 Avoid crashes

- Study »Fig. 15.

The Low Altitude Control is controlled by atmospheric pressure. When you connect the battery in a certain place the atmospheric pressure is measured and taken as 'zero' value, from which the min. height is calculated.

Example:

- Min. height set in app: **40 m**
- Height above sea level: **1000 m**

Once the Navigator 250 surpasses 40 m (actual 1040 m), Low Altitude Control is triggered and the Navigator 250 will not descend lower than the 40 m mark (± 2 m).

The pilot must be aware that the Navigator 250 does not consider obstacles that are within the set height and can therefore easily crash into objects in its path (see »Fig. 15).

23. Maintenance, care and repair

> We provide video instructions for many spare parts. View them on www.rclogger.com. If instructions are available, follow them with precision.

23.1 Regular cleaning and maintenance

23.1.1 Cleaning

The Navigator 250 is a simple but well-designed flying device. There are no mechanical parts that need to be lubricated or require special maintenance. However, after each flight you should clean the Navigator 250 of possible dirt (wool strings, dust, etc.).

For cleaning, use a dry or slightly damp cloth and avoid contact between water and the electronics, rechargeable battery and motors.

23.1.2 Maintenance and repairs

Defective components present a hazard. Replace all damaged components before flying the Navigator 250 again. It is important that you only use original spare parts. Non-original spare parts can lead to damage and accidents, or may not be of sufficient quality.

23.2 Drift

- Cold temperature environmental conditions may require sensitive electronic components to reach ideal operating temperature slower as compared to under favourable conditions such as room temperature.
- Under such cold conditions your unit may tend to drift in any direction, increasing gradually. Small drifts in any direction are normal, however. Drift may also be caused by propeller wash while flying close to ground surface. Operate the Navigator 250 within the temperature range given in the technical data.

If you need to continuously trim the Navigator 250 to ensure proper flying then this may be due to one of the following reasons:

- A motor shaft might be slightly bent or a propeller is defective resulting in vibrations. Either replacing the complete motor arm or installing a complete new set of propellers may solve this issue.
- Crashing the Navigator 250, or exposing it to mechanical stress during transportation typically causes these phenomena.
- The onboard sensor has lost its factory calibration. Typically, this is caused by a hard hit (crashes), or exposure to high temperature. It can also be related to transport issues.

23.3 After a crash

It is strongly suggested to always inspect for damage. Replace defective parts immediately. Defective parts can impact properly working parts!

Immediately disconnect the flight battery after a crash!

- An easy way to maintain the Navigator 250 perfect condition is through visual inspection after every crash.
- During a crash, a motor and arm may be broken. Even if the Navigator 250 is not noticeably damaged at first sight, there may be minor cracks. Such cracks can put the propeller out of alignment with the rest and make the Navigator 250 unstable. Besides, cracks can lead to other problems. Always check the Navigator 250 carefully for cracks.
- Ensure all screws are securely tightened. Replace parts with worn out or stripped screw holes immediately.
- If a propeller is damaged in a crash or other action, replace it immediately.
- This also applies if there are fine tears or grazing in the propeller. Due to the high speed, parts could become loose if the propellers are damaged and result in product or property damage or personal injury.
- Replace damaged propellers according to chapter '14.6 Installing the propellers' on page 18.

24. Firmware update

24.1 Preparation

Software

1. Open www.rclogger.com and navigate to the Navigator 250 product page.
2. Download the following items from the 'Downloads' tab:
   - EYE Loader vx.y software
   - RC EYE Navigator 250 Firmware vx.y firmware
3. Install the EYE Loader software on a Windows® computer running Windows® XP or higher.
4. Start the EYE Loader programme. The interface shows 'NOT CONNECTED'.

Preparing the Navigator 250

1. Remove the flight battery.
2. Remove the two screws holding the right panel in place.
3. Slide the panel up and remove it.
4. Connect a regular micro USB data cable to your computer.
5. Press and hold the calibration button on the right rear LED.
6. Locate the micro USB socket on the Navigator 250 and connect the USB data cable to the micro USB socket. See »Fig. 16.

Fig. 16

7. Select the Navigator 250 firmware file through the "BROWSE" function in the software, then click on "FIRMWARE UPLOAD" to start the firmware update. When the update is complete, the interface shows "SUCCESS".
8. Eject the Navigator 250 via the USB interface on your computer.
9. Disconnect the USB cable from the Navigator 250.
10. Install the carbon fibre panel again.

25. Trouble shooting

25.1 Re-binding transmitter and receiver

> 88016RC RtF: Refer to the operating instructions of the transmitter and receiver (89102RC) for more information on the binding and learning procedure.

- Please carry out the configuration of the Navigator 250 as described in this chapter. Channel learning is essential as otherwise the Navigator 250 will not recognize your transmitting equipment.

25.1.1 Preparing the transmitter (Tx)

1. Ensure that all mixing is deactivated, throttle curves are linear, trims are centered and all travel is set to maximum range.
2. Make sure that the throttle stick is in its mid-position; the sticks are spring loaded and are centered by default.
3. Set all switches to their default positions (position 1).

25.1.2 Binding

1. Disconnect the flight battery.
2. Turn the transmitter off.
3. Press and hold the **BIND/RANGE TEST** button on the transmitter and turn the transmitter on. The transmitter display shows 'RXBinding...'.
4. Press and hold the pairing button (24) integrated into the left rear LED while inserting the flight battery.
5. Receiver and transmitter are re-bound.
6. Disconnect and re-connect flight battery.
7. Re-learn all channels.

- Refer to the full transmitter operating instructions for more information.

25.2 Telemetry data missing

If telemetry data is not shown on the R8 transmitter (89102RC), perform the following steps:

- Ensure that you have updated the R8 transmitter to the latest firmware version. You can do so by following the instructions given in the R8 transmitter (89102RC) instruction manual.
- If the problem persists, please get in touch with our customer service for help.

26. Terms

Throttle	More throttle increases propeller speed and altitude and less throttle reduces propeller speed and altitude.
Elevator	Elevator can be compared to the nodding of a head. Through this, the Navigator 250 gains flight speed forwards or backwards or decelerates.
Rudder	Rudder denotes the rotation of the Navigator 250 around the rudder axis (vertical axis). It occurs unintentionally due to the speed torque of the propellers or intentionally as a flight direction change.
Aileron	Aileron can be compared to the sideways rolling of a ball. In this way, through lifting one side the Navigator 250 moves to the side independently of its forward direction.
Hover	Hover denotes a flight status in which the Navigator 250 neither rises nor falls so that the upwards directed uplift force is equal to the downwards directed weight.
Mode 1, Mode 2, Mode 3, Mode 4	Mode 1, Mode 2, Mode 3 and Mode 4 refer to the stick arrangement of the transmitter.

GNSS	GNSS stands for Global Navigation Satellite System and enables you to precisely fix a position. R.T.H. (Return To Home), the GPS mode and T.P.C.S. (Task Point Command System) make use of GNSS.
I.R.P.C	(Available in future firmware releases) I.R.P.C stands for Intelligent Relative Positioning Control. It utilizes compass and positioning data to control the Navigator 250 relatively to the take-off position.
S.M.A.R.T	S.M.A.R.T or Software Managed Auto Return Technology enables the pilot to quickly and safely recover the Navigator 250 in the event of loss of control over the Navigator 250.
T.P.C.S	(Available in future firmware releases) T.P.C.S or Task Point Command System differs from commonly known way-points, enabling the pilot to programm a full set of tasks (e.g. a full 360° rotation) to be completed at each defined task point. T.P.C.S is activated in and controlled through the app. (See below figure)

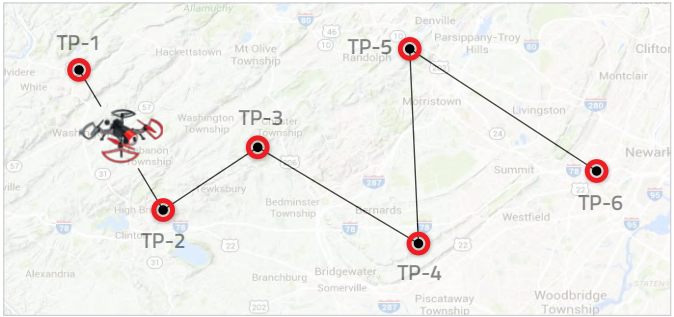

27. Technical data

Power supply ..... 11.1 V LiPo 3-cell rechargeable battery, 2400 mAh

Operating temperature ..... +50 to 104 °F (+10 to +40 °C)

Operating humidity ..... max. 75 % RH, non-condensing

Operating environment ..... outdoors only (dry weather conditions)

Wind conditions ..... no wind, light to mild wind

Altitude ..... 2624 – 3280 ft (800 – 1000 m);
R8 Radio System 89102RC (Range may vary with environmental conditions)

Transmitter range ..... 2624 – 3280 ft (800 – 1000 m);
R8 Radio System 89102RC (Range may vary with environmental conditions)

Propeller diameter ..... 5.5 inches (139.7 mm)

Flight time ..... 18 – 25 mins

Firmware ..... FW V1.0 (no T.P.C.S. and I.R.P.C)

FPV ..... Camera and video transmitter installed with 1 axis stabilization servo

Bluetooth® ..... 4.0 (BLE), Range: max. 10 m

Operating empty weight ..... approx. 755 g (~26.6 oz)

Take-off weight ..... approx. 755 g (~26.6 oz)

28. Status indication table

Type	Status	Trigger	Rear LED
Flight Mode	Basic (ACC assisted)	Channel 5 : (+100)	● Magenta
	Expert	Channel 5 : (0)	● Orange
	GPS (position hold)	GPS fixed - No signal (without Homelock)	Refer to chapter "GPS"
		GPS fixed - Poor signal (with Homelock)	Refer to chapter "GPS"
		Channel 5 : (-100), strong GPS signal (with Homelock)	Refer to chapter "GPS"
	Flight agility (Bank selection switch)	Channel 6	No indication
	R.T.H. Return-to-Home	Channel 5 triggered via switch or Transmitter (Tx) off	○ White – Blinks continuously (0.5 Hz)
	Lost locator	SWA (Channel 7) or Hard impact (crash or hard landing)	According to flight mode
Flight Error	Low battery level 1	Battery <11.4 V	○ White – Blinks continuously (1 Hz)
	Low battery level 2	Battery <10.5 V **(pilot must land !)**	○ White – Blinks continuously (5 Hz)
	Fail safe (PPM failed)	Loss of RF signal	○ White – Blinks continuously (0.5 Hz)
Flight Check Error	GPS / compass failed	Start up main board self test	● Red – Blinks continuously (1 Hz)
	Pressure sensor failed		
	Gyro failed		
	Power system failed (ESC/motor)		
	Permanent system check	System error (pilot must land!)	● Red – Blinks (fast)
Calibration	Tx	Calibration button	● Red
	Gyro	Calibration button	● Green
	Compass	Calibration button	● Magenta
Pairing	BLE Pairing	Pairing button	According to flight mode
Factory state	Gyro or compass calibration procedure	Invalid gyro or compass calibration	● Cyan – Blinks 1Hz (alternating to rear)

Front Arm LEDs	Rear Arm LEDs	Buzzer
Dimming – On/Off		None
Dimming – On/Off		None
Dimming – On/Off	Dimming – On/Off	Double beep, 2s pause (can be disabled via APP)
Dimming – On/Off	Dimming – On/Off	Single long beep at take-off
Dimming – On/Off		None
Dimming – On/Off		None
Same as buzzer	Same as buzzer	Double beep, 1.5 sec pause. Long beep at every step of the process.
S.O.S	S.O.S	S.O.S
Single flash, 1s pause	Single flash, 1s pause	Single beep, 2s pause
Flashing 2 Hz	Flashing 2 Hz	Continuous double beeps (1 Hz)
Dimming – On/Off		Long beep at each stage of process
Dimming – On/Off		None
Flashing 5 Hz	Flashing 5 Hz	Continuous single beeps (5 Hz)
Flashing – According to steps	Flashing – According to steps	None
Flashing – According to steps	Flashing – According to steps	None
Flashing – According to steps	Flashing – According to steps	None
Double flash 1 Hz	Solid ON	None
Dimming – On/Off		None

29. Spare parts

BN	Product Name
89136RC	Navigator Propeller Guards set
89137RC	Navigator Motor with LED Landing Arms
89138RC	Navigator 5.8 GHz TX
89139RC	Navigator GPS Module
89140RC	Navigator Battery Pack

30. Compatible accessories

BN	Product Name
89110RC	RC Logger Neck Strap
89114RC	Battery Indicator Caps (For XT60)
89141RC	RC Logger FPV Goggles
89147RC	Navigator 5.8 GHz Clover Leaf Antenna (TX)

31. Disposal

31.1 General

In order to preserve, protect and improve the quality of environment, protect human health and utilise natural resources prudently and rationally, the user should return unserviceable product to relevant facilities in accordance with statutory regulations. The crossed-out wheeled bin indicates the product needs to be disposed separately and not as municipal waste.

31.2 Batteries

The user is legally obliged **(battery regulation)** to return used batteries and rechargeable batteries. **Disposing used batteries in the household waste is prohibited!** Batteries/ rechargeable batteries containing hazardous substances are marked with the crossed-out wheeled bin. The symbol indicates that the product is forbidden to be disposed via the domestic refuse. The chemical symbols for the respective hazardous substances are Cd = Cadmium, **Hg** = Mercury, **Pb** = Lead.

You can return used batteries/ rechargeable batteries free of charge to any collecting point of your local authority, our stores or where batteries/ rechargeable batteries are sold.

Consequently you comply with your legal obligations and contribute to environmental protection!

32. Declaration of Conformity

Manufacturer: CEI Conrad Electronic International (HK) Limited

License holder: CEI Conrad Electronic International (HK) Limited

Address: 18th Floor, Tower 2,
Nina Tower, No. 8 Yeung Uk Road,
Tsuen Wan, New Territories, Hong Kong

We declare on our own responsibility, that the product:

Product description: RC EYE Navigator 250

Model: 88016RC

is in conformity with following directives and standards or regulations:

EN 300440-1/-2

EN 301489-1/-3

EN 62479

EN 60950: 2013

CE marking on product:

CE

Christian Listl

CEI Conrad Electronic International (HK) Limited
18th Floor, Tower 2, Nina Tower, No. 8 Yeung Uk Road,
Tsuen Wan, New Territories, Hong Kong

Hongkong, **01 June 2016**

Place and date of issue

Manufacturer/Authorized representative name and signature

33. FCC Note

FCC ID: 2AARVRCE-NAVIGATOR

Caution:

This device complies with Part 15 of the FCC rules and Industry Canada license-exempt RSS standard(s). Operation is subject to the following two conditions: (1) this device may not cause harmful interference, and (2) this device must accept any interference received, including interference that may cause undesired operation.

The manufacturer is not responsible for any radio or TV interference caused by unauthorized modifications or change to this equipment. Such modifications or change could void the user's authority to operate the equipment.

This radio transmitter (identify the device by certification number or model number if Category II) has been approved by Industry Canada to operate with the antenna types listed below with the maximum permissible gain indicated. Antenna types not included in this list, having a gain greater than the maximum gain indicated for that type, are strictly prohibited for use with this device.

This equipment has been tested and found to comply with the limits for a Class B digital device, pursuant to part 15 of the FCC Rules. These limits are designed to provide reasonable protection against harmful interference in a residential installation. This equipment generates, uses and can radiate radio frequency energy and, if not installed and used in accordance with the instructions, may cause harmful interference to radio communications. However, there is no guarantee that interference will not occur in a particular installation. If this equipment does cause harmful interference to radio or television reception, which can be determined by turning the equipment off and on, the user is encouraged to try to correct the interference by one or more of the following measures:

- Reorient or relocate the receiving antenna.
- Increase the separation between the equipment and receiver.
- Connect the equipment into an outlet on a circuit different from that to which the receiver is connected.
- Consult the dealer or an experienced radio/TV technician for help.

The device has been evaluated to meet general RF exposure requirement.

To maintain compliance with FCC's RF exposure guidelines, this equipment should be installed and operated with a minimum distance of 20 cm between the radiator and your body.

34. Product support

Visit http://www.rclogger.com/support or call +852 2559 2662 for product support. Additionally, visit our Online Ticket System at http://support.rclogger.com for any RC Logger inquiry.

35. Legal notes

These operating instructions are published by CEI Conrad Electronic International (HK) Limited, 18th Floor, Tower 2, Nina Tower, No. 8 Yeung Uk Road, Tsuen Wan, New Territories, Hong Kong.

All rights including translation reserved. Reproduction by any method, e.g. photocopy, microfilming, or the capture in electronic data processing systems require the prior written approval by the editor. Reprinting, also in part, is prohibited. The operating instructions reflect the current technical specifications at time of print.

© 2016 by CEI Conrad Electronic International (HK) Limited

88016RC_v4_0716_02_m_en_(2)

P3
RC Logger
www.rclogger.com