RC Logger®

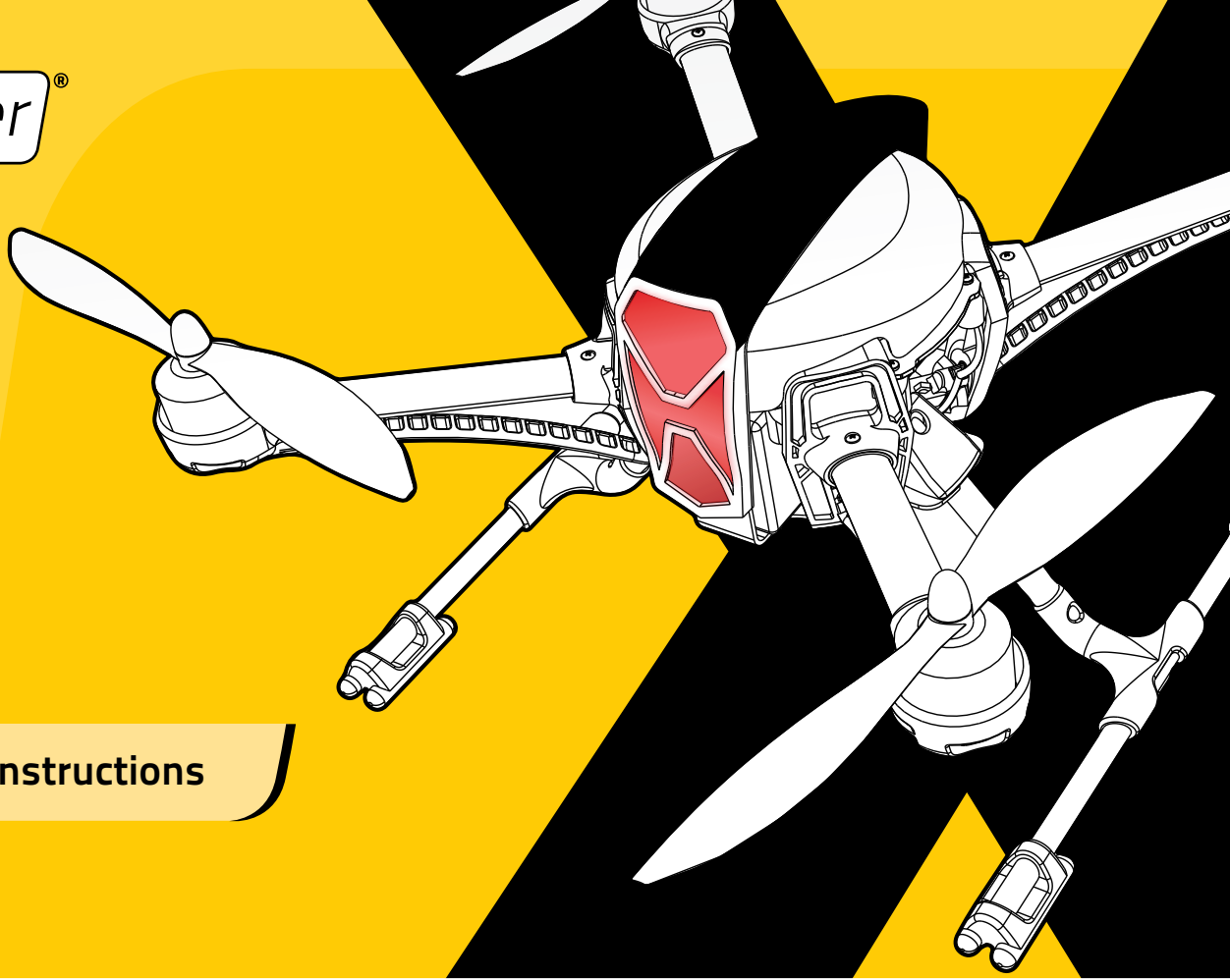

GB **Operating instructions**

88012RC (ArF)
88014RC (RtF)

CE

NovaX 350 **M1**

EVER WONDERED WHAT INNOVATION LOOKS LIKE?

NovaX 350.

TABLE OF CONTENTS

1. QUICK START INSTRUCTIONS 6
2. INTRODUCTION 8
3. MODULES 8
4. LATEST OPERATING INSTRUCTIONS 8
5. SYMBOLS 8
6. INTENDED USE 9
7. PRODUCT DESCRIPTION 9
8. DELIVERY CONTENTS 10
9. EYECONTROL APP 10
   - 9.1 Download 10
   - 9.2 Instructions and tutorials 10
10. VIDEO INSTRUCTIONS 10
11. FIRMWARE 10
12. SPARE PARTS 11
13. COMPATIBLE ACCESSORIES 11
14. WHAT YOU NEED FOR THE 'ArF' VERSION? 12
   - 14.1 Receiver 12
   - 14.2 Transmitter 12
15. SAFETY INSTRUCTIONS 12
   - 15.1 Persons/Product 12
   - 15.2 Before commissioning 13
   - 15.3 During Operation 13
   - 15.4 Outdoor flying locations 13
   - 15.5 Batteries 13
     - *15.5.1 General information 13*
     - *15.5.2 LiPo batteries 14*
   - 15.6 Miscellaneous 15
16. SAFETY FEATURES AND ACCIDENT PREVENTION 16
   - 16.1 Safety features 16
   - 16.2 Accident prevention 16
     - *16.2.1 Flight conditions 16*
     - *16.2.2 Area clearance 16*
     - *16.2.3 Learn from experienced pilots 16*
     - *16.2.4 No stunts/tricks at entry level 17*
17. LED – STATUS/INDICATIONS 17
18. ELECTRICAL AND ELECTRONIC CONNECTIONS AND COMPONENTS 17
   - 18.1 Wire slack 17
   - 18.2 Short cicuiting 17
   - 18.3 Electrostatic discharge 17
   - 18.4 Magnetic power 17
19. WEIGHTS AND PAYLOAD 18
20. PCB BOARD 18
21. PARTS AND COMPONENTS 19

22. DIMENSIONS 20
22.1 Short legs 20
22.2 Long legs 21
23. TERMS 22
23.1 Throttle 22
23.2 Elevator 22
23.3 Rudder 22
23.4 Aileron 22
23.5 Hover 22
23.6 Mode 1, Mode 2 22
23.7 GNSS 22
23.8 I.R.P.C 22
23.9 S.M.A.R.T 22
23.10 T.P.C.S 23
24. CANOPY 23
24.1 Removing 23
24.2 Mounting 23
25. BATTERY 24
25.1 Dangers 24
25.2 Charging 24
25.3 Installation 24
25.4 Storage 25
26. ASSEMBLY AND INSTALLATION 25
26.1 What you need 25
26.2 Unpacking 25
26.3 Installing the legs 25
26.4 Installing the PPM receiver 26
27. CALIBRATION 26
27.1 Calibrating via app or manually? 28
27.2 What to do if calibration fails 28
27.3 Switching between learning/calibration 28
27.3.1 Starting and ending a calibration procedure 28
27.3.2 Front LED colours when calibrating 29
27.4 Binding transmitter and receiver 29
27.4.1 Preparing the transmitter (Tx) 29
27.4.2 Binding 29
27.5 Learning the channels 30
27.5.1 Learning procedure 30
27.5.2 88014RC & 89102RC Auxiliary switch assignment 31
27.5.3 Assigning a switch to R.T.H. 31
27.5.4 Futaba® transmitters without 3-way-toggle-switch 32
27.6 Calibrating the gyro 32
27.7 Calibrating the compass 32
27.8 ESC (Electronic speed controller) 33
28. TESTING THE MOTORS 34
28.1 Flight modes 34
28.2 Motors 34
29. INSTALLING THE PROPELLERS 34
29.1 Carbon fibre 34
29.2 Plastic 34
30. FLIGHT MODES 36
30.1 Overview 36
30.2 Basic mode 36
30.3 Altitude mode 36
30.4 GPS mode 36

30.5 R.T.H. 37
30.5.1 Auto triggers 37
30.5.2 Manual trigger 37
30.5.3 Procedure 37
30.5.4 The importance of the GPS signal 37
30.6 I.R.P.C. 38
30.6.1 Programming and activating I.R.P.C. 38
30.6.2 Principle explained 39
30.7 Activated sensors 39
31. FLYING THE NOVAX 350 40
31.1 Visual inspection 40
31.2 Stick controls 40
31.3 Placement at start position 40
31.4 Starting the motors 40
31.4.1 Directional checks 40
31.4.2 Taking off 40
31.4.3 Landing 40
31.4.4 Trimming 41
31.4.5 Gradual learning 41
32. USING A CAMERA 42
32.1 Introduction 42
32.2 Attaching the camera 42
32.2.1 Action mounts 42
32.2.2 Double-sided tape 42
32.2.3 Alternative mounting methods 42
32.3 Attaching a gimbal 42
32.3.1 Gimbal platform 42
32.3.2 Connecting the gimbal 42
33. MAINTENANCE, CARE AND REPAIR 43
33.1 Regular cleaning and maintenance 43
33.1.1 Cleaning 43
33.1.2 Maintenance and repairs 43
33.2 Drift 43
33.3 After a crash 43
33.3.1 Visual inspection 43
33.3.2 Propellers 44
34. DISPOSAL 44
34.1 General 44
34.2 Batteries 44
35. TECHNICAL DATA 45
36. FCC COMPLIANCE STATEMENT 45
36.1 Statement according to FCC part 15.19 45
36.2 Statement according to FCC part 15.21 45
37. STATUS INDICATION TABLE 46
38. DECLARATION OF CONFORMITY 48
39. PRODUCT SUPPORT 48
40. LEGAL NOTES 48

1. QUICK START INSTRUCTIONS

1

See chapter/section: '15. Safety instructions' on page 12

2

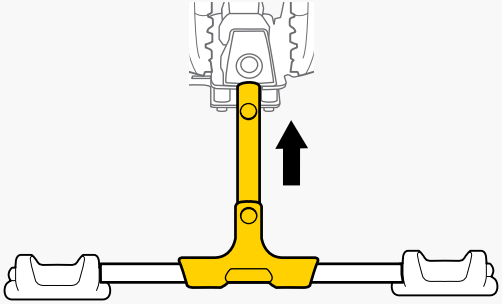

See chapter/section: '26.3 Installing the legs' on page 25

3

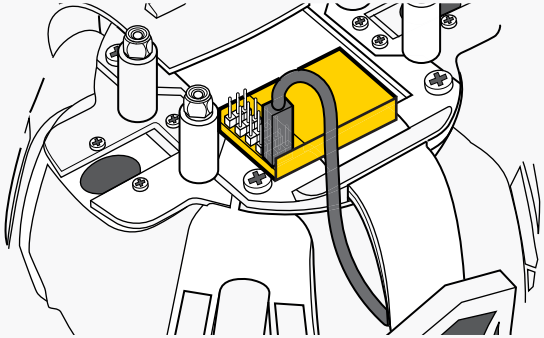

See chapter/section: '26.4 Installing the PPM receiver' on page 26

4

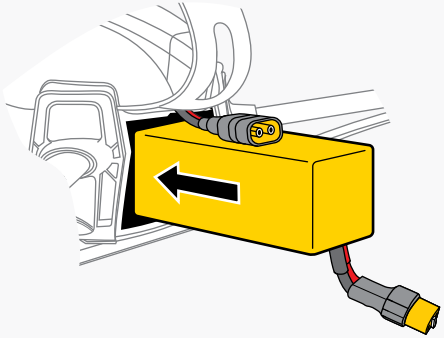

See chapter/section: '25. Battery' on page 24

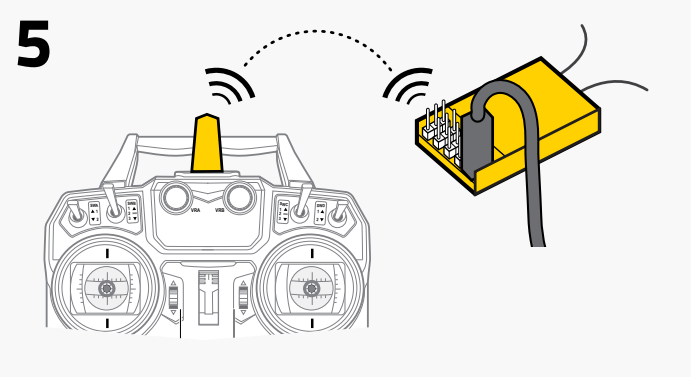

1. Binding: see chapter '27. Calibration' on page 26, then
2. Learning: see chapter '27. Calibration' on page 26

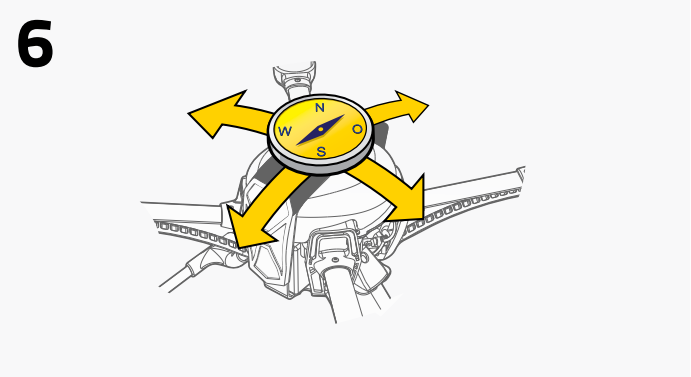

1. Gyro: see chapter '27. Calibration' on page 26, then
2. Compass: see chapter '27. Calibration' on page 26

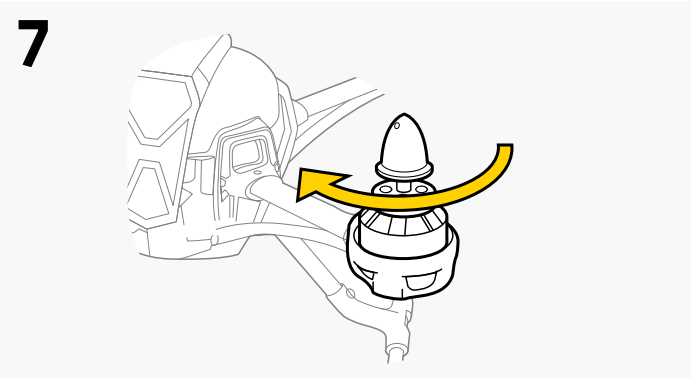

See chapter/section: '28. Testing the motors' on page 34

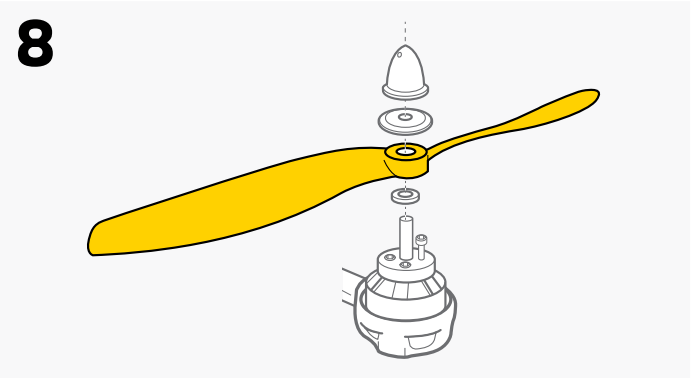

See chapter/section: '29. Installing the propellers' on page 34

2. INTRODUCTION

Dear customer,

Thank you for making the excellent decision to purchase this RC Logger® product. You now have a high-quality product with a name that represents outstanding products.

This product complies with the applicable National and European standards and regulations. We kindly request the user to follow the operating instructions, to preserve this condition and to ensure safe operation! These operating instructions relate to this product. They contain important notices on commissioning and handling. Please take this into consideration when you pass the product on to third parties.

Please keep these instructions for future reference!

All company names and product designations contained herein are trademarks of the respective owners. All rights reserved.

We wish you a great deal of enjoyment with your new RC Logger® product!

From here onwards the NovaX is simply referred to as »NovaX 350.

3. MODULES

M1

The operating instructions have been designed in a fashion that you as the end user can easily navigate them and operate the »NovaX 350 safely and to your full satisfaction. For easier handling, the operating instructions/ maintenance manuals are divided up into different modules.

Each set of instructions is labelled with its corresponding MODULE INDICATOR in the right bottom corner on the cover page (e.g. M1). Module indicators are used when referring you to other modules, or for drawing references between them.

4. LATEST OPERATING INSTRUCTIONS

ENGLISH: Please download the latest version of the operating instructions from our website at www.rclogger.com. Navigate to the product page and open the "Downloads" tab. Click on "Operating instructions" to start the download.

DEUTSCH: Bitte laden Sie die neueste Ausgabe der Bedienungsanleitung von unserer Website herunter, unter www.rclogger.com. Navigieren Sie bis zur Produktseite und öffnen Sie das Register "Downloads" . Klicken Sie auf "Operating instructions", um den Download zu starten.

5. SYMBOLS

RED stands for danger and alert. Read these sections always to avoid accidents and product damage.

BLUE provides you with additional useful information, and highlights important facts.

GREEN stands for user safety. GREEN also stands for good practice, protecting your product from damage.

YELLOW indicates steps that do not need to be performed if certain conditions are met.

6. INTENDED USE

The »NovaX 350 is a toy model quad copter solely designed for private use in the model making area and the operating times associated with this. The »NovaX 350 is not suitable for other types of use, including commercial applications.

Any use other than the one described can damage the device. Moreover, this involves dangers such as short circuit, fire and electric shock, etc. Observe the safety information under all circumstances! The product must not become damp or wet.

This product is not a toy and not suitable for children under the age of 14.

For safety and approval purposes (CE), you must not rebuild and/or modify this product. If you use the product for purposes other than those described above, the product may be damaged. In addition, improper use can cause hazards such as short circuiting, fire, electric shock etc. Read the instructions carefully and keep them.

Make this product available to third parties only together with its operating instructions.

Tap the model's full potential through regular practice.

7. PRODUCT DESCRIPTION

The »NovaX 350 consolidates rigid design, modern aeronautic technology as well as easy maintainability into one outstanding versatile multi-rotor platform. The concept provides pilots with an ideal platform for aerial photography applications while maintaining a fresh, different and extremely manoeuverable construction, allowing even the most challenging acrobatic flight. There is sufficient available surface to mount your favourite camera system such as the RC Logger PRO, GoPRO®, SOCAM® UltiMate or similar.

High-quality direct current brushless motors in connection with a specially developed control, permit a long, powerful flight operation. The new control and GNSS, I.R.P.C, S.M.A.R.T and T.P.C.S lead to great flight properties. Different flying programmes ensure that both beginners and experts will have fun.

You can operate the »NovaX 350 via:

> **Stock transmitter (88014RC (RtF))**

> **PPM (Pulse-position modulation) & your own transmitter (88012RC (ArF))**

The »NovaX 350 can be operated both indoors and outdoors during calm weather conditions. The in-built electronic controls can balance out small undesired changes to the flight altitude. The low weight of the »NovaX 350 makes it react sensitively to wind or draughts.

You can fly the »NovaX 350 in three different modes:

> **Basic, Altitude and GPS**

The model is designed for beginners as well as experienced model helicopter pilots.

The »NovaX 350 is essentially equipped with the handling of a normal helicopter. The differences, however, are in the detail. For helicopters, the torque balance is stabilised by special gyros (in the rudder function). For this, there are two different systems:

> Normal gyros, or

> Gyros with the "heading lock" function.

Normal gyros stabilise (cushion) the tail propeller against tipping motions which are caused

by the pilots (driving speed and/or elevator changes and/or external influences (e.g. side wind). A gyro with “heading lock” function has a holding action against these tipping motions. Both systems respond after a control command - e.g. “rudder to the left” and subsequent neutral positioning with the immediate stopping of the tipping motion.

In your »NovaX 350, unlike in standard helicopters, there are six gyros installed for the rudder, elevator and aileron functions. The installed gyros are - in comparison with standard gyros - neither to be described as normal gyros nor with “heading lock” function.

The gyros in the »NovaX 350 are linked together so that after the end of a control command the »NovaX 350 always attempts to reach neutral position (hovering flight). Of course, how well this works depends on the space available, the flight speed and/or the prevailing flight condition, the trim values of the »NovaX 350 and external flight conditions e.g. wind.

8. DELIVERY CONTENTS

1 x NovaX 350 copter

1 x R8 Radio System (89102RC) (**88014RC RtF only**)

1 x Balance charger (69018RC) (**88014RC RtF only**)

1 x 5200 mAh 3S 40C LiPo Battery Pack

1 x Propeller Set (ABS plastic)

1 x Washer and screw set for carbon fibre propellers (89106RC)

1 x Allen key (2.5 mm)

1 x Landing Gear Set (Long)

1 x Landing Gear Set (Short)

1 x Quick start guide

1 x Instructions for use (for download)

9. EYECONTROL APP

9.1 Download

> The EYECONTROL App is available in the Google Playstore for Android mobile devices and in the Apple App Store for iOS devices under the name **“EyeControl”**.

> Make sure the app is compatible with your device before you attempt to install it.

Google play

Download on the App Store

9.2 Instructions and tutorials

The app includes instructions and tutorials as well as step-by-step calibration guidance. Go through them before your begin calibrating or flying the »NovaX 350.

10. VIDEO INSTRUCTIONS

We provide video instructions and tutorials for setting up, calibrating and operating the »NovaX 350. Visit www.rclogger.com for more information.

11. FIRMWARE

RC Logger strives to continuously improve its products. For this reason, the firmware of the »NovaX 350 is being updated and improved to keep you as a customer happy.

All descriptions in these instructions are based on firmware **V1.0**. Future firmware versions may change, improve or enhance functions. New firmware versions with instructions are made available to you for download from www.rclogger.com.

12. SPARE PARTS

BN	Product Name
89089RC	NovaX Landing Gear
89090RC	NovaX Boom Set
89091RC	NovaX Propeller Set (ABS)
89092RC	NovaX ESC
89093RC	NovaX Motor
89094RC	NovaX Canopy
89095RC	NovaX Flight Control Board
89096RC	NovaX Power Board
89097RC	NovaX Body Frame
89098RC	NovaX Body Frame (carbon fibre)
89099RC	NovaX Small Parts Set
89100RC	NovaX Battery Pack
69017RC	LiPo (2-3S) Balance Charger
89102RC	NovaX Transmitter
89103RC	NovaX GPS
89104RC	NovaX Spinner Set
89105RC	NovaX Bumper Set
89106RC	NoveX Propeller Set (carbon fibre)

13. COMPATIBLE ACCESSORIES

BN	Product Name
89108RC	NovaX Transmitter
69017RC	LiPo (2 – 3S) Balance Charger
69018RC	LiPo/LiFe (2-4 S) Balance Charger
20019RC	Futaba 3 CH S.Bus Receiver
20020RC	Xtreme PPM + S.Bus Receiver Combo
20018RC	Fr SKY S.Bus-PPM Converter
89084RC	Gel Pad
89100RC	NovaX Battery Pack
10006RC	SOCAM UltiMate (RC Logger Edition)

14. WHAT YOU NEED FOR THE 'ArF' VERSION?

14.1 Receiver

- A quality PPM receiver, supporting a minimum of 6 channels (A 8-channel transmitter is recommended).
- A receiver connection cable (PPM receiver to PPM socket).

14.2 Transmitter

- 2.4 GHz transmitter
- 6 channels (A 8-channel transmitter is recommended)
- Min. two (2x) 3-way-toggle-switches
- Min. one (1x) 2-way-toggle-switch

15. SAFETY INSTRUCTIONS

Read the operating instructions carefully and especially observe the safety instructions. If you do not follow the safety instructions and information on proper handling in this manual, we assume no liability for any resulting personal injury or damage to property. Such cases will invalidate the warranty/guarantee.

15.1 Persons/Product

- The device is not a toy. Keep it out of the reach of children and pets.
- Do not leave packaging material lying around carelessly. These may become dangerous playing material for children.
- If it is no longer possible to operate the product safely, take it out of operation and protect it from any accidental use. Safe operation can no longer be guaranteed if the product:
  - is visibly damaged,
  - is no longer working properly,
  - has been stored for extended periods in poor ambient conditions, or
  - has been subjected to any serious transport-related stresses. The product must not become damp or wet. The »NovaX 350 uses delicate electronic components which are sensitive to temperature fluctuations and are optimised for a particular temperature range. Operating temperatures below 0°C must be avoided.
- Do not place the product under any mechanical stress.
- Handle the product carefully. Jolts, impacts or a fall even from a low height can damage the product.

15.2 Before commissioning

- Before every flight, check the functional reliability of your model and the transmitter. Watch out for any visible damage such as defective plug connections or damaged cables and wires.
- All moving parts of the model must run smoothly but should not have any play in their bearings.
- Before each operation check the correct and secure position of the propellers.
- Charge the flight battery according to the steps provided in chapter '24. canopy' on page 23 . Ensure sufficient residual capacity [battery tester (not included)] of the batteries inserted in the transmitter. If the batteries are empty, always replace the complete set, never individual cells only.
- Always switch on the transmitter first before connecting the battery to the »NovaX 350.
- Set the throttle to zero before connecting the battery to the »NovaX 350. The rotors **(3)** might run unintentionally!

15.3 During Operation

- When the rotors are running, make sure that neither objects nor body parts are in the rotating and suction area of the propellers.
- Do not take any risks when operating the model! Your own safety and that of your environment is solely down to you being responsible when dealing with the model.
- Improper operation may cause serious injury and property damage! Therefore make sure to keep a sufficiently safe distance to persons, animals or objects during operation.
- Select an appropriate location for the operation of the »NovaX 350.
- Fly the »NovaX 350 only if your ability to respond is unrestricted. The influence of tiredness, alcohol or medication can cause incorrect responses.
- Do not direct your model towards spectators or yourself.
- Motor, electronics and flight battery may heat up during operation. Wait 5 to 10 minutes before recharging or replacing the flight battery.
- Never switch off the transmitter while the »NovaX 350 is in use. After landing, always disconnect the flight battery first. Only then may the transmitter be switched off.
- In case of a defect or a malfunction, remove the problem before using the »NovaX 350 again.
- Never expose the »NovaX 350 or the transmitter to direct sunlight or excessive heat for an extended period of time.
- In the case of a severe crash (e.g. from a high altitude) the electric gyro sensors can be damaged and/or misadjusted. Therefore, full functionality must be tested before flying again without fail!
- In the event of a crash, the throttle should be immediately set to zero. Rotating propellers may be damaged if they come into contact with obstacles. Before flying again, these should be checked for possible tears or breakages!
- Observe the warn/safety signals emitted by the »NovaX 350 at all times to avoid damage (e.g. discharged battery).

15.4 Outdoor flying locations

- Always and only operate the »NovaX 350 in a designated RC flying area.
- Stay away from power lines, cellphone towers and other sources of potential interference, and restricted areas.
- Never fly the »NovaX 350 above people.
- Contact a local RC club nearby to find out more about designated and approved flying areas.

15.5 Batteries

15.5.1 General information

- Correct polarity must be observed while inserting the batteries.
- Remove the battery from the »NovaX 350 after every flight. Remove the batteries from the transmitter if you do not use it for a longer period of time. Discharged batteries may leak.

- Leaking or damaged batteries can cause acid burns when in contact with skin. Therefore use suitable protective gloves to handle corrupted and leaking batteries.
- Batteries must be kept out of the reach of children. Do not leave the batteries lying around. There is a risk that children or pets may swallow them.
- All batteries should be replaced at the same time. Mixing old and new batteries can lead to battery leakage and device damage.
- Batteries must not be dismantled, short-circuited or exposed to fire. Never recharge non-rechargeable batteries. There is a risk of explosion!
- Never mix regular batteries and rechargeable batteries!

15.5.2 LiPo batteries

After the flight, the LiPo flight battery must be disconnected from the »NovaX 350.

Lithium is a highly reactive chemical element with a high energy density. In the case of overcharging, the LiPo rechargeable battery packs might catch fire or even explode. Therefore, LiPo rechargeable battery packs must always be put on a fire-proof surface for charging and the charging process must be supervised.

In no case must the maximum permissible battery pack temperature of +60°C be exceeded Otherwise the rechargeable battery may explode!

15.5.2.1 Hazards of LiPo flight batteries

- Do not leave the LiPo flight battery connected when you do not use it (e.g. during transport or storage). Otherwise, the LiPo flight battery may be fully discharged. This would destroy it and render it unusable! There is also a danger of malfunction due to interference. The rotors could start up inadvertently and cause damage or injury.
- Rechargeable LiPo batteries are very susceptible to moisture due to the chemicals they contain! Do not expose them to moisture or liquids. Risk of explosion!
- Do not expose the charger or LiPo flight battery to high/low temperatures or to direct solar radiation. When handling LiPo batteries, observe the special safety information of the battery manufacturer!
- Never charge the LiPo flight battery immediately after use. Always leave the LiPo flight battery to cool off first (at least 5-10 minutes).
- Only charge intact and undamaged batteries. If the external insulation of the rechargeable battery is damaged or if the rechargeable battery is deformed or bloated, it must not be charged. In this case, there is immediate danger of fire and explosion!
- Never damage the exterior of a LiPo flight battery. Never cut the covering foil. Never stab any LiPo flight batteries with pointed objects.
- As the charger and the rechargeable LiPo flight battery both heat up during the charging procedure, it is necessary to ensure sufficient ventilation. Never cover the charger or the LiPo flight battery! Of course, this also applies for all other chargers and rechargeable batteries.
- Remove the LiPo flight battery that is to be charged from the model and place it on a fire-proof support (e.g. a plate). Keep a distance to flammable objects.
- Disconnect the LiPo flight battery from the charger when it is fully charged.
- Chargers may only be operated in dry rooms. The charger and the LiPo flight battery must not become damp or wet.
- Never take the rechargeable battery apart! The rechargeable battery may not be subjected to any mechanical strain!
- The contacts may not be short-circuited, as there is danger of fire and explosion!

- Do not expose rechargeable batteries to fire, as there is a risk of explosion!
- Keep rechargeable LiPo batteries away from children. Store rechargeable batteries in a dry, cool place.
- If a rechargeable battery is deformed or damaged during a crash, it must no longer be used. The same applies for “swollen” rechargeable batteries, or rechargeable batteries with other visible deformation or leaks. Do not attempt to charge such rechargeable batteries! Danger of fire and explosion!
- Dispose of such rechargeable batteries in an ecologically sound fashion.
- The general hazard notices for handling batteries and rechargeable batteries also apply to rechargeable LiPo batteries.

15.5.2.2 Total discharge

- Since discharging below 3.0 V per cell would lead to permanent damage of the rechargeable battery pack, this total discharging is to be prevented as far as possible.
- For safety reasons, programmable cruise controls/flight control systems should be set in such a way that the undervoltage detection has already responded before a voltage of 3.0 V per cell is reached (e.g. 3.2 V). Alternatively, optical undervoltage displays are also recommended.

15.5.2.3 Correct dimensioning

- As the current drawn rises, the battery pack warms and the usable capacity is lowered. The ideal operating temperature during discharge is between **+20** and **+40 °C** and must not exceed **+60 °C** even under extreme load.
- The maximum short-time discharge current is stated in the technical data sheets or can be read directly from the battery pack. The value “C” always refers to the capacity value of the respective battery pack.

Example:
A battery pack with a capacity of 2100 mAh and “20 C” can be discharged with 2100 mA x 20 = 42 A maximum.

- However, the maximum permissible continuous current is clearly lower. If there are no precise manufacturer’s specifications, the battery pack should not be discharged with more than approx. 50 % of the maximum permissible surge current over a long term.

15.6 Miscellaneous

- Consult an expert when in doubt about operation, safety or connection of the device.
- Maintenance, modifications and repairs are to be performed exclusively by an expert or at a qualified shop.
- If you have questions which remain unanswered by these operating instructions, contact our technical support service or other technical personnel.

16. SAFETY FEATURES AND ACCIDENT PREVENTION

Connecting a non-fully charged battery to the »NovaX 350 can lead to undervoltage detection, thus the motors will not start.

16.1 Safety features

The »NovaX 350 has a range of built-in safety features, which protect the model from damage and/or should reduce possible damage to a minimum. You can identify some of the protection mechanisms by observing the behaviour of the front and rear LEDs.

Please refer to the table '37. Status Indication Table' on page 46 for an overview of LED statuses and buzzer behaviour.

The following are indicated or monitored:

- Properly bound transmitter
- Signal strength
- Flight mode
- Permanent reception interferences (Emergency landing is initiated after approx. 5 s, motors are turned off automatically)
- Flight battery condition
- Permanent voltage undercut of flight battery (Emergency landing is initiated, motors and LEDs are turned off automatically)
- Motor blockage (All motors are turned off when one or more propellers are blocked).

16.2 Accident prevention

The »NovaX 350 is a 'professional' toy. Professional in this respect means having sufficient knowledge of its functions and being aware of the possible dangers involved. Careless operation can cause serious damage and injury. Fly the »NovaX 350 with necessary caution and do not try any manoeuvers you do not feel comfortable with.

16.2.1 Flight conditions

- Only fly the »NovaX 350 outdoors and during good weather conditions.
- Do not fly the »NovaX 350 during adverse weather (rain, snow, strong winds, etc.).
- Do not fly without having covered the electronics (canopy **(7)**). Please ensure that no moisture enters the central piece. Never fly when it rains!

16.2.2 Area clearance

- Keep a clearance area of at least 20 x 20 m.
- Do not fly the »NovaX 350 in the vicinity of people and animals.

16.2.3 Learn from experienced pilots

The best learning experience is provided by pilots who have experience in flying this type of aircraft.

Do not be discouraged by the »NovaX 350's range of features and functions. The learning curve from beginner to professional is steep.

We recommend you consult a model craft flight trainer or an experienced model craft helicopter pilot to provide you the necessary guidance to get started with the »NovaX 350.

16.2.4 No stunts/tricks at entry level

We strongly advise you to refrain from stunts until you master the »NovaX 350 in normal flying conditions.

Once you master the »NovaX 350 you may gradually venture into more advanced terrain. Again, advanced flying has its own learning curve and can easily lead to accidents and product damage if you lose control over the »NovaX 350.

17. LED – STATUS/INDICATIONS

Refer to '37. Status Indication Table' on page 46 for a complete overview. Study the table carefully and consult it whenever colour indications are important.

18. ELECTRICAL AND ELECTRONIC CONNECTIONS AND COMPONENTS

18.1 Wire slack

It is important to avoid wire slack. You can eliminate wire slack by twisting the wires. Note **[Fig. 1]**.

Fig. 1

18.2 Short cicuiting

- The power board **(PCB-6)** must never touch the carbon fibre frame. Touching can result in an immediate short circuit.
- Make sure you do not touch the PCB boards with any wires or connectors. Be especially careful when the flight battery is connected.

18.3 Electrostatic discharge

Electrostatic discharge can damage electronic components. Discharge yourself before you touch them and do not leave sweat residue.

18.4 Magnetic power

Keep the »NovaX 350 away from magnetic sources. The »NovaX 350 uses magnetic components for navigation purpose and they may be impaired or damaged by external magnetic forces.

19. WEIGHTS AND PAYLOAD

This is an important section to read. If you do not follow the instructions, the »NovaX 350 may not take off or even be damaged.

Wind conditions, altitude and temperature can have an impact on the takeoff weight. Therefore, the actual payload should preferrably be less than the maximum permissible payload.

38.4 oz (~1090 g)	+	≤ 14.5 oz (~410 g)	≤	52.9 oz (~1500 g)
Operating Empty Weight (OEW) (incl. battery, camera tray)		Payload (camera, gimbal)		Max. takeoff weight (MTOW)

If the takeoff weight is exceeded the »NovaX 350 will not take off.

20. PCB BOARD

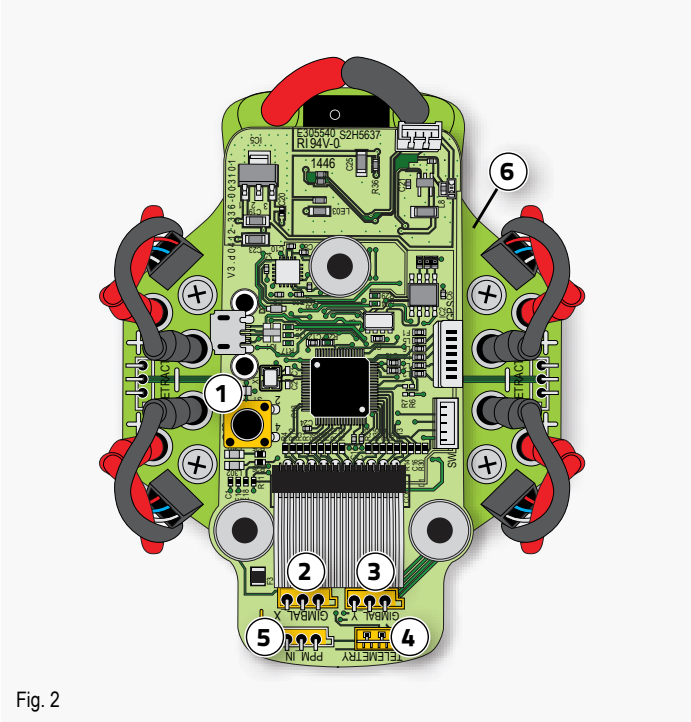

Fig. 2

PCB-1 Button
PCB-2 GIMBAL_X axis
PCB-3 GIMBAL_Y axis
PCB-4 TELEMETRY connector
PCB-5 PPM_IN connector
PCB-6 Power board

21. PARTS AND COMPONENTS

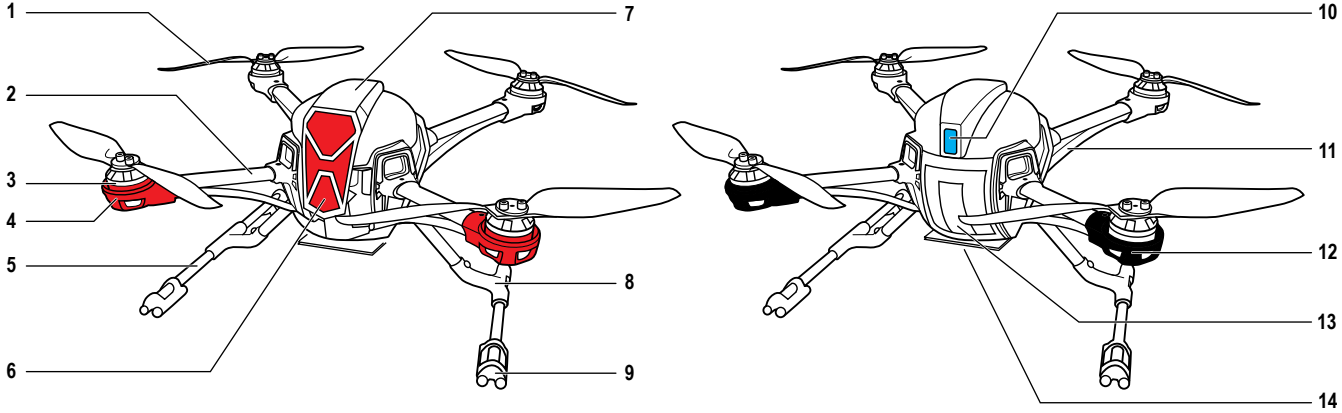

1 Propeller
2 Motor arm
3 Rotor
4 Motor mount (front, red)
5 Landing leg (detachable)
6 Front LED
7 Canopy
8 T-joint
9 Landing rubber
10 Rear LED
11 Elliptical
12 Motor mount (rear, black)
13 Battery strap
14 Camera platform

22. DIMENSIONS

22.1 Short legs

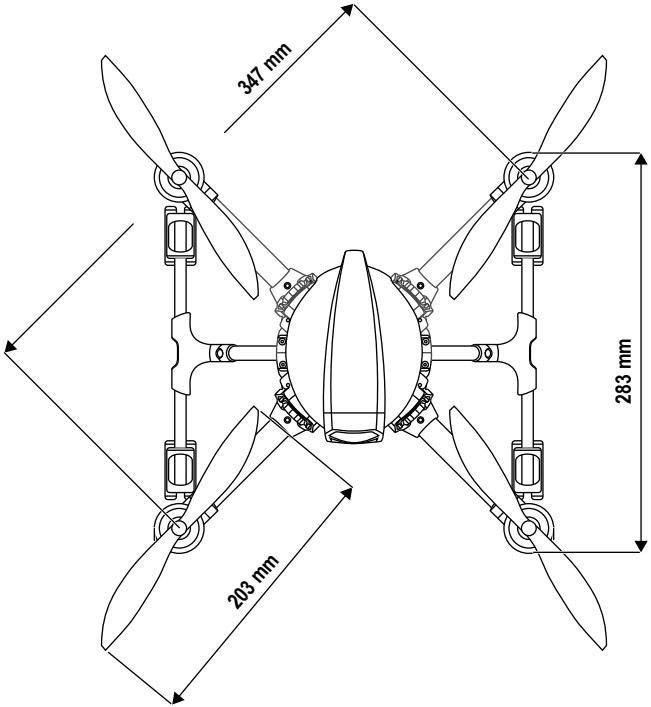

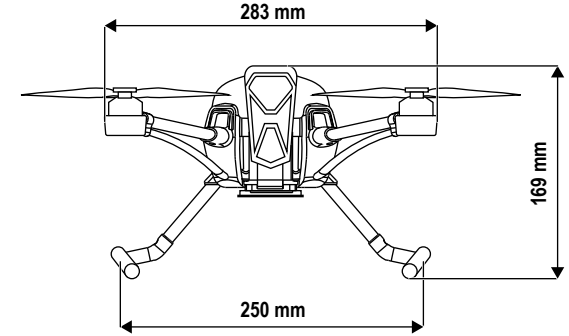

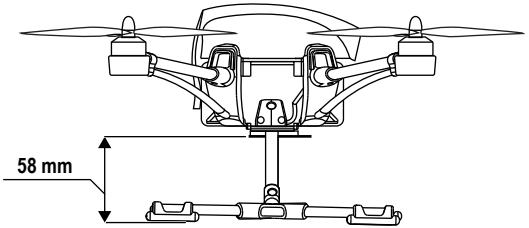

22.2 Long legs

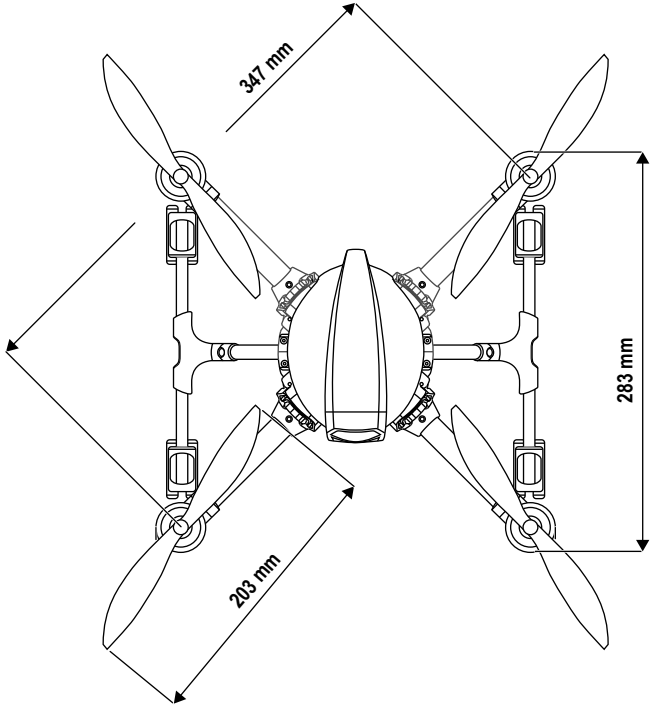

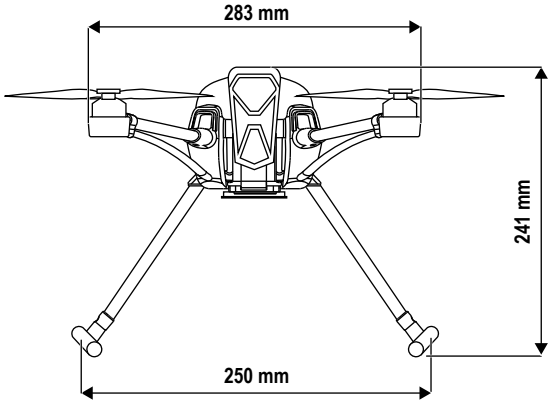

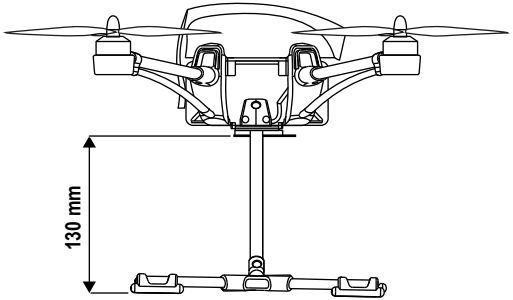

23. TERMS

23.1 Throttle

Throttle can be compared to a vehicle's gas pedal. More throttle increases propeller speed and altitude and less throttle reduces propeller speed and altitude.

23.2 Elevator

Elevator denotes the movement around the lateral axis which can be compared to the nodding of a head. Through this, the »NovaX 350 gains flight speed forwards or backwards or decelerates.

23.3 Rudder

Rudder denotes the rotation of the »NovaX 350 around the rudder axis (vertical axis). This movement either occurs unintentionally due to the speed torque of the propellers or intentionally as a flight direction change. For the »NovaX 350, this movement is controlled through speed variation of the individual propellers.

23.4 Aileron

Aileron denotes the movement around the longitudinal axis which can be compared to the sideways rolling of a ball (or the sideways crawl of a crab). In this way, through lifting one side the »NovaX 350 moves to the side independently of its forward direction.

23.5 Hover

Hover denotes a flight status in which the »NovaX 350 neither rises nor falls so that the upwards directed uplift force is equal to the downwards directed weight.

23.6 Mode 1, Mode 2

Mode 1 and Mode 2 refer to the stick arrangement of the transmitter.

23.7 GNSS

- GNSS stands for Global Navigation Satellite System and enables you to precisely fix a position.
- R.T.H. (Return To Home), the GPS mode and T.P.C.S. (Task Point Command System) make use of GNSS.

23.8 I.R.P.C

- I.R.P.C stands for Intelligent Relative Positioning Control. It utilizes compass and positioning data to control the »NovaX 350 relatively to the take-off position.
- Activate and configure I.R.P.C. in the EYE CONTROL app. Also see chapter '30.6 I.R.P.C.' on page 38.

23.9 S.M.A.R.T

- S.M.A.R.T or Software Managed Auto Return Technology enables the pilot to quickly and safely recover the »NovaX 350 in the event of loss of control over the »NovaX 350.
- Configure S.M.A.R.T. in the EYE CONTROL app. The AUTO function marks the motor start location as home and the pilot can deactivate the function again to take back control as soon as they see the situation under control.
- To learn more about S.M.A.R.T., refer to the product website and also see chapter '30.5 R.T.H.' on page 37.

23.10 T.P.C.S

> T.P.C.S will be implemented in future firmware versions.

> T.P.C.S or Task Point Command System differs from commonly known way-points, enabling the pilot to programm a full set of tasks (e.g. a full 360° rotation) to be completed at each defined task point. **[Fig. 3]** illustrates this.

> T.P.C.S is activated in and controlled through the EYECONTROL app.

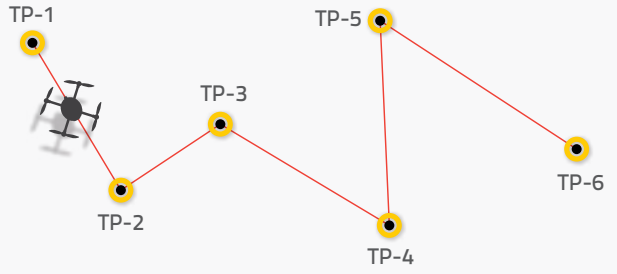

Fig. 3

24. CANOPY

24.1 Removing

- **After removing the canopy, the PCB boards are exposed. Do not touch any electronic components. Electrostatic discharge causes damage.**
- **Never remove the metal shield!**
- **Never use metal screws in the canopy!**

Unlock the two locks on either side of the canopy and carefully pull it off with one hand. **Caution!** There is one cable connecting the canopy and the main board.

24.2 Mounting

GPS and compass are direction-dependent. Therefore, when mounting the canopy the front LED must point to the »NovaX 350's front.

Pay special attention to the wires and connectors; do not pinch wires! Do not apply any force when replacing the canopy!

25. BATTERY

25.1 Dangers

Only use the supplied flight battery or a suitable spare battery from RC Logger.

After the flight, the LiPo flight battery must be disconnected from the »NovaX 350.

Make sure the transmitter is turned on before connecting the battery to the »NovaX 350.

Avoid unexpected startup. This can lead to serious injury and damage the »NovaX 350.

25.2 Charging

For charging, use the supplied balance charger (69018RC, only supplied with 88014RC RtF) or a charger capable of charging the »NovaX 350 flight battery. Read the operating instructions supplied with the charger before charging.

25.3 Installation

Before you connect the battery to the »NovaX 350 turn on the transmitter. An unbound (transmitter and »NovaX 350 cannot communicate) aircraft is considered uncontrolled.

1. Turn the »NovaX 350 back to front.
2. Follow the illustrations in **[Fig. 4]**, showing how to insert and connect the flight battery.

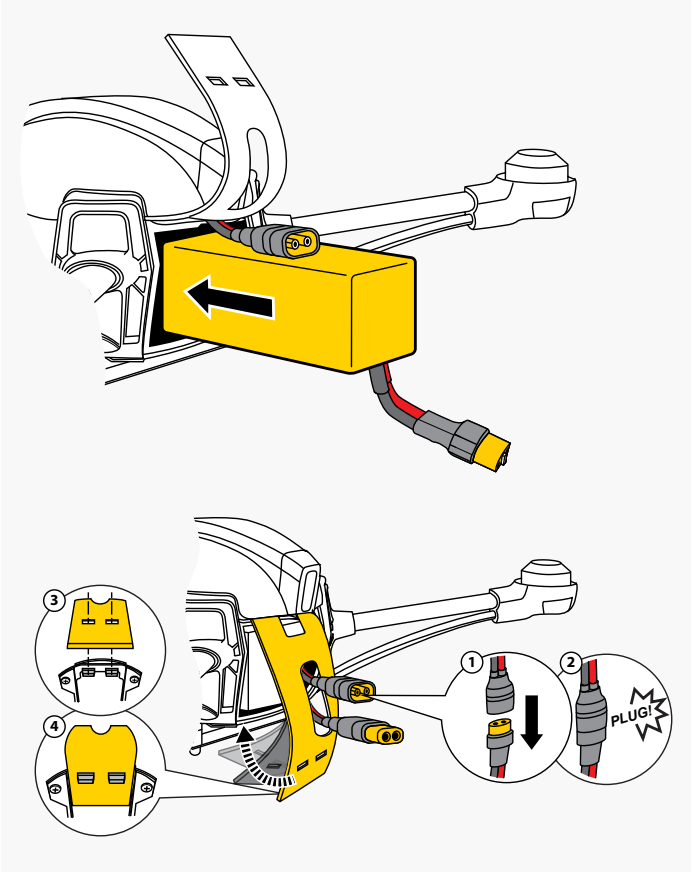

Fig. 4

The »NovaX 350 is now live! Stay alert!

25.4 Storage

- After every flight remove the battery from the »NovaX 350 and only then turn off the transmitter.
- Store the battery in a dark, cool and dry place, away from the reach of children. Moisture and direct sunlight can lead to battery damage or even explosion.
- It is best to use a specially designed storage container for LiPo batteries available from specialist shops.

26. ASSEMBLY AND INSTALLATION

The »NovaX 350 was designed in such a fashion that assembly does not require any special knowledge and can easily be completed in a few steps. Nevertheless, you are strongly advised to read through the respective chapters before you start to install components.

Assembly is divided into the following steps:

Step	Chapter
1	26.1 What you need
2	26.2 Unpacking
3	26.3 Installing the legs
4	26.4 Installing the PPM receiver

26.1 What you need

- The supplied Allen key (2.5 mm)
- Loctite® (Blue)

26.2 Unpacking

- Work on a soft and clean mat.
- Open the box, take out all parts and open the polybags.

26.3 Installing the legs

Two sets of legs **(5)** are supplied: long and short. The long legs offer more ground clearance. Follow the installation diagrams **[Fig. 5]**.

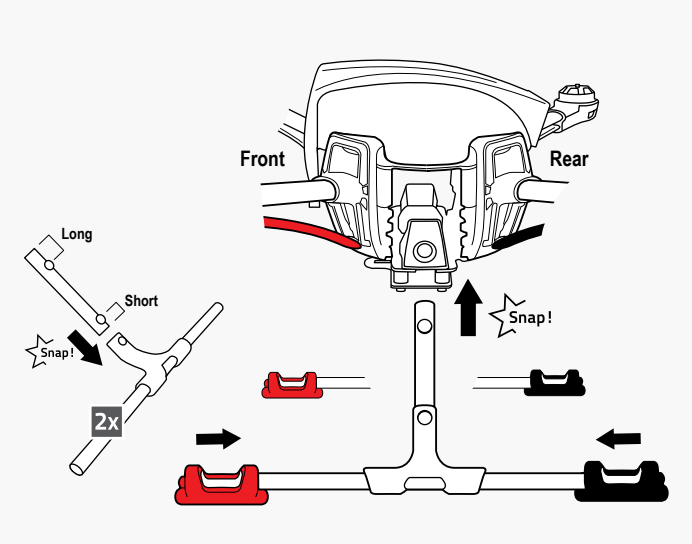

Fig. 5

26.4 Installing the PPM receiver

The PPM receiver uses PPM technology. Do not confuse PPM (Pulse-position modulation) and PWM (Pulse-width modulation).

Study the manufacturer's instructions supplied with the PPM receiver and pay special attention to information/ instructions on pin allocation.

WARNING! Your PPM receiver may feature wire antennas to improve reception. DO NEVER let the wire antennas touch any PCB board, carbon fibre part, electrical component or metal component. The electronic system may immediately be destroyed!

NEVER install a PPM receiver inside the canopy!

1. Study the installation diagrams in **[Fig. 6]**.
2. Turn the »NovaX 350 upside down and place it on a soft and stable surface **[1]**.
3. Loosen and remove the four nuts that hold the camera platform in place and remove the platform **[2]**.
4. Cut a double-faced adhesive foam pad that is half the width of and as long as the receiver. Align and stick the foam pad along the left edge of the receiver underside. With the header pins facing up, stick the receiver on the »NovaX 350's underside. Connect the PPM and telemetry cable to the corresponding header pins on the receiver. **[3]**.
5. Replace the camera platform and tighten the nuts **[4]**.
6. Affix one antenna on each boom **[6]**. Pay attention to these points:
   - Place the antennas at a 90° angle to each other. See **[5]**.
   - Antennas must not touch.
   - Keep antennas as straight as possible.
   - Keep antennas away from noise (motor or speed controller).
   - A bare antenna wire must never touch conductive (metal and carbon fibre) parts of the »NovaX 350. A minimum distance of 15 mm is required between conductive materials and a bare antenna wire.

27. CALIBRATION

Make sure you read through the entire calibration chapter before you start calibrating the **»NovaX 350.**

If you fly the »NovaX 350 for the first time it is necessary to calibrate it prior to the first take-off.

Remove the propellers before you proceed!
Only after you have successfully completed the calibration mount the propellers again.

Calibration is divided into the following steps:

Step	Chapter
1	27.4 Binding transmitter and receiver
2	27.5 Learning the channels
3	27.6 Calibrating the gyro
4	27.7 Calibrating the compass
5	28. Testing the motors
6	29. Installing the propellers

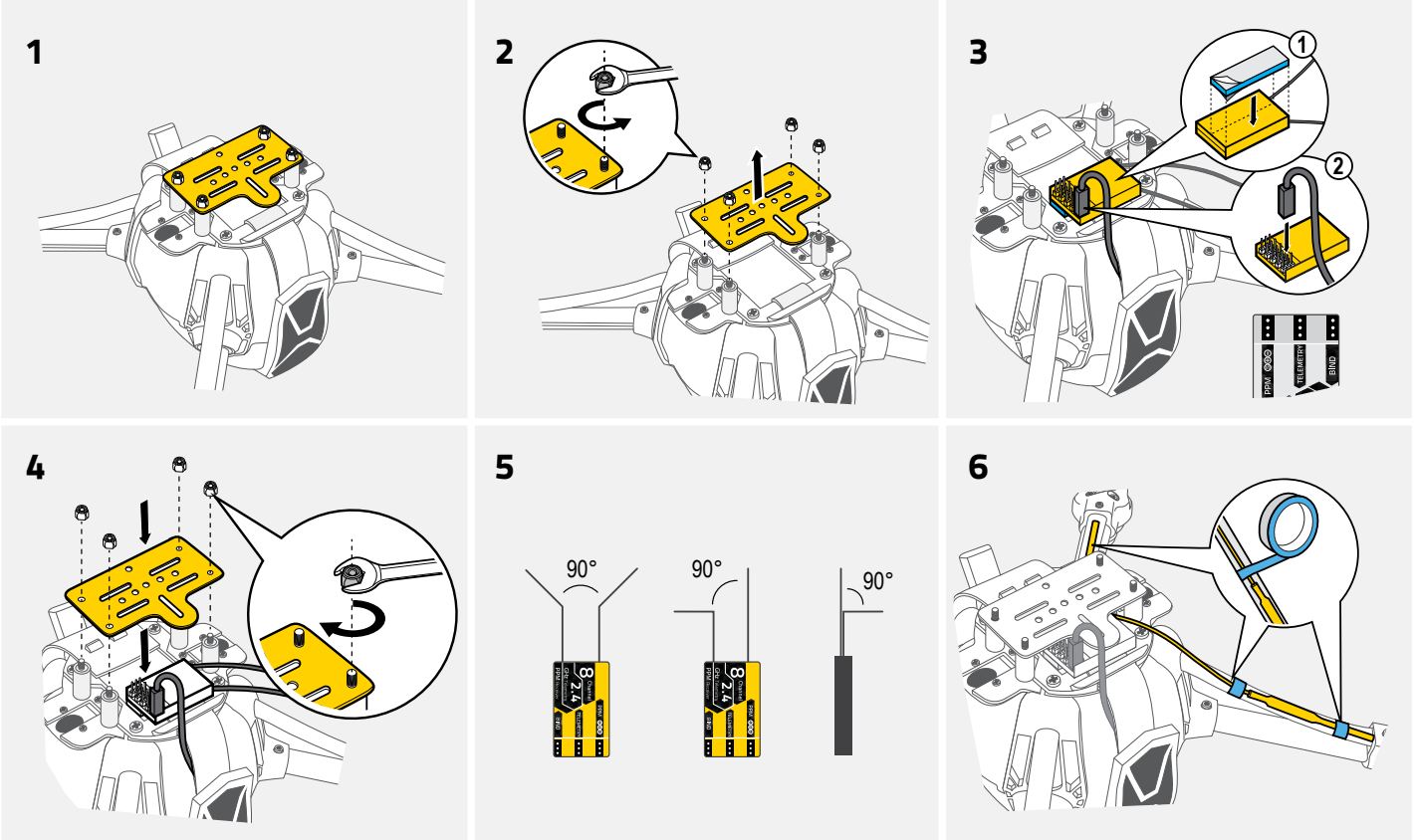

Fig. 6

27.1 Calibrating via app or manually?

The recommended way to calibrate the »NovaX 350 and learn the channels is via the EYECONTROL app (iOS and Android). Follow the instructions given in the app. Note **[Fig. 7]**.

> ➡ If you decide for the app, only follow the in-app instructions and directly continue with installing the propellers after completing the calibration.

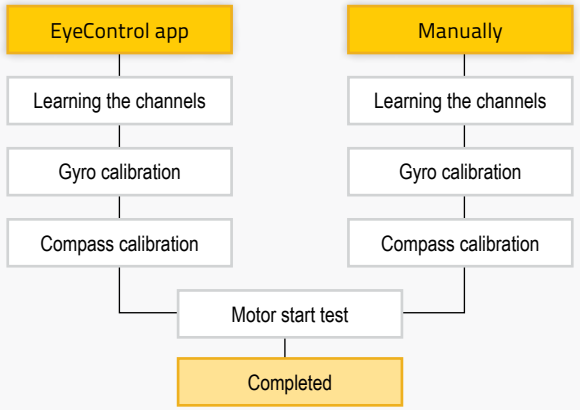

Fig. 7

27.2 What to do if calibration fails

Each of the calibration procedures can fail and is indicated by 3 prominent beep sounds (3 beeps). For example, the transmitter learning procedure fails if you provide wrong stick input. In case of failure:

1. Move away from magnetic interferences
2. Disconnect the flight battery and re-connect it
3. Restart the procedure.

Successfully completed calibration procedures can be skipped.

27.3 Switching between learning/calibration

You do not need to perform the calibrations in sequence. All calibrations must be performed.

27.3.1 Starting and ending a calibration procedure

1. Remove the canopy.
2. Press and hold the PCB button on the flight control board for approx. 2 seconds to put the »NovaX 350 into the calibration mode. If you decide to calibrate channels, gyro and compass in one attempt, there is no need to repeat this action before each calibration procedure.
3. Switch to a calibration procedure (channel learning, gyro, or compass). See **[Fig. 8]**.
4. Double tap the PCB button (2x) to start the calibration procedure. Pay attention to the colour indications provided by the front LEDs. See '27.3.2 Front LED colours when calibrating' on page 29.
5. Tap the PCB button once (1x) to complete a particular calibration procedure.
6. Replace the canopy.

Diagram **[Fig. 8]** illustrates the functions of the PCB button:

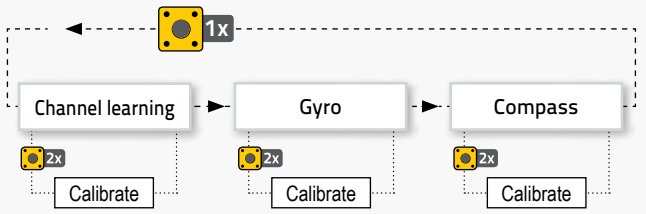

Fig. 8

27.3.2 Front LED colours when calibrating

27.4 Binding transmitter and receiver

88014RC RtF: Receiver and transmitter were bound during production. Proceed with channel learning.

If re-binding should become necessary at some point, follow the given steps.

88014RC RtF: Refer to the operating instructions of the transmitter and receiver (89102RC) for more information on the binding and learning procedure.

> Use your own 2.4 GHz transmitter to control the »NovaX 350; operate it via PPM.

> Please carry out the configuration of the »NovaX 350 as described in this chapter. Channel learning is essential as otherwise the »NovaX 350 will not recognize your transmitting equipment.

> If you use your computer remote control, program it without a mixer in the standard program.

> Basically, you can configure the controls to your liking. However, it is recommended that beginners follow the given examples.

> By default, the »NovaX 350 is configured to MODE 2.

> If your transmitter does not provide two 3-way-toggle-switches please refer to the workaround explained in '27.5.4 Futaba® transmitters without 3-way-toggle-switch' on page 32.

The following sections will guide you through the installation process and set-up. Do not skip any sections as they are interdependent.

27.4.1 Preparing the transmitter (Tx)

1. Ensure that all mixing is deactivated, throttle curves are linear, trims are centered and all travel is set to maximum range.
2. Move the throttle stick to its zero position (88014RC RtF: Make sure that the throttle stick is in its mid-position; the sticks are spring loaded and are centered by default).
3. Set all switches to their default positions (0 or 1 respecively).
4. Connect the supplied PPM receiver to the **PPM_IN (PCB-5)** and **TELEMETRY (PCB-4)** port at the front of the power board.

27.4.2 Binding

> Bind the PPM receiver with your transmitter. Refer to the operating instructions of your transmitter and PPM receiver.

> **Futaba® FASST systems:** use the 7 channel mode.

> In the event that no PPM receiver is detected, the learning mode is not going to be activated.

27.5 Learning the channels

You must reserve one 2-way-toggle-switch for the R.T.H. (Return To Home) function. When R.T.H. is triggered it will overwrite all settings of channel 5 (flight modes).

> A beep confirms a successfully learned channel.

> A blink code (e.g. 1 blink) indicates which channel is to be learned next.

> **Auxiliary switch:** Slowly move the switch through all positions and back to its starting position.

> Assign a 3-position-toggle switch to channel 5 and channel 6.

27.5.1 Learning procedure

1. Carefully remove the canopy. Do not damage any component!
2. Turn the transmitter on and switch it to "H1 helicopter" mode **(not applicable to 88014RC RtF)**.
3. Select a new model on your transmitter.
4. Connect the flight battery.
5. Switch to the channel learning procedure. Refer to '27.3 Switching between learning/calibration' on page 28.
6. The front large RGB LED turns solid red. The front small blue LED (on front light panel) indicates operational status (solid = not active, blinking = active).
7. Start the calibration procedure. The blue LED starts to blink. **88014RC RtF:** Observe '27.5.2 88014RC & 89102RC Auxiliary switch assignment' on page 31.
8. Learn the channels according to the following table. Pay attention to the LED blink codes.
9. Complete the procedure.

LED	Control	Channel
	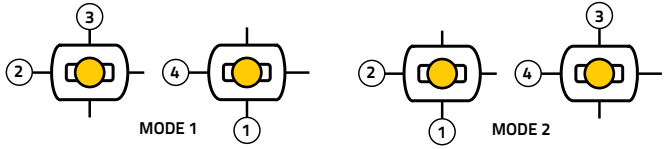 1 Throttle, 2 Rudder, 3 Elevator, 4 Aileron	
1 blink	Throttle – Move to min. and back (mid-position)	Ch 1 (mode-dependent)
2 blinks	Rudder – Move to left and back	Ch 2 (mode-dependent)
3 blinks	Elevator – Move to top and back	Ch 3 (mode-dependent)
4 blinks	Aileron – Move to the left and back	Ch 4 (mode-dependent)
5 blinks	Flight mode selection switch (3 positions): » Pos 1: GPS » Pos 2: Altitude » Pos 3: Basic	Ch 5
6 blinks	Bank selection switch (3 positions): » Pos 1: AP Mode » Pos 2: Sport Mode » Pos 3: Custom Mode (Set by pilot)	Ch 6
7 blinks	Retractable legs (2 positions)	Ch 7
8 blinks	Gimbal control (2 positions)	Ch 8

It is possible to complete the learning procedure after having learned channel 6 by waiting for at least 8 seconds. When using a 6-channel transmitter, a timeout function (8 seconds) will automatically complete the learning.

27.5.2 88014RC & 89102RC Auxiliary switch assignment

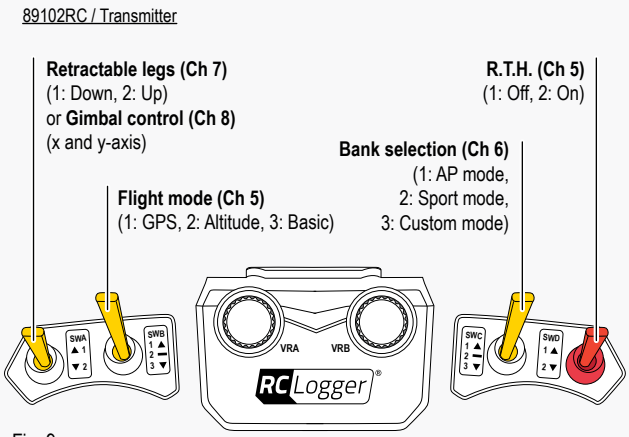

Fig. 9

27.5.3 Assigning a switch to R.T.H.

> **88014RC RtF:** There is no need to perform this step.

> You must assign a 2-way-toggle switch to R.T.H. Do not assign other functions to this switch.

27.5.3.1 How it works

Channel 5 (Ch 5) is assigned to the flight modes, and each flight mode is triggered by a specific channel offset value: GPS (-100 %), Altitude (0), and Basic (+100 %). R.T.H. overwrites the flight modes (see '27.5.3.2 Programming R.T.H.' on page 31) by applying a (+/-) 30 % channel offset to channel 5, thus triggering R.T.H.

[Fig. 10] illustrates the given explanation, where **A** shows channel 5 settings in normal flight (GPS mode is activated) and **B** the channel settings when R.T.H. is triggered.

27.5.3.2 Programming R.T.H.

Regardless of the transmitter model you use, the principle behind R.T.H. is the same. Programm R.T.H. as follows.

1. Assign an aux. 2-position-toggle switch to channel 5.
2. Set an offset large enough so that the channel offset will be (+/-) 30 % after R.T.H. is triggered. For overwriting GPS and Altitude modes, set a positive offset, and a negative offset for overwriting the Basic flight mode.
3. Now test your settings. Move the 2-position-toggle switch (R.T.H. switch) to its default position (position 0 or 1 respectively). Switch the channel 5 switch (flight modes) through all positions and check for required offsets: GPS (-100 %), Altitude (0), and Basic (+100 %).
4. Switch the R.T.H. switch to position 1 or 2, respectively. Check for required channel offset: (+/-) 30 % for channel 5 and R.T.H.

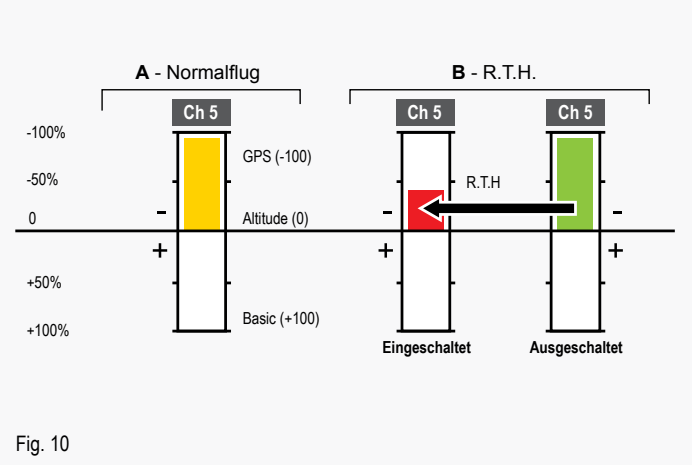

Fig. 10

27.5.3.3 6-channel transmitters:

When using a 6-channel transmitter, trigger R.T.H. by turning the transmitter off. Additionally, set channel 5 to +30 % in the 'fail safe' status. Refer to the user instructions of your transmitter and receiver.

27.5.4 Futaba® transmitters without 3-way-toggle-switch

In case you do not have a free 3-way toggle switch available on your transmitter, you may assign a 2-way-toggle-switch instead and shift your channel END POINT after performing the learning procedure on your transmitter. See **[Fig. 11]**.

> By default the END POINT for channel 5 (flight mode switch) is set to "135 100". This default setting lets the 2-way-toggle-switch function as the bank selection switch (AP mode, Sport mode).

> To toggle between these two modes instead, simply shift the END POINT to "0 100" for the affected switch. See **[Fig. 11]**.

> You may use the same approach for channel 6 (AP, Sport and Custom mode).

```
LINKAGE MENU          1/2
SERVO        :  SUB-TRIM
MODEL SEL.   :  REVERSE
MODEL TYPE   :  FAIL SAFE
FREQUENCY    :  END POINT
FUNCTION     :  THR CUT
```

```
END POINT             2/2
LIMIT
AUX1 0   100 6 100 135
AUX2 135 100 7 100 135
AUX3 135 100 8 100 135
AUX4 135 100   100 135
```

Fig. 11

27.6 Calibrating the gyro

You MUST perform this step with precision or the »NovaX 350 won't fly properly.

1. Study **[Fig. 12]**.
2. Switch to the gyro calibration procedure. Refer to '27.3 Switching between learning/calibration' on page 28.
3. Start the procedure.
4. **Replace the canopy**.
5. Place the »NovaX 350 on a horizontal and level surface **[1]** and wait for a single beep.
6. Rotate the »NovaX 350 by 180° about its vertical axis **[2] [3]** .
7. 2 beeps confirm the successful completion of the gyro calibration procedure.
8. Remove the canopy.
9. Complete the procedure.

27.7 Calibrating the compass

You MUST perform this step with precision or the »NovaX 350 won't fly properly. Perform the compass calibration in an open area, away from metal objects, high-voltage powerlines, radio towers/masts and any portable or stationary devices sending and receiving radio signals in order to eliminate magnetic interference.

1. Study **[Fig. 13]**.
2. Switch to the compass calibration procedure. Refer to '27.3 Switching between learning/calibration' on page 28.
3. Start the procedure.
4. Replace the canopy.

5. Hold the »NovaX 350 horizontally and its nose pointing away from you.
6. Rotate the »NovaX 350 two times (2x) about its lateral axis by 360°as shown in step **[1]**.
7. Rotate the »NovaX 350 clockwise about its vertical axis by 90°as shown in step **[2]**. Wait for a single beep.
8. Rotate the »NovaX 350 two times (2x) about its longitudinal axis by 360°as shown in step **[3]**.
9. Rotate the »NovaX 350 two times (2x) clockwise about its vertical axis by 360° as shown in step **[4]**.
10. Wait for confirmation: succeeded (2 beeps), failed (3 beeps).
11. Remove the canopy.
12. Complete the procedure.

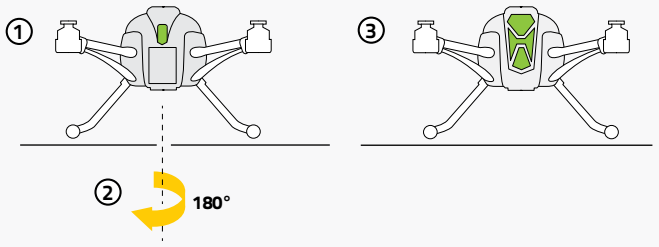

Fig. 12

27.8 ESC (Electronic speed controller)

ESC calibration is performed during production and does only need to be performed again after replacing the ESC. If you encounter problems with your ESC then our support service may instruct you to re-calibrate the ESC. Do not perform this calibration unless you are asked to do so.

Remove the propellers before you proceed.

ESC calibration cannot be started in calibration mode.

1. Connect the flight battery to the »NovaX 350.
2. Remove the canopy.
3. Press and hold the PCB button until the motor driver starts to beep.
4. After you have successfully calibrated the ESC, disconnect the battery.
5. Replace the canopy.

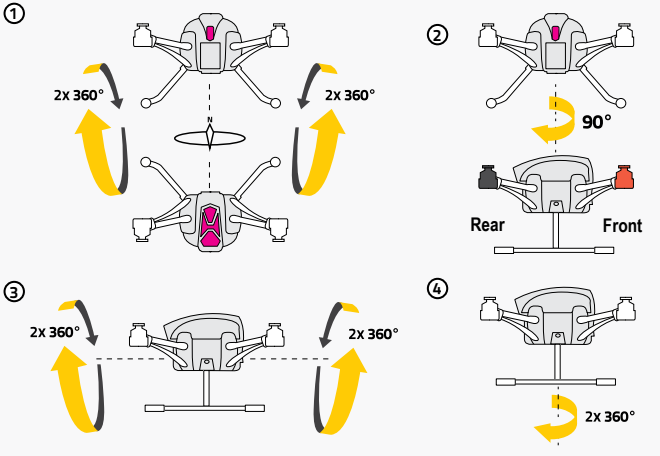

Fig. 13

28. TESTING THE MOTORS

IMPORTANT! All tests must be completed before flying. Ensure the » NovaX 350 stands on a level surface.

28.1 Flight modes

> Toggle through all positions of the flight mode auxiliary switch (Ch 5). Verify that the colour of the front **(6)** and rear LED **(10)** match the colours given in the below table.

Mode	Front LED	Rear LED
Basic	Magenta – Solid	Blue – Solid*
Altitude	Green – Solid	Blue – Solid*
GPS	Blue – Solid*	Blue – Solid*

* When receiving excellent GPS signal. Refer to '30.4 GPS mode' on page 36.

28.2 Motors

Remove the propellers before you proceed!

Study chapter '27.5.1 Learning procedure' on page 30 for more information on channel assignment.

1. Remove the canopy.
2. Move your throttle stick to the bottom left corner and hold it there for 2 seconds to start the motors.
3. Increase throttle to 50 %.
4. Move the PCB and listen for pitch changes in the motors.
5. Apply stick inputs, listen for pitch changes and any anomalies in the sound of the motors.
6. Lightly tap the control board. The motors must shut off automatically.
7. Replace the canopy.
8. The test is completed.

29. INSTALLING THE PROPELLERS

29.1 Carbon fibre

Carbon fibre propellers are available as an accessory.

You must apply Loctite® (Blue) to the screw threads before inserting and tightening them.

Follow the installation diagram **[Fig. 14]**. Install a propeller on each motor. Match up "L" and "R" labels on propeller and boom ("L" with "L" and "R" with "R").

29.2 Plastic

Tighten the cap nut with moderate force! Overtightening will irreversibly damage the thread of the propeller mount axle. In this case you must immediately replace the propeller mount!

Follow the installation diagram **[Fig. 15]**. Install a propeller on each motor. Match up "L" (boom) and "8045" (propeller) and "R" and "8045R".

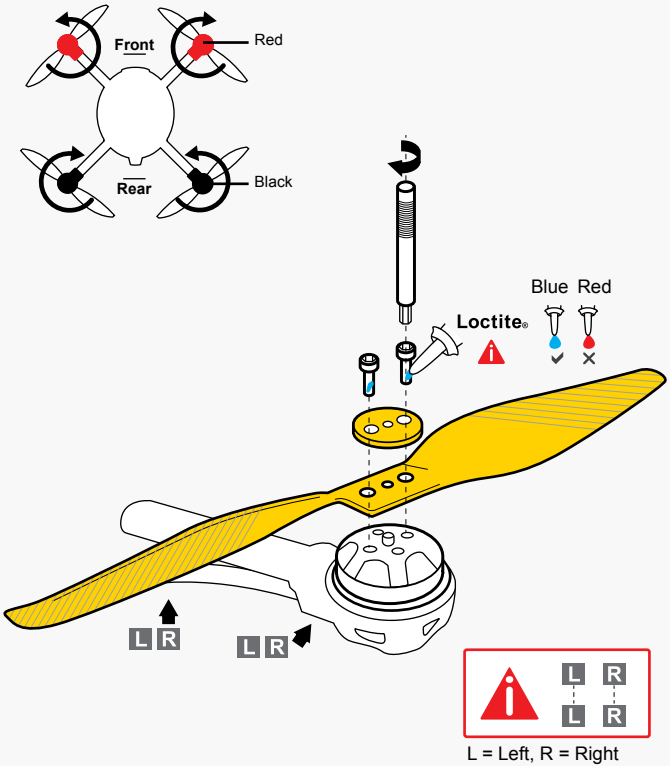
Front
Red
Rear
Black
Blue Red
Loctite®
L R
L R
L R
L R
L = Left, R = Right

Fig. 14

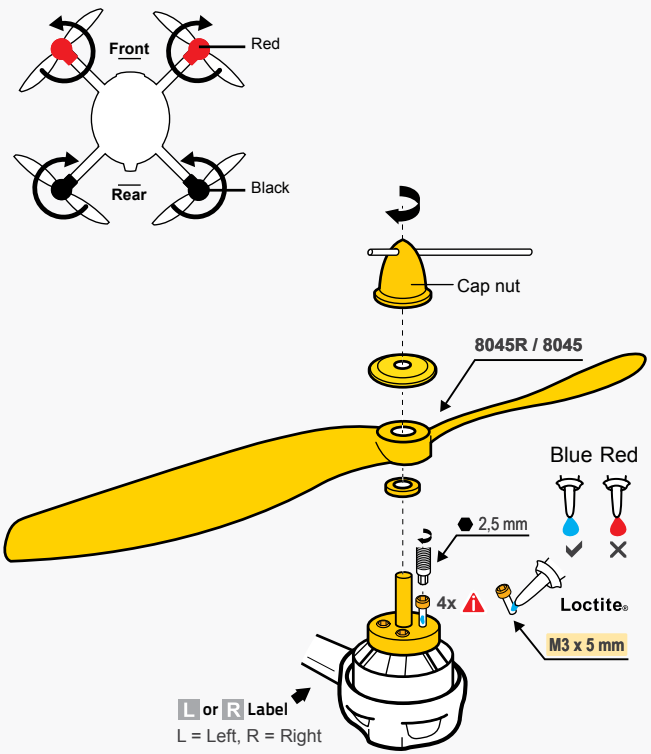
Front
Red
Rear
Black
Cap nut
8045R / 8045
Blue Red
2,5 mm
4x
Loctite®
M3 x 5 mm
L or R Label
L = Left, R = Right

Fig. 15

30. FLIGHT MODES

30.1 Overview

Mode	Front LED	Rear LED
Basic	Magenta – Solid	Blue – Solid
Altitude	Green – Solid	Blue – Solid*
GPS	Blue – Solid*	Blue – Solid*

* When receiving excellent GPS signal. Refer to '30.4 GPS mode' on page 36.

30.2 Basic mode

> The basic mode is designed specifically for users who are new to flying multirotor systems and those who look for intuitive controls for aerial photography.

> The controls respond less aggressively. This behaviour is intentional, allowing pilots to get a first feeling of how the »NovaX 350 responds to lever input.

> AUTO-LEVELLING is enabled. It means that if the pilot lets go of the aileron and elevator control stick, the »NovaX 350 regains a relative horizontal level position. Small drifts in any direction are normal, especially during not fully calm conditions.

> We recommend this mode when you intend to use a camera or FPV equipment. Motor power is restricted for smoother operation and less aggressive behaviour, which is beneficial to scenery capture.

30.3 Altitude mode

The altitude mode (mid-stick mode) holds the »NovaX 350 at a desired altitude. Use the mode as following:

1. Activate the Basic mode.
2. Lift the »NovaX 350 up to the desired altitude. Move the throttle towards its centre position.
3. Activate the Altitude mode on your transmitter.
4. The »NovaX 350 now hovers at and holds the set altitude without further adjustments. It is possible to use rudder, aileron and elevator.
5. Set a new altitude via throttle input. Move the throttle stick back to the centre position to hold the new altitude.
6. Change flight modes to deactivate the Altitude mode.

30.4 GPS mode

In the GPS mode the »NovaX 350 holds a set position (x, y, and z-axis). As opposed to the Altitude mode there is no need for you to control the x- and y-axis. The GPS function controls and makes adjustments to all three axes.

Use the mode as following:

1. Activate the BASIC mode.
2. Lift the »NovaX 350 up to the desired altitude and position it. Move the throttle towards its centre position.
3. Activate the GPS mode on your transmitter.
4. The »NovaX 350 now holds the position (and altitude).
5. Correct the position as desired.
6. Change flight modes to deactivate the GPS mode.

The GPS signal strength is indicated by the front and rear LED. Depending on the GPS signal strength the solid LED is interrupted by distinct blink patterns, which are summarized in **[Fig. 16]**.

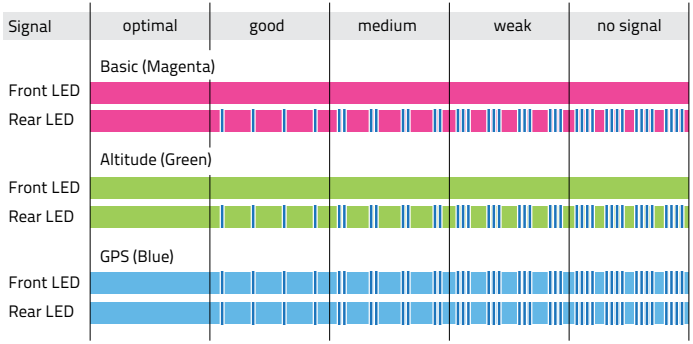

Fig. 16

30.5 R.T.H.

In order for R.T.H. to work, wait (1 - 10 min.) until the »NovaX 350 receives a good GPS signal before taking off.

R.T.H. (Return To Home) is a failsafe feature of S.M.A.R.T. (Software Managed Auto Return Technology) enabling the »NovaX 350 to fly back to the take-off position and is triggered automatically or manually. If triggered manually, the pilot can deactivate it again to take back control as soon as they see the situation under control.

For a quick introduction to R.T.H. we suggest you watch the following short clip(s):

Video: https://vimeo.com/128202760

30.5.1 Auto triggers

- Receiver loses signal (receiver failed)
- Operating outside the operating range (approx. 300 m)
- Turning the transmitter off

30.5.2 Manual trigger

- Deactivated: R.T.H switch in position 0 (or 1 respectively)
- Activated: R.T.H switch in position 1 (or 2 respectively)

30.5.3 Procedure

When triggered, returning to home follows a simple two-step procedure: the »NovaX 350 is automatically brought into a stable hover position, then returns home. Study **[Fig. 17]**.

30.5.4 The importance of the GPS signal

For R.T.H. to work, a good GPS signal is required at all times. The »NovaX 350 may take up to 10 min. for GPS signal acquisition the first time you turn it on. For subsequent signal acquisition the time may be shorter (1 to 2 min.).

Note that whenever you move the »NovaX 350 to another location, the signal acquisition time may increase again (1 to 10 min.). Depending on the GPS signal strength, the »NovaX 350 behaves differently. The below table summarizes all possible behaviours.

GPS signal	Behaviour on triggering of R.T.H.
Good signal at take-off and when R.T.H. is triggered	»NovaX 350 returns home.
Weak signal at take-off, but improved signal during flight	»NovaX 350 holds its position for 5 seconds, then descends and lands.
Signal weakens during flight	»NovaX 350 descends immediately.

30.5.4.1 Fixing the 'Home' location

Once the motors have been started and the »NovaX 350 is receiving a good GPS signal (solid blue LED) it registers and locks the motor start location as 'home'.

If you started the motors in another than your preferred 'home' location, turn the motors off and unplug and reconnect the flight battery, then register a new home location by turning the motors on again.

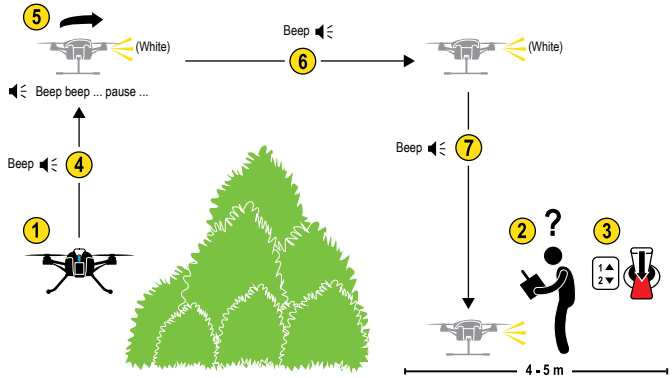

Fig. 17

Agility

For all three flight modes – Basic, Altitude and GPS – you can set two AGILITY LEVELS, and even mix your own according to your preferences. The agility level is set through channel 6 (Ch 6) on your transmitter. Study the following table:

Agility	Switch position	Description
AP	Pos. 1	Aerial photography mode Low agility. Preset for smooth aerial application.
Sport	Pos. 2	Sport mode Strong agility. Fast sport and fun flights. Does not permit flips.
Custom*	Pos. 3	Custom agility levels and I.R.P.C. settings; Set in EYECONTROL app; Replaces either AP or Sport agility;

* The user can set the agility according to their preferences, either with lower or higher agility. In the initial release version the custom agility levels lie between the endpoints of the AP and Sport agility levels. In future firmware releases the range may be increased for increased agility or even flipping. The custom agility level can be dragged and dropped within the EYECONTROL app onto either position 1 or 2 of the channel 6 (Ch 6) switch, replacing AP or Sport agility respectively.

30.6 I.R.P.C.

I.R.P.C (Intelligent Relative Positioning Control) controls the »NovaX 350 relative to the take-off position. For a quick introduction to I.R.P.C., we suggest you watch the following short clip(s):

Video: https://vimeo.com/128193344

30.6.1 Programming and activating I.R.P.C.

I.R.P.C. is activated by switching the bank selection switch to position 3 (custom mode), but must be set in the EYECONTROL app. Follow the instructions given in the app.

30.6.2 Principle explained

In traditional flying, knowing the relative position of the helicopter to the pilot (transmitter) is crucial as stick input (except for throttle) directly affects the course. That is, if the helicopter's nose faces the pilot and they apply aileron, elevator, or rudder, behaviour is essentially reversed. In case of loss of orientation the pilot may inadvertently crash the helicopter.

When active, I.R.P.C solves this problem by registering the »NovaX 350's take-off position on motor start. All stick input is translated relatively to the take-off position, regardless of the »NovaX 350's position in flight. In other words, if the pilot takes off with the »NovaX 350's nose facing away from them, stick input always will affect the course relative to the take-off position. **[Fig. 18]** illustrates this priciple based on a mode 2 transmitter.

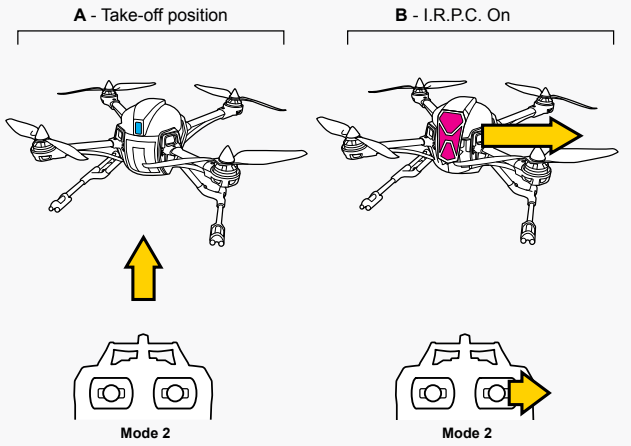

Fig. 18

[Fig. 18]:
[A] denotes the take-off position and **[B]** the behaviour when I.R.P.C. is on. In **[B]** the »NovaX 350 has been turned by 180° and moves to the right when aileron is applied, whereas in traditional flying it would move to the left. This is because all input is translated relatively to the take-off position (**[A]**).

30.7 Activated sensors

Sensor	Application	Flight mode		
		Basic	Altitude	GPS
GNSS sensor	GPS	–	–	✔
Barometer (atmospheric pressure sensor)	Altitude	–	✔	✔
Acceleration sensor	Levelling	✔	✔	✔
Gyro	Orientation	✔	✔	✔

31. FLYING THE NOVAX 350

31.1 Visual inspection

> Inspect the »NovaX 350 for damage before every flight. Replace damaged components before flying again. Only use original spare parts.

> Observe the condition of each motor:

  » Motor shaft

  » Propeller position and condition

> Always replace defective parts immediately.

> If you are unsure about your product's condition consult an experienced RC pilot or contact our customer support. Do not attempt any further flight until the »NovaX 350 is fit for flight.

31.2 Stick controls

Refer to chapter '23. Terms' on page 22 and also study **[Fig. 19]**.

31.3 Placement at start position

Place the »NovaX 350 on a level surface (e.g. stone floor). Take note of chapter '16. Safety features and accident prevention' on page 16.

31.4 Starting the motors

Function	Mode 1	Mode 2
Start motors	Move both sticks into the left bottom corners and hold them there for 2 seconds.	Move the throttle stick into the left bottom corner and hold it there for 2 seconds.
Stop motors	Move both sticks into the left bottom corners and hold them there for 2 seconds.	Move the throttle stick into the left bottom corner and hold it there for 2 seconds.

31.4.1 Directional checks

It is crucial to confirm the proper functioning of the transmitter before every flight.

> Check if AILERON and ELEVATOR behave as intended.

> Check if THROTTLE and RUDDER behave as intended.

31.4.2 Taking off

> Once the motors are running, increase throttle until the »NovaX 350 is at least 50 cm above the ground. At this height, you have passed the so-called ground effect and the »NovaX 350 is more stable in its flight position, thus can be controlled more easily.

> You have now managed the critical part and can familiarize yourself with the »NovaX 350 by gentle throttle motions.

During flight close above the ground and during take-off, turbulence and air flow can be experienced which may affect the »NovaX 350. Quicker response to the controlling motions and slight swerving of the »NovaX 350 forwards, backwards or to the side may result from this. This so-called ground effect is no longer present starting at an altitude of approx. 50 cm.

31.4.3 Landing

> To land the »NovaX 350, decrease the throttle slightly until it gravitates to the ground. A somewhat solid touchdown is no problem and should not be corrected with jerky throttle movements.

> Whenever possible, attempt to touch down vertically (“helicopter landing”). Avoid landing with high horizontal speeds (“airplane landing”) to prevent the legs from getting entangled, resulting in the »NovaX 350 tumbling.

> After landing, always turn off the motors. Disconnect the battery if you do not immediately fly the »NovaX 350 again.

31.4.4 Trimming

> Trimming allows you to equalize drifting. Drifting refers to movement out of position when in hover flight without aileron or elevator input.

> Refer to your transmitter’s operating instructions for more information.

31.4.5 Gradual learning

Be careful when applying RUDDER, which will rotate the »NovaX 350 around its vertical centre axis, causing you to become disoriented. Study carefully how AILERON and ELEVATOR behave after applying RUDDER.

> Practise taking off and landing a few times to get a feel for the »NovaX 350.

> Once you are reasonably sure, you can begin to the course with rudder, elevator and aileron. Always fly slowly and with extra care and practice before trying new flight manoeuvers.

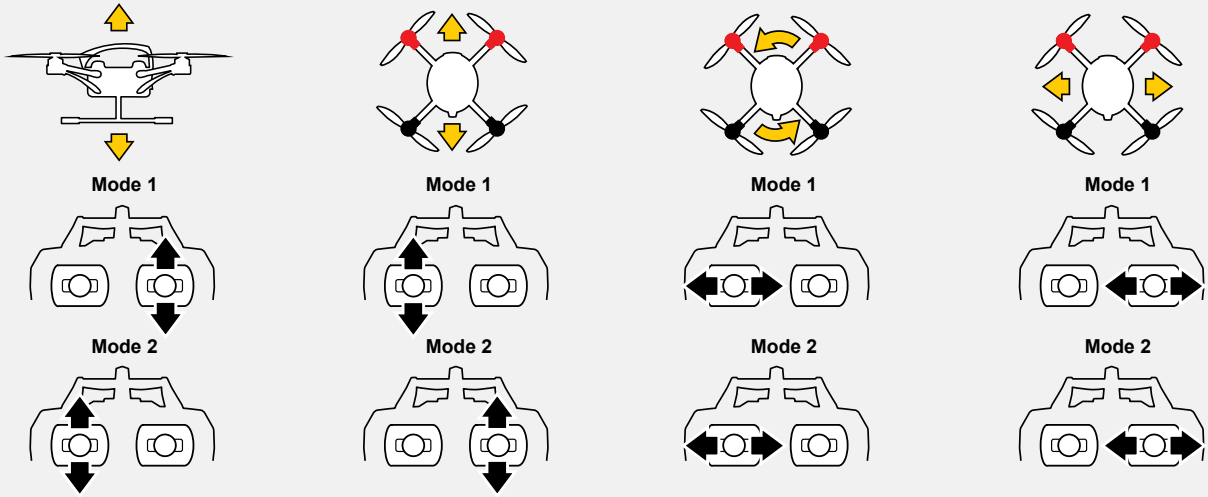

Fig. 19

> When you have familiarised yourself with the »NovaX 350's flight properties, you may perform additional exercises.
  - » Start with simple flight manoeuvers like flying a metre forwards/back (nod function), then
  - » Practise hovering to the left/right (aileron function). When you have the practice you need, start flying circles and figure eights.

32. USING A CAMERA

32.1 Introduction

You have the possibility to attach a camera to the »NovaX 350's carbon fibre platform located under the body. It is also possible to attach a gimbal to the »NovaX 350 for aerial photography purposes. Any camera used must be self-sufficient.

The platform is rubber-cushioned and thus assists in eliminating vibrations reaching the camera. The platform features various slots and drill holes for mounting cameras.

Make sure the camera is not taller than the available clearance between the camera platform and the ground.

32.2 Attaching the camera

32.2.1 Action mounts

There are suitable action mounts available from www.rclogger.com, which can be directly mounted onto the camera platform **(14)** and are compatible with some RC Logger action cameras.

32.2.2 Double-sided tape

> A convenient way to mount a camera is with double-sided tape. Ensure the tape's adhesive force can hold the weight of the camera, also during disturbances. You are advised to consult a professional assisting you in selecting the best suitable tape.

> Clean the carbon platform before attaching the tape. Fat, grease and dust decrease adhesive strength.

After sticking the tape to the platform, let it rest for 24 hours in order for it to reach its full adhesive strength.

32.2.3 Alternative mounting methods

Depending on your camera, the mounting may require some grade of improvising. Always make sure the weight is carefully balanced in all four directions and no part touches the propellers/rotors during operation.

32.3 Attaching a gimbal

32.3.1 Gimbal platform

There is an additional gimbal platform included in delivery you can make use of when mounting the gimbal. Swap the camera platform for the gimbal platform **[Fig. 20]**.

32.3.2 Connecting the gimbal

Consult the operating instructions of your gimbal for instructions relating to gimbal control.

The gimbal must be self-sufficient. That is to say, it must be supplied with power by a second battery or a camera.

There are two 3-pin header connectors, one for the X-AXIS and the other for the Y-AXIS, allowing you to control the gimbal via your transmitter.

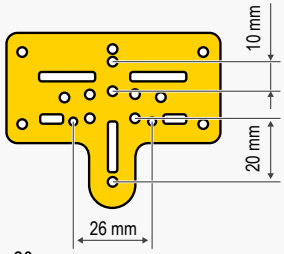

Fig. 20

Locate the connectors labelled **GIMBAL_X (PCB-2)** and **GIMBAL_Y (PCB-3)** on the front side of the power board and connect the gimbal wires. Carefully guide wires/cables.

33. MAINTENANCE, CARE AND REPAIR

> We provide video instructions for many spare parts. View them on www.rclogger.com. If instructions are available, follow them with precision.

33.1 Regular cleaning and maintenance

33.1.1 Cleaning

The »NovaX 350 is a simple but well-designed flying device. There are no mechanical parts that need to be lubricated or require special maintenance. However, after each flight you should clean the »NovaX 350 of possible dirt (wool strings, dust, etc.).

For cleaning, use a dry or slightly damp cloth and avoid contact between water and the electronics, rechargeable battery and motors.

33.1.2 Maintenance and repairs

Defective components present a hazard. Replace all damaged components before flying the »NovaX 350 again. It is important that you only use original spare parts. Non-original spare parts can lead to damage and accidents, or may not be of sufficient quality.

33.2 Drift

> Cold temperature environmental conditions may require sensitive electronic components to reach ideal operating temperature slower as compared to under favourable conditions such as room temperature.

> Under such cold conditions your unit may tend to drift in any direction, increasing gradually. Small drifts in any direction are normal, however. Drift may also be caused by propeller wash while flying close to ground surface. Ideally, avoid operating the unit in cold conditions (close to 32° F and 0 °C respectively) to prevent product damage.

If you need to continuously trim the »NovaX 350 to ensure proper flying then this may be due to one of the following reasons:

- A motor shaft might be slightly bent or a propeller is defective resulting in vibrations. Either replacing the motor(s) or installing a complete new set of propellers may solve this issue.
- Crashing the »NovaX 350, or exposing it to mechanical stress during transportation typically causes these phenomena.
- The onboard sensor has lost its factory calibration. Typically, this is caused by a hard hit (crashes), or exposure to high temperature. It can also be related to transport issues.

33.3 After a crash

> **It is strongly suggested to always inspect for damage. Replace defective parts immediately. Defective parts can impact properly working parts!**

> **Immediately disconnect the flight battery after a crash.**

33.3.1 Visual inspection

- An easy way to maintain the »NovaX 350 perfect condition is through visual inspection after every crash.

> During a crash motor mounts **(4) (12)** and motor arms **(2)** sometimes roll. This will cause the propeller to be out of alignment with the rest, and can cause problems. In this case check that all screws are securely tightened. Adjust and realign if necessary. Replace parts with worn out or stripped screw holes immediately.

> You can easily visually check if a propeller's tracking is out of alignment. Hover the »NovaX 350 around 2 meters away from yourself at eye-level. If one of the propellers appears to be visible "twice" (two lines), the tracking must be corrected immediately!

33.3.2 Propellers

> If a propeller is damaged in a crash or other action, replace it immediately.

> This also applies if there are fine tears or grazing in the propeller. Due to the high speed, parts could become loose if the propellers are damaged and result in product or property damage or personal injury.

> Replace damaged propellers according to chapter '29. Installing the propellers' on page 34.

34. DISPOSAL

34.1 General

In order to preserve, protect and improve the quality of environment, protect human health and utilise natural resources prudently and rationally, the user should return unserviceable product to relevant facilities in accordance with statutory regulations. The crossed-out wheeled bin indicates the product needs to be disposed separately and not as municipal waste.

34.2 Batteries

The user is legally obliged **(battery regulation)** to return used batteries and rechargeable batteries. **Disposing used batteries in the household waste is prohibited!** Batteries/ rechargeable batteries containing hazardous substances are marked with the crossed-out wheeled bin. The symbol indicates that the product is forbidden to be disposed via the domestic refuse. The chemical symbols for the respective hazardous substances are **Cd** = Cadmium, **Hg** = Mercury, **Pb** = Lead.

You can return used batteries/ rechargeable batteries free of charge to any collecting point of your local authority, our stores or where batteries/ rechargeable batteries are sold.
Consequently you comply with your legal obligations and contribute to environmental protection!

35. TECHNICAL DATA

Power supply	11.1 V LiPo 3-cell rechargeable battery
Operating temperature	+32 to 104 °F (0 to +40 °C)
Operating humidity	max. 75 % RH, non-condensing
Operating environment	outdoors only (dry weather conditions)
Wind conditions	no wind, light to mild wind
Diameter without propellers	13.78 inches (350 mm)
Propeller diameter	8 inches (203 mm)
Height	6.65 inches (169 mm), Standard legs 9.44 inches (240 mm), Long legs
Flight time	20-25 mins for 5200 mAh battery without payload (times may vary depending on style and environmental conditions)
Weight	28.5 oz (808 g) (with standard legs) 28.8 oz (816 g) (with long legs)
Payload	approx. 53 oz (1500 g) (excluding »NovaX 350, flight battery and all accessories)
Take-off weight	max. 52.9 oz (1500 g)

36. FCC COMPLIANCE STATEMENT

FCC ID: 2AARVRCE-NOVAX350

Caution: To maintain compliance with the FCC's RF exposure guidelines, place the device at least 20 cm from nearby persons.

36.1 Statement according to FCC part 15.19

This device complies with Part 15 of the FCC Rules. Operation is subject to the following two conditions:

- (1) This device may not cause harmful interference, and
- (2) This device must accept any interference received, including interference that may cause undesired operation.

36.2 Statement according to FCC part 15.21

Warning: Changes or modifications to this unit not expressly approved by the party responsible for compliance could void the user's authority to operate the equipment.

Note: This equipment has been tested and found to comply with the limits for a Class B digital device, pursuant to Part 15 of the FCC Rules. These limits are designed to provide reasonable protection against harmful interference in a residential installation. This equipment generates, uses and can radiate radio frequency energy and, if not installed and used in accordance with the instructions, may cause harmful interference to radio communications.

However, there is no guarantee that interference will not occur in a particular installation. If this equipment does cause harmful interference to radio or television reception, which can be determinded by turning the equipment off and on, the user is encouraged to try to correct the interference by one or more of the following measures:

- Reorient or relocate the receiving antenna.
- Increase the separation between the equipment and receiver.
- Connect the equipment into an outlet on a circuit different from that to which the receiver is connected.
- Consult the dealer or an experienced radio/TV technician for help.

37. STATUS INDICATION TABLE

Type	Status	Trigger	Front LED
Flight Mode	Basic (ACC assisted)	Channel 5 : (+100)	● Magenta – Solid
	Altitude (Midstick height hold)	Channel 5 : (0)	● Green – Solid
	GPS (position hold)	GPS fixed - No signal	● Blue – Blinks (fast)
		GPS fixed - Poor signal	● Blue – Solid
		Channel 5 : (-100), strong GPS signal	● Blue – Solid
	Flight agility (Bank selection switch)	Channel 6	No indication
	R.T.H. Return-to-Home	Channel 5 triggered via switch or Transmitter (Tx) off	○ White – Blinks continuously (0.5 Hz)
Flight Error	Low battery level 1	Battery <11.4 V	○ White – Blinks continuously (1 Hz)
	Low battery level 2	Battery <10.5 V	○ White – Blinks continuously (5 Hz)
	Fail safe (PPM failed)	Loss of RF signal	○ White – Blinks continuously (0.5 Hz)
Flight Check Error	GPS / compass failed	Start up main board self test	● Red – Blinks continuously (1 Hz)
	Pressure sensor failed		
	Gyro failed		
	Power system failed (ESC/motor)		
	Permanent system check	System error (pilot must land!)	● Red – Blinks (fast)
Calibration	Tx	App or button on flight controller	● Red – Solid/ ● Blue – Solid (small LED)
	Gyro	App or button on flight controller	● Green – Solid/ ● Blue – Solid (small LED)
	Compass	App or button on flight controller	● Magenta – Solid/ ● Blue – Solid (small LED)
	Tx	Calibration in progress	● Red – Solid/ ● Blue – Blinks (small LED)
	Gyro	Calibration in progress	● Green – Solid/ ● Blue – Blinks (small LED)
	Compass	Calibration in progress	● Magenta – Solid/ ● Blue – Blinks (small LED)
Factory state	Gyro or compass calibration procedure	Invalid gyro or compass calibration	● Cyan – Blinks 1Hz (alternating to rear)

Rear LED	Buzzer
Refer to chapter "GPS"	None
Refer to chapter "GPS"	None
Refer to chapter "GPS"	None
Refer to chapter "GPS"	None
Refer to chapter "GPS"	None
No indication	None
○ White – Blinks continuously (0.5 Hz)	Beep beep ... pause 1.5 sec. ... beep beep ... ; Long beep at every step of the process.
○ White – Blinks continuously (1 Hz)	Continuous single beeps (1 Hz)
○ White – Blinks continuously (5 Hz)	Continuous single beeps (2 Hz)
○ White – Blinks continuously (0.5 Hz)	Beep at each stage of process
● Red – Blinks continuously (1 Hz)	None
● Red – Blinks (fast)	Continuous beeps (5 Hz)
● Red – Solid	None
● Green – Solid	None
● Magenta – Solid	None
● Red – Solid	Beep at each stage of the process
● Green – Solid	Beep at each stage of process
● Magenta – Solid	Beep at each stage of process
● Cyan – Blinks 1Hz (alternating to rear)	None

38. DECLARATION OF CONFORMITY

Manufacturer: CEI Conrad Electronic International (HK) Limited

License holder: CEI Conrad Electronic International (HK) Limited

Address: 18th Floor, Tower 2,
Nina Tower, No. 8 Yeung Uk Road,
Tsuen Wan, New Territories, Hong Kong

We declare on our own responsibility, that the product:

Product description: RC EYE NovaX 350

Model: 88012RC

is in conformity with following directives and standards or regulations:

ETSI EN 300 328 V1.8.1 (2012-06)

ETSI EN 301 489-17 V2.2.1 (2012-09)

R&TTE (1999/5/EC)

CE marking on product:

CE

Christian Listl

CEI Conrad Electronic International (HK) Limited
18th Floor, Tower 2, Nina Tower, No. 8 Yeung Uk Road,
Tsuen Wan, New Territories, Hong Kong

Hongkong, **8 Jun 2015**

Place and date of issue

Manufacturer/Authorized representative name and signature

39. PRODUCT SUPPORT

Visit http://www.rclogger.com/support or call +852 2559 2662 for product support. Additionally, visit our Online Ticket System at http://support.rclogger.com for any RC Logger inquiry.

40. LEGAL NOTES

These operating instructions are published by CEI Conrad Electronic International (HK) Limited, 18th Floor, Tower 2, Nina Tower, No. 8 Yeung Uk Road, Tsuen Wan, New Territories, Hong Kong.

All rights including translation reserved. Reproduction by any method, e.g. photocopy, microfilming, or the capture in electronic data processing systems require the prior written approval by the editor. Reprinting, also in part, is prohibited. The operating instructions reflect the current technical specifications at time of print.

© 2015 by CEI Conrad Electronic International (HK) Limited

88012RC_88014RC_v1_0815_02_m_en_(10)_M1

RC Logger®

www.rclogger.com