TEST REPORT

Report No.:	**E201604066248-1**	**Application No.:**	**E201604066248**
Client:	VALEO INTERIOR CONTROLS (SHENZHEN) CO.,LTD		
Address:	North Junyi Ind. Park, Huaide Vil., Fuyong Town, Baoan Dist., Shenzhen 51810, China		
Sample Description:	Power smart		
Model:	PS2M-C1		
Adding Model:	PS2A-C1		
FCC ID	2AAS2-PS2MC1		
Test Specification:	FCC PART 15:2015		
Test Date:	2016-04-08 to 2016-05-04		
Issue Date:	2016-05-05		
Test Result:	*Pass.*		

Prepared By:	**Reviewed By:**	**Approved By:**
Bruce Li / Test Engineer	Lynn Xiao /Technical Manager	Yong Dai /Manager
Date:2016-05-05	Date:2016-05-05	Date:2016-05-05

Other Aspects:

None

Abbreviations: *ok / P = passed; fail / F = failed; n.a. / N = not applicable*

The test result in this test report refers exclusively to the presented test sample. This report shall not be reproduced except in full, without the written approval of GRGT.

DIRECTIONS OF TEST

1. This station carries out test task according to the national regulation of verifications which can be traced to National Primary Standards and BIPM.

2. The test report merely corresponds to the test sample. It is not permitted to copy extracts of these test result without the written permission of the test laboratory.

3. If there is any objection concerning the test, the client should inform the laboratory within 15 days from the date of receiving the test report.

Table of Contents

1. TEST RESULT SUMMARY **4**

2. GENERAL DESCRIPTION OF TUT **5**

2.1 APPLICANT 5
2.2 MANUFACTURER 5
2.3 BASIC DESCRIPTION OF EQUIPMENT UNDER TEST 5
2.4 TEST OPERATION MODES 5
2.5LOCAL SUPPORTIVE INSTRUMENTS 6

3. LABORATORY AND ACCREDITATIONS **7**

3.1 LABORATORY 7
3.2 ACCREDITATIONS 7
3.3 MEASUREMENT UNCERTAINTY 7
3.4 LIST OF USED TEST EQUIPMENT AT GRGT 8

4. TEST RESULTS **9**

4.1 E.U.T. TEST CONDITIONS 9
4.2 ANTENNA REQUIREMENT 10
4.3 RADIATED ELECTROMAGNETIC DISTURBANCE MEASUREMENT 11
4.3.1 LIMITS *11*
4.3.2 TEST PROCEDURE *11*
4.3.3 TEST SETUP *12*
4.3.4 TEST RESULTS *13*
4.4 CONDUCTED EMISSION MEASUREMENT 16
4.4.1 LIMITS *16*
4.4.2 TEST PROCEDURES *16*
4.4.3 TEST SETUP *17*
4.4.4 TEST RESULTS *18*
4.5 RADIATED EMISSIONS WHICH FALL IN THE RESTRICTED BANDS 20
4.5.1 LIMITS *20*
4.5.2 TEST PROCEDURES *20*
4.5.3 TEST SETUP *21*
4.5.4 TEST RESULTS *21*
4.6 OCCUPIED BANDWIDTH 22
4.6.1 LIMITS *22*
4.6.2 TEST PROCEDURES *22*
4.6.3 TEST SETUP *22*
4.6.4 TEST RESULTS *23*

APPENDIX A: PHOTOGRAPH OF THE TEST ARRANGEMENT **24**

APPENDIX B: PHOTOGRAPH OF THE EUT **25**

1. TEST RESULT SUMMARY

FCC PART 15:2015			
Standard	**Item**	**Limit / Severity**	**Result**
FCC PART 15:2015	Radiated Emission (9kHz~30MHz)	15.209(a)	PASS
	Conducted Emission (150kHz~30MHz)	15.207(a)	PASS
	Restricted bands of operation	15.205(a)	PASS
	Occupied Bandwidth	15.215(c)	PASS

2. GENERAL DESCRIPTION OF TUT

2.1 APPLICANT

Name:	VALEO INTERIOR CONTROLS (SHENZHEN) CO.,LTD
Address:	North Junyi Ind. Park, Huaide Vil., Fuyong Town, Baoan Dist., Shenzhen 51810, China

2.2 MANUFACTURER

Name:	VALEO INTERIOR CONTROLS (SHENZHEN) CO.,LTD
Address:	North Junyi Ind. Park, Huaide Vil., Fuyong Town, Baoan Dist., Shenzhen 51810, China

2.3 BASIC DESCRIPTION OF EQUIPMENT UNDER TEST

Equipment:	Power smart
Model:	PS2M-C1
Adding Model:	PS2A-C1
Trade Name:	Chery Cowin
Power supply:	DC 12V
Operation Frequency:	125KHz
Sample submitting way:	■Provided by customer □Sampling
Antenna Type	dedicated antenna
Note:	The model PS2A-C1 have the same technical construction including circuit diagram, PCB Layout and component layout, all electrical construction and mechanical construction, with PS2M-C1. The difference lies only in ESCL Interface Circuit Part of the different models. PS2A-C1:3 ports without the ESCL interface circuit.PS2M-C1:4 ports with the ESCL interface circuit and connector. Because PS2M-C1 is the more complex model with the full functions, so selected to be tested.

2.4 TEST OPERATION MODES

Test mode: TX mode: EUT continue transmitting in 125kHz.

2.5LOCAL SUPPORTIVE INSTRUMENTS

Name of Equipment	Manufacturer	Model	Serial Number
	Lenovo	T540p	R9-0B38DG
Load box	Valeo	M16/T21	/
Smart Key	Valeo	T15MT	/
ESCL	Valeo	NL-3	/
USB MUX DIAGII	Valeo	GEEES-TCN004	6670
Powersmart harnesses	Valeo	/	/
Backup Antenna	Valeo	A09SA	000047787
LF antenna	Valeo	J33	000049358
PSU antenna	Valeo	PBT-GF30	000044339

Note :The notebook is just used to produce fixed frequency transmitting.

3. LABORATORY AND ACCREDITATIONS

3.1 LABORATORY

The tests and measurements refer to this report were performed by EMC Laboratory of Guangzhou GRG Metrology and Test CO., LTD.

Add. : 163 Pingyun Rd, West of Huangpu Ave, Guangzhou, 510656, P. R. China
Telephone: +86-20-38699959, 38699960, 38699961
Fax : +86-20-38695185

3.2 ACCREDITATIONS

Our laboratories are accredited and approved by the following approval agencies.

USA	FCC Listed Lab (No. 688188)
Canada	Registration No.:8355A-1

3.3 MEASUREMENT UNCERTAINTY

Where relevant, the following measurement uncertainty levels have been estimated for tests performed on the EUT as specified in CISPR 16-4-2:

Measurement		Frequency	Uncertainty
Radiated Emission	Horizontal	30MHz～1000MHz	4.2dB
		1GHz～12.75GHz	4.2dB
	Vertical	9kHz～30MHz	3.0dB
		30MHz～1000MHz	4.4dB
		1GHz～12.75GHz	4.4dB

This uncertainty represents an expanded uncertainty expressed at approximately the 95% confidence level using a coverage factor of k=2.

3.4 LIST OF USED TEST EQUIPMENT AT GRGT

Name of Equipment	Manufacturer	Model	Serial Number	Calibration Due
Radiated Emission/Occupied Bandwidth				
Receiver	R&S	ESU26	100526	2017-02-16
Loop antenna	R&S	HFH2-Z2	881058/28	2017-03-10
Semi-anechoic chamber	ETS	966(RFD-F/A-100)	3730	2016-12-31
Conducted Emission				
EMI Receiver	R&S	ESCI	100529	2017-02-15
L.I.S.N	SCHWARZBECK	NSLK 8127	8127450	2016-07-20

4. TEST RESULTS

4.1 E.U.T. TEST CONDITIONS

Type of antenna:	dedicated antenna
Temperature:	23.2 °C
Humidity:	57 % RH
Atmospheric Pressure:	1011 mbar
Test frequencies:	According to the 15.31(m) Measurements on intentional radiators or receivers, other than TV broadcast receivers, shall be performed and. if required. reported for each band in which the device can be operated with the device operating at the number of frequencies in each band specified in the following table:

Frequency range over which device operates	Number of frequencies	Location in the range of operation
1 MHz or less	1	Middle
1 to 10 MHz	2	1 near top and 1 near bottom
More than 10 MHz	3	1 near top. 1 near middle and 1 near bottom

4.2 ANTENNA REQUIREMENT

The EUT can work with three antennas.They are dedicated antennas. Back up antenna gain is 0.5dBi,LFantennagainis1.5dBi,PSUantennagainis1.5dBi.Theseantennasaredispatchedi n the vehicle body.Please check the document of Operation Decription.which accordance 15.203 is considered sufficient to comply with the provisions of this section

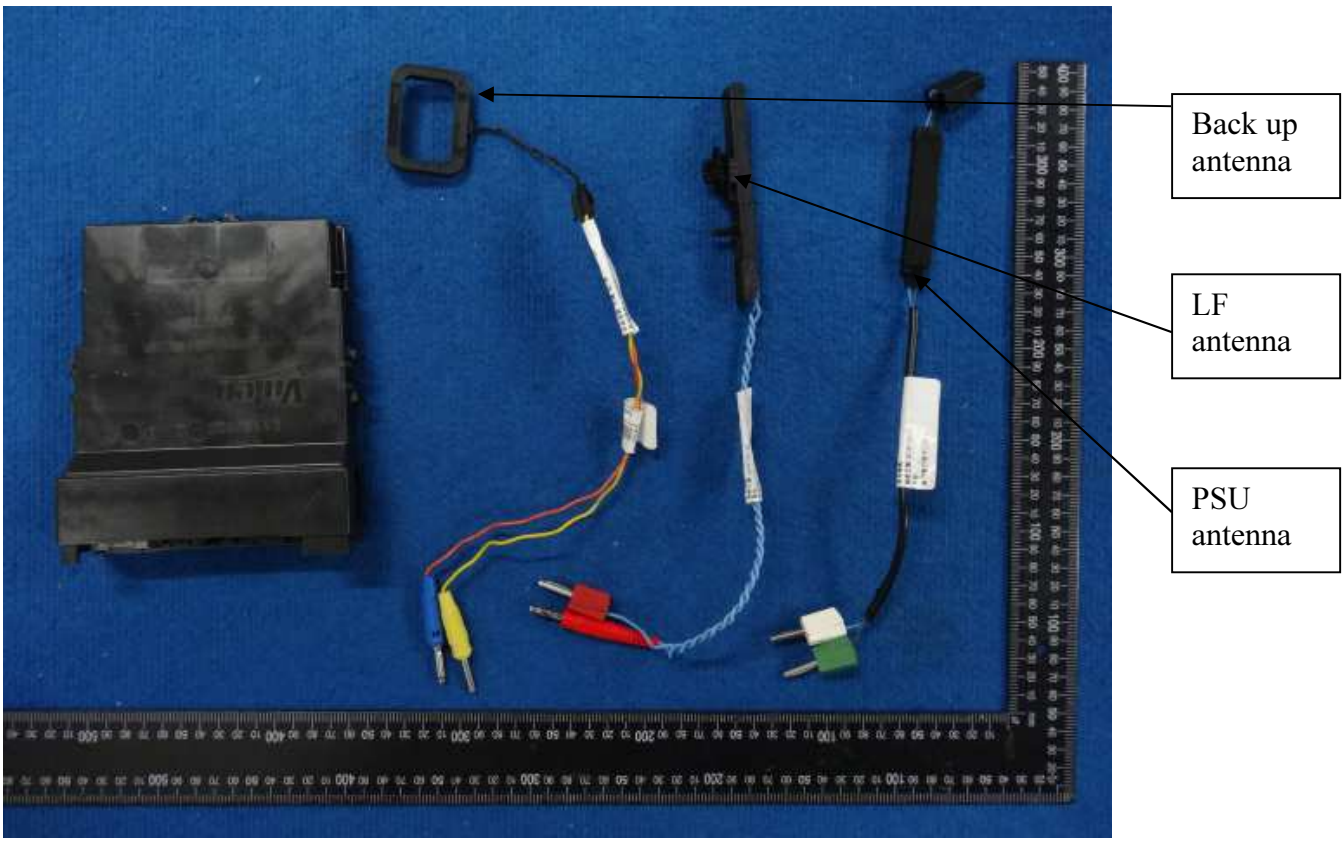

4.3 RADIATED ELECTROMAGNETIC DISTURBANCE MEASUREMENT

4.3.1 LIMITS

Because the device is working in frequency 125 kHz, so we test radiated emission between 9 kHz~30MHz.

Frequency (MHz)	Field strength (microvolts/meter)	Measurement distance (meters)	Field strength (dBμV/m)(distance 3m)
0.009-0.490	2400/F(kHz)	300	128.52~93.8
0.490-1.705	24000/F(kHz)	30	73.8~63
1.705-30.0	30	30	69.5

NOTE: (1) The emission limits shown in the above table are based on measurements employing a CISPR quasi-peak detector except for the frequency bands 9–90 kHz, 110–490 kHz and above 1000 MHz. Radiated emission limits in these three bands are based on measurements employing an average detector.

(2)Pending the development of an appropriate measurement procedure for measurements performed below 30 MHz, when performing measurements at a closer distance than specified, the results shall be extrapolated to the specified distance by either making measurements at a minimum of two distances on at least one radial to determine the proper extrapolation factor or by using the square of an inverse linear distance extrapolation factor (40 dB/decade).

4.3.2 TEST PROCEDURE

The EUT was placed on a table, which is 0.8meter above ground. Measurements are performed at distance 3.0m with a 0.6m loop antenna as described in 4.3.2 of ANSI C63.10.

Below 1GHz:

The bandwidth setting on the test receiver is 200Hz for 9 kHz~150 kHz and 9 kHz from 150 kHz~30MHz. the EUT is tested in a semi-anechoic chamber.

The FCC part 15 regulations and ANSI C63.10 test method must be used to find the maximum emission during Radiated Emission test.

Pre-test the EUT aligning the measurement antenna along the site axis, orthogonal to the axis, and then with the measurement antenna horizontal, found the measurement antenna orthogonal to the axis the worst case.

The worst case emissions were reported.

4.3.3 TEST SETUP

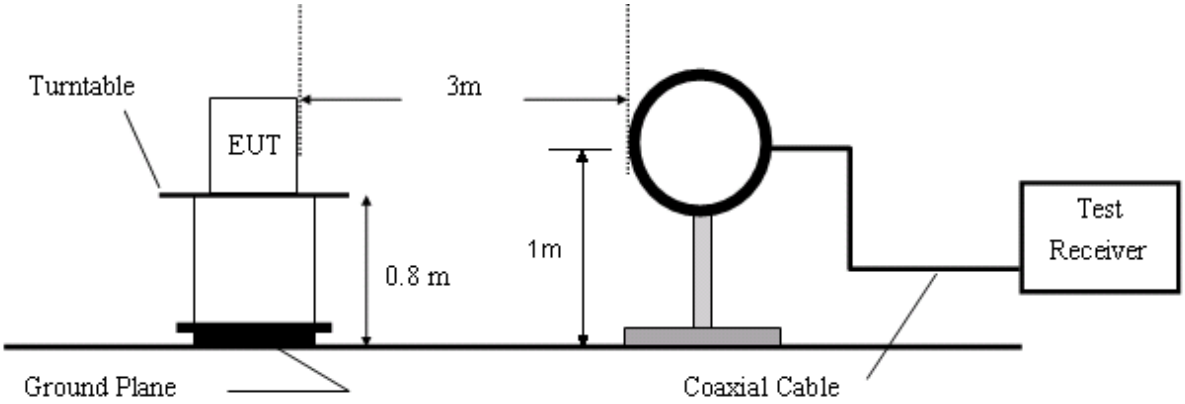

4.3.4 TEST RESULTS

Project No.:	**E201604066248**	**Polarziation:**	**Vertical**
Standard:	**(RE)FCC PART 15.209**	**Power Source:**	**DC 12V**
Test item:	**Radiation Test**	**Date:**	**2016-4-21**
Temp./Hum.(%RH):	**20.5/52%RH**	**Time:**	**11:57:29**
EUT:	**Power smart**	**Distance:**	**3m**
Model:	**PS2M-C1**	**Test Result:**	**Pass**
Note:	**Backup antenna**		

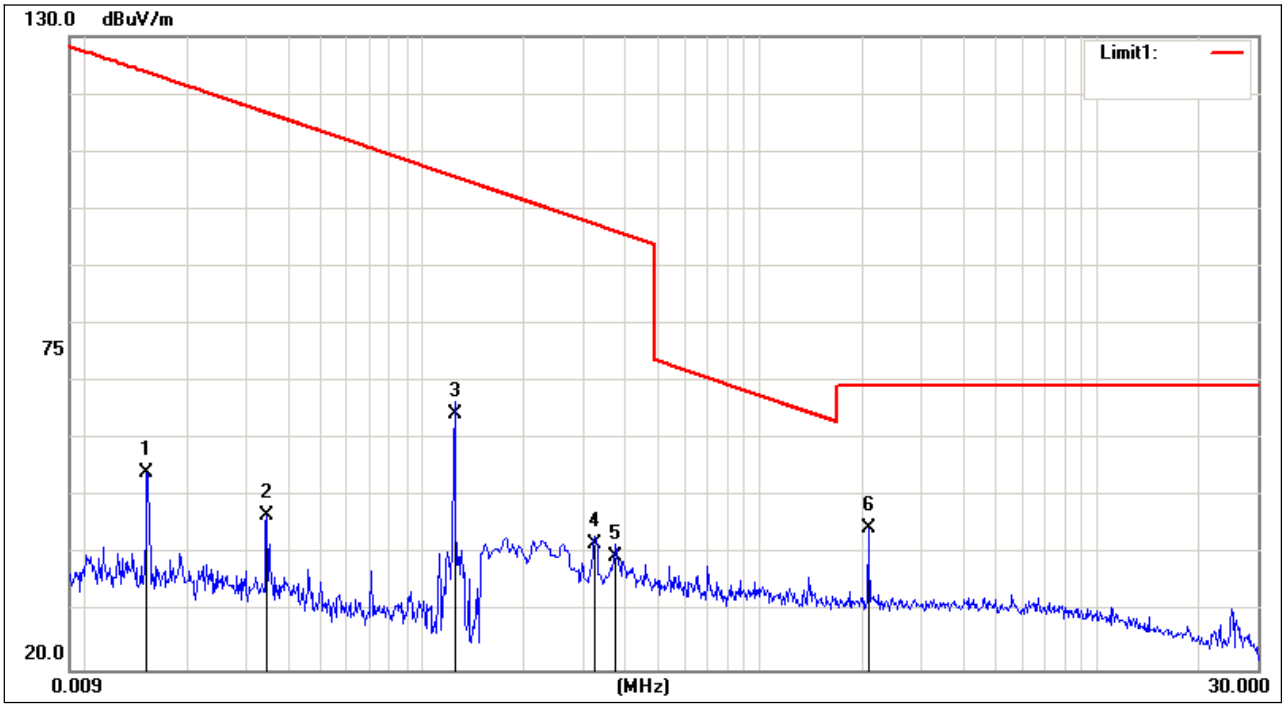

No.	Frequency (MHz)	Reading (dBuV/m)	Correct Factor(dB/m)	Result (dBuV/m)	Limit (dBuV/m)	Margin (dB)	Remark
1	0.0152	-2.13	56.29	54.16	123.80	-69.64	AVG
2	0.0346	-8.38	55.22	46.84	116.69	-69.85	AVG
3	0.1246	9.47	54.83	64.30	105.63	-41.33	AVG
4	0.3246	-12.97	54.87	41.90	97.36	-55.46	AVG
5	0.3726	-15.17	54.88	39.71	96.16	-56.45	AVG
6	2.0970	-10.59	55.09	44.50	69.50	-25.00	QP

Project No.:	**E201604066248**	**Polarziation:**	**Vertical**
Standard:	**(RE)FCC PART 15.209**	**Power Source:**	**DC 12V**
Test item:	**Radiation Test**	**Date:**	**2016-4-26**
Temp./Hum.(%RH):	**21.3/54%RH**	**Time:**	**18:08:13**
EUT:	**Power smart**	**Distance:**	**3m**
Model:	**PS2M-C1**	**Test Result:**	**Pass**
Note:	**LF antenna**		

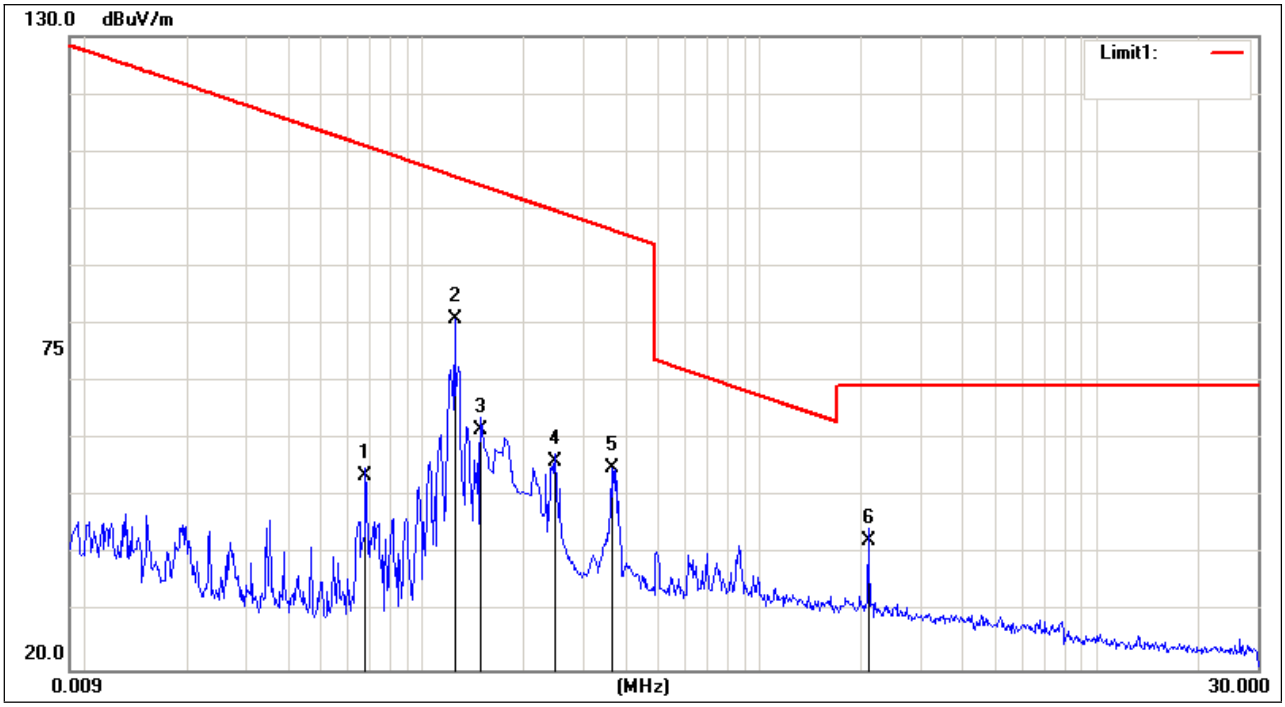

No.	Frequency (MHz)	Reading (dBuV/m)	Correct Factor(dB/m)	Result (dBuV/m)	Limit (dBuV/m)	Margin (dB)	Remark
1	0.0678	-1.26	54.86	53.60	110.93	-57.33	AVG
2	0.1248	26.12	54.83	80.95	105.65	-24.70	AVG
3	0.1490	6.87	54.83	61.70	104.11	-42.41	AVG
4	0.2464	1.25	54.85	56.10	99.75	-43.65	AVG
5	0.3636	0.23	54.88	55.11	96.38	-41.27	AVG
6	2.0970	-12.79	55.09	42.30	69.50	-27.20	QP

Project No.:	**E201604066248**	**Polarziation:**	**Vertical**
Standard:	**(RE)FCC PART 15.209**	**Power Source:**	**DC 12V**
Test item:	**Radiation Test**	**Date:**	**2016-4-26**
Temp./Hum.(%RH):	**21.3/54%RH**	**Time:**	**11:39:46**
EUT:	**Power smart**	**Distance:**	**3m**
Model:	**PS2M-C1**	**Test Result:**	**Pass**
Note:PSUantenna			

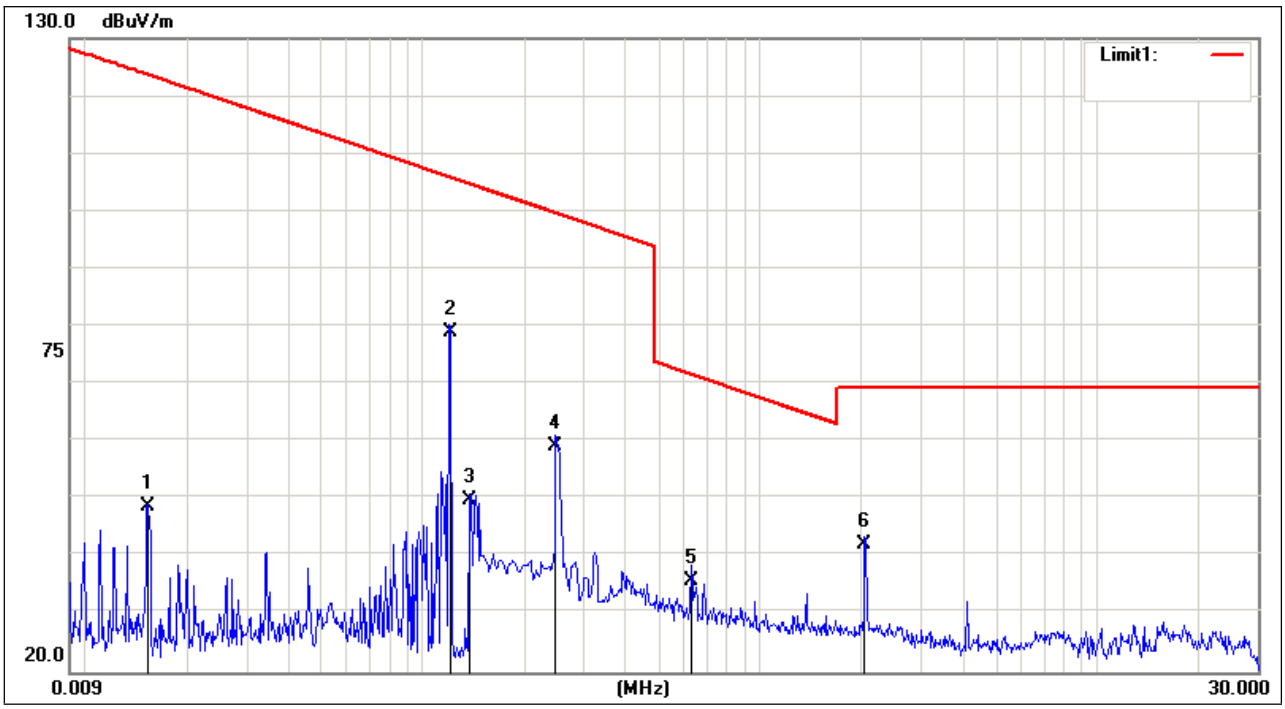

No.	Frequency (MHz)	Reading (dBuV/m)	Correct Factor(dB/m)	Result (dBuV/m)	Limit (dBuV/m)	Margin (dB)	Remark
1	0.0154	-7.65	56.28	48.63	123.69	-75.06	AVG
2	0.1210	24.28	54.82	79.10	105.88	-26.78	AVG
3	0.1382	-4.99	54.83	49.84	104.73	-54.89	AVG
4	0.2500	4.25	54.85	59.10	99.61	-40.51	AVG
5	0.6300	-19.05	54.95	35.90	71.62	-35.72	QP
6	2.0620	-12.89	55.09	42.20	69.50	-27.30	QP

4.4 CONDUCTED EMISSION MEASUREMENT

4.4.1 LIMITS

Frequency range	Limits (dBμV)	
	Quasi-peak	Average
150kHz ～ 0.5MHz	66～56	56～46
0.5 MHz ～ 5 MHz	56	46
5 MHz ～ 30 MHz	60	50

NOTE: (1) The lower limit shall apply at the transition frequencies.
(2) The limit decreases in line with the logarithm of the frequency in the range of 150kHz to 0.5MHz.

4.4.2 TEST PROCEDURES

For measurement of the disturbance voltage the equipment under test (EUT) is connected to the power supply mains and any other extended network via one or more artificial network(s). An EUT, whether intended to be grounded or not, and which is to be used on a table is configured as follows:

– Either the bottom or the rear of the EUT shall be at a controlled distance of 40 cm from a reference ground plane. This ground plane is normally the wall or floor of a shielded room. It may also be a grounded metal plane of at least 2 m by 2 m. This is physically accomplished as follows:

1) Place the EUT on a table of non-conducting material which is at least 80 cm high.
2) All other conductive surfaces of the EUT shall be at least 80 cm from the reference ground plane;
3) Interconnecting cables that hang closer than 40 cm to the ground plane shall be folded back and forth forming a bundle 30 cm to 40 cm long, hanging approximately in the middle between the ground plane and the table.
4) I/O cables that are connected to a peripheral shall be bundled in the centre. The end of the cable may be terminated if required using correct terminating impedance. The total length shall not exceed 1 m.

EUT and support equipment were set up on the test bench as per the configuration with highest emission level in the preliminary test. A scan was taken on both power lines, recording at least the six highest emissions. Emission frequency and amplitude were recorded into a computer in which correction factors were used to calculate the emission level and compare reading to the applicable limit. The test data of the worst-case condition(s) was recorded.

Pre-test the three antennas,found the LF antenna is the worst case,only the worst case data is reported.

4.4.3 TEST SETUP

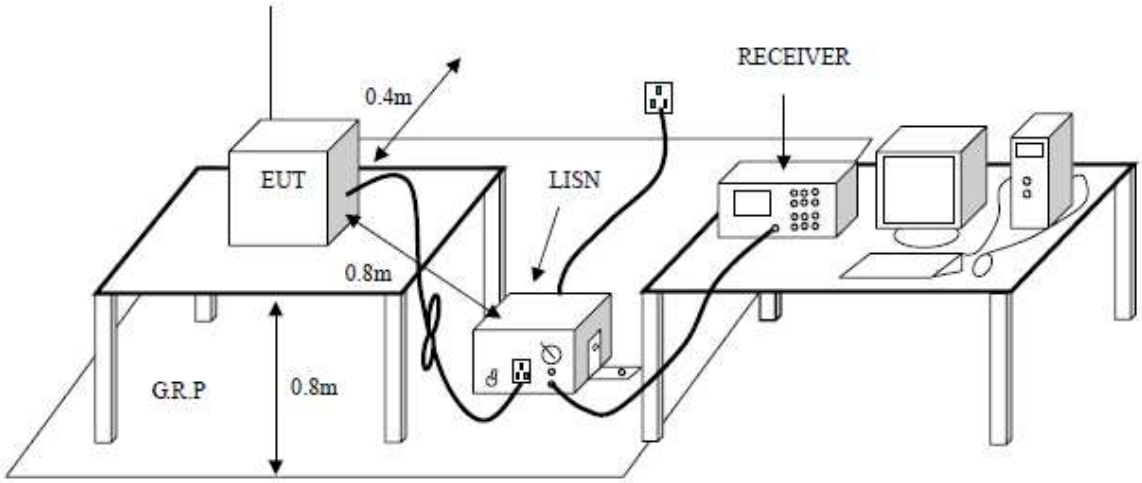

4.4.4 TEST RESULTS

Project No.:	**E201604066248**	**Probe:**	+
Standard:	**(CE)FCC PART 15.207**	**Power Source:**	**DC 12V**
Test item:	**Conduction Test**	**Date:**	**2016-4-25**
Temp./Hum.(%RH):	**20.5/52%RH**	**Time:**	**9:19:19**
EUT:	**Power smart**		
Model:	**PS2M-C1**	**Test Result:**	**Pass**
Note:			

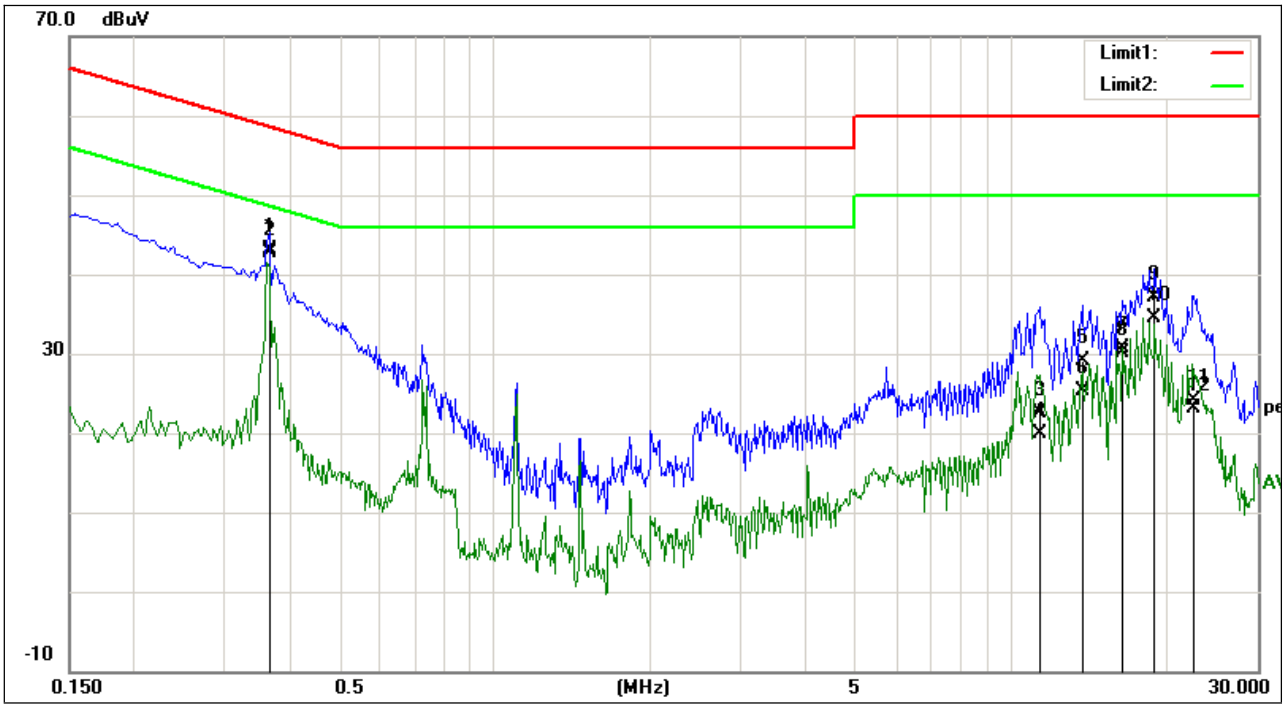

No.	Frequency (MHz)	Reading (dBuV)	Correct Factor(dB)	Result (dBuV)	Limit (dBuV)	Margin (dB)	Remark
1	0.3660	42.59	0.51	43.10	58.59	-15.49	QP
2	0.3660	42.29	0.51	42.80	48.59	-5.79	AVG
3	11.3260	21.77	0.73	22.50	60.00	-37.50	QP
4	11.3260	19.27	0.73	20.00	50.00	-30.00	AVG
5	13.7300	28.36	0.84	29.20	60.00	-30.80	QP
6	13.7300	24.46	0.84	25.30	50.00	-24.70	AVG
7	16.4780	29.99	0.81	30.80	60.00	-29.20	QP
8	16.4780	29.29	0.81	30.10	50.00	-19.90	AVG
9	18.9780	36.00	1.10	37.10	60.00	-22.90	QP
10	18.9780	33.40	1.10	34.50	50.00	-15.50	AVG
11	22.5459	23.17	1.03	24.20	60.00	-35.80	QP
12	22.5459	22.17	1.03	23.20	50.00	-26.80	AVG

Project No.:	**E201604066248**	**Probe:**	**-**
Standard:	**(CE)FCC PART 15.207**	**Power Source:**	**DC 12V**
Test item:	**Conduction Test**	**Date:**	**2016-4-25**
Temp./Hum.(%RH):	**20.5/52%RH**	**Time:**	**9:28:29**
EUT:	**Power smart**		
Model:	**PS2M-C1**	**Test Result:**	**Pass**
Note:			

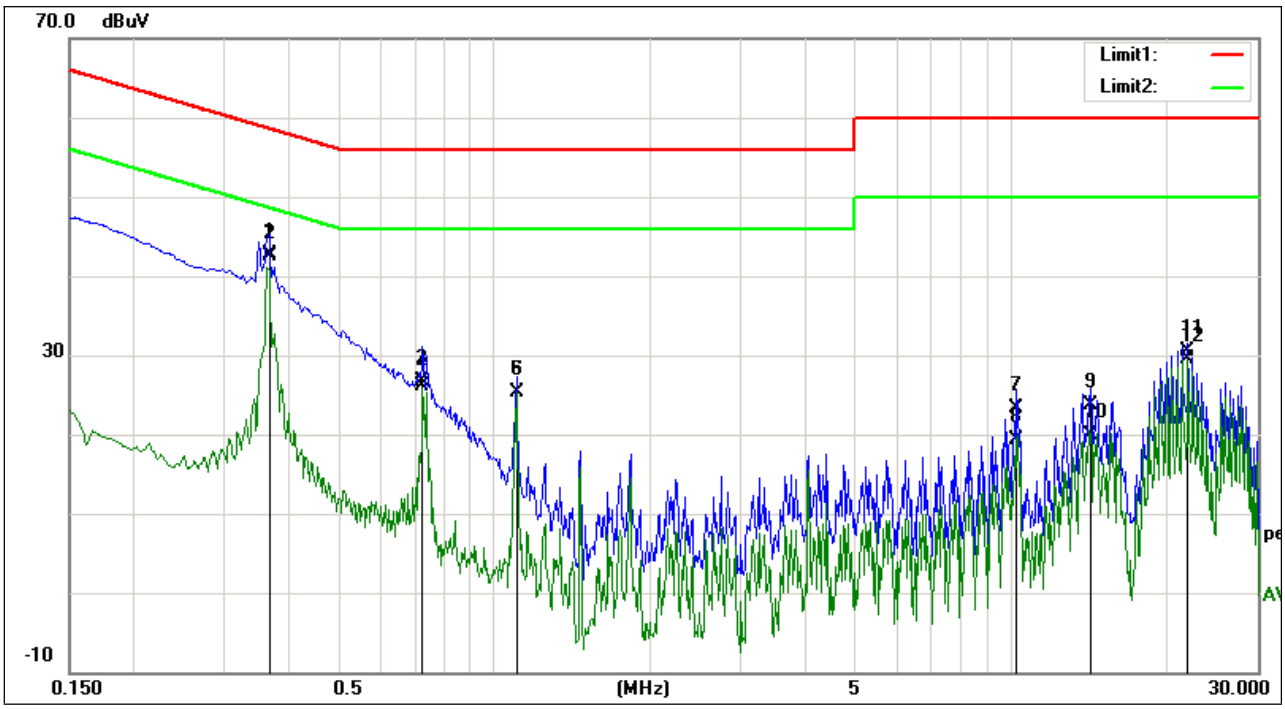

No.	Frequency (MHz)	Reading (dBuV)	Correct Factor(dB)	Result (dBuV)	Limit (dBuV)	Margin (dB)	Remark
1	0.3660	42.29	0.51	42.80	58.59	-15.79	QP
2	0.3660	42.09	0.51	42.60	48.59	-5.99	AVG
3	0.7260	26.33	0.47	26.80	56.00	-29.20	QP
4	0.7260	25.63	0.47	26.10	46.00	-19.90	AVG
5	1.1019	24.74	0.56	25.30	56.00	-30.70	QP
6	1.1019	24.74	0.56	25.30	46.00	-20.70	AVG
7	10.2380	22.55	0.75	23.30	60.00	-36.70	QP
8	10.2380	18.65	0.75	19.40	50.00	-30.60	AVG
9	14.2340	22.94	0.86	23.80	60.00	-36.20	QP
10	14.2340	19.04	0.86	19.90	50.00	-30.10	AVG
11	21.9740	29.60	1.00	30.60	60.00	-29.40	QP
12	21.9740	28.60	1.00	29.60	50.00	-20.40	AVG

4.5 RADIATED EMISSIONS WHICH FALL IN THE RESTRICTED BANDS

4.5.1 LIMITS

Section 15.205 Restricted bands of operation.

(a) Except as shown in paragraph (d) of this section. Only spurious emissions are permitted in any of the frequency bands listed below:

MHz	MHz	MHz	GHz
0.090 - 0.110	16.42 - 16.423	399.9 - 410	4.5 - 5.15
[1]0.495 - 0.505	16.69475 -	608 - 614	5.35 - 5.46
2.1735 - 2.1905	16.69525	960 - 1240	7.25 - 7.75
4.125 - 4.128	16.80425 -	1300 - 1427	8.025 - 8.5
4.17725 - 4.17775	16.80475	1435 - 1626.5	9.0 - 9.2
4.20725 - 4.20775	25.5 - 25.67	1645.5 - 1646.5	9.3 - 9.5
6.215 - 6.218	37.5 - 38.25	1660 - 1710	10.6 - 12.7
6.26775 - 6.26825	73 - 74.6	1718.8 - 1722.2	13.25 - 13.4
6.31175 - 6.31225	74.8 - 75.2	2200 - 2300	14.47 - 14.5
8.291 - 8.294	108 - 121.94	2310 - 2390	15.35 - 16.2
8.362 - 8.366	123 - 138	2483.5 - 2500	17.7 - 21.4
8.37625 - 8.38675	149.9 - 150.05	2655 - 2900	22.01 - 23.12
8.41425 - 8.41475	156.52475 -	3260 - 3267	23.6 - 24.0
12.29 - 12.293	156.52525	3332 - 3339	31.2 - 31.8
12.51975 -	156.7 - 156.9	3345.8 - 3358	36.43 - 36.5
12.52025	162.0125 - 167.17	3600 - 4400	
12.57675 -	167.72 - 173.2		
12.57725	240 - 285		
13.36 - 13.41	322 - 335.4		

4.5.2 TEST PROCEDURES

The EUT was placed on a table, which is 0.8meter above ground. Measurements are performed at distance 3.0m with a 0.6m loop antenna as described in 4.3.2 of ANSI C63.10.

Below 1GHz:

The bandwidth setting on the test receiver is 200Hz for 9 kHz~150 kHz and 9 kHz from 150 kHz~30MHz. the EUT is tested in a semi-anechoic chamber.

The FCC part 15 regulations and ANSI C63.10 test method must be used to find the maximum emission during Radiated Emission test.

Pre-test the EUT aligning the measurement antenna along the site axis, orthogonal to the axis, and then with the measurement antenna horizontal, found the measurement antenna orthogonal to the axis the worst case.The worst case emissions were reported.

4.5.3 TEST SETUP

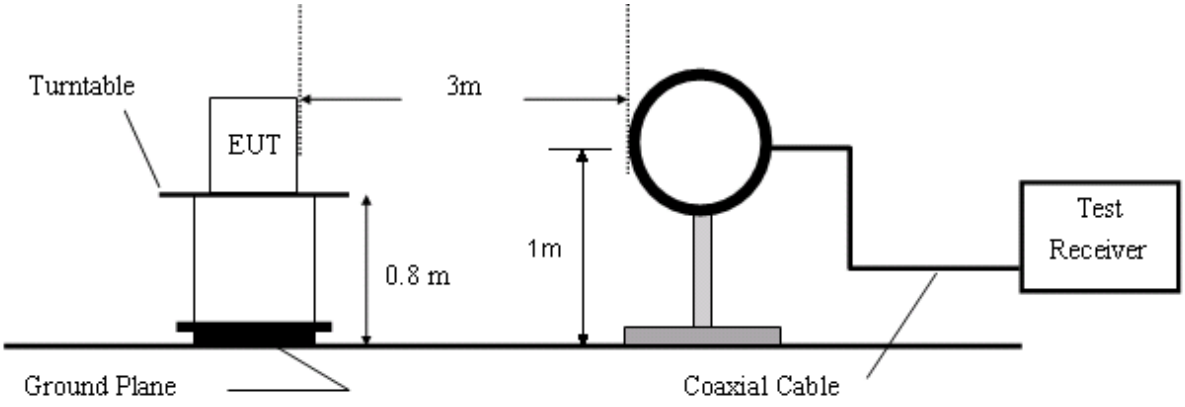

4.5.4 TEST RESULTS

Backup antenna

No.	Freq (MHz)	Reading (dBuV/m)	Factor Factor(dB/m)	Level (dBuV/m)	Limit (dBuV/m)	Over Limit (dB)	Remark	Pol V/H
1	0.0900	-24.11	54.82	30.71	108.48	-77.77	peak	Vertical
2	0.1100	-28.39	54.82	26.43	106.74	-80.31	peak	Vertical

LF antenna

No.	Freq (MHz)	Reading (dBuV/m)	Factor Factor(dB/m)	Level (dBuV/m)	Limit (dBuV/m)	Over Limit (dB)	Remark	Pol V/H
1	0.0900	-9.02	54.82	45.80	108.44	-62.64	peak	Vertical
2	0.1100	-2.92	54.82	51.90	106.70	-54.80	peak	Vertical

PSU antenna

No.	Freq (MHz)	Reading (dBuV/m)	Factor Factor(dB/m)	Level (dBuV/m)	Limit (dBuV/m)	Over Limit (dB)	Remark	Pol V/H
1	0.0900	-17.98	54.82	36.84	108.48	-71.64	peak	Vertical
2	0.1100	-8.04	54.82	46.78	106.74	-59.96	peak	Vertical

Remark: Max field strength in 3m distance. No any other emission which falls in restricted bands can be detected and be reported.
The tested values of Peak are lower than the correspondingly limited values of QP.So don't read the values of QP.

4.6 OCCUPIED BANDWIDTH

4.6.1 LIMITS

Per 15.215(c), Intentional radiators operating under the alternative provisions to the general emission limits, as contained in §§15.217 through 15.257 and in subpart E of this part, must be designed to ensure that the 20 dB bandwidth of the emission, or whatever bandwidth may otherwise be specified in the specific rule section under which the equipment operates, is contained within the frequency band designated in the rule section under which the equipment is operated.

4.6.2 TEST PROCEDURES

1. Make the EUT work in fixed frequency mode;
2. Set the spectrum analyzer: Span = approximately 2 to 3 times the 20dB bandwidth, centered on a hopping channel;
3. Set the spectrum analyzer: RBW >= 1% of the 20dB bandwidth (set 200Hz). VBW >= RBW. Sweep = auto; Detector Function = Peak. Trace = Max Hold.
4. Mark the peak frequency and -20dB points bandwidth.
5. bandwidth value is OBW value.

4.6.3 TEST SETUP

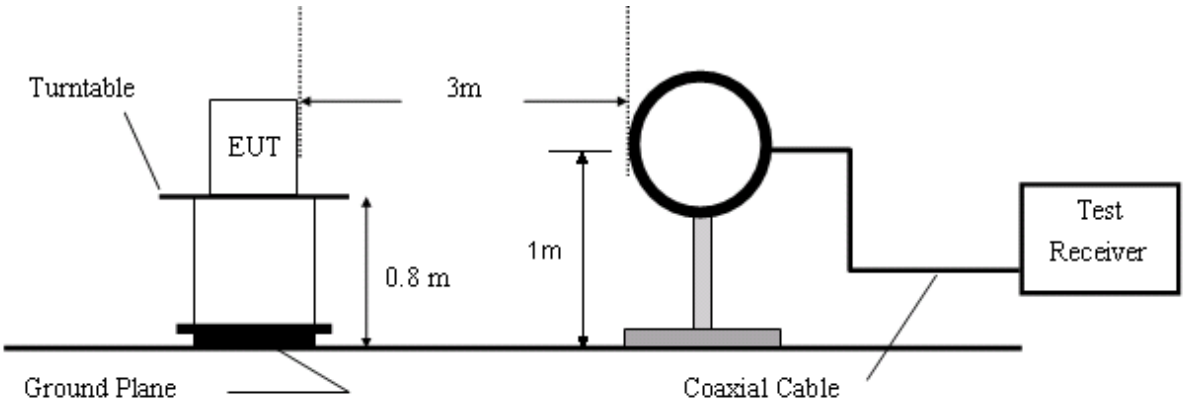

4.6.4 TEST RESULTS

Backup antenna

Frequency （kHz）	20dB Bandwidth Emission (kHz)
125	1.38

LF antenna

Frequency （kHz）	20dB Bandwidth Emission (kHz)
125	11.08

PSU antenna

Frequency （kHz）	20dB Bandwidth Emission (kHz)
125	10.77

APPENDIX A: PHOTOGRAPH OF THE TEST ARRANGEMENT

Radiated Emission

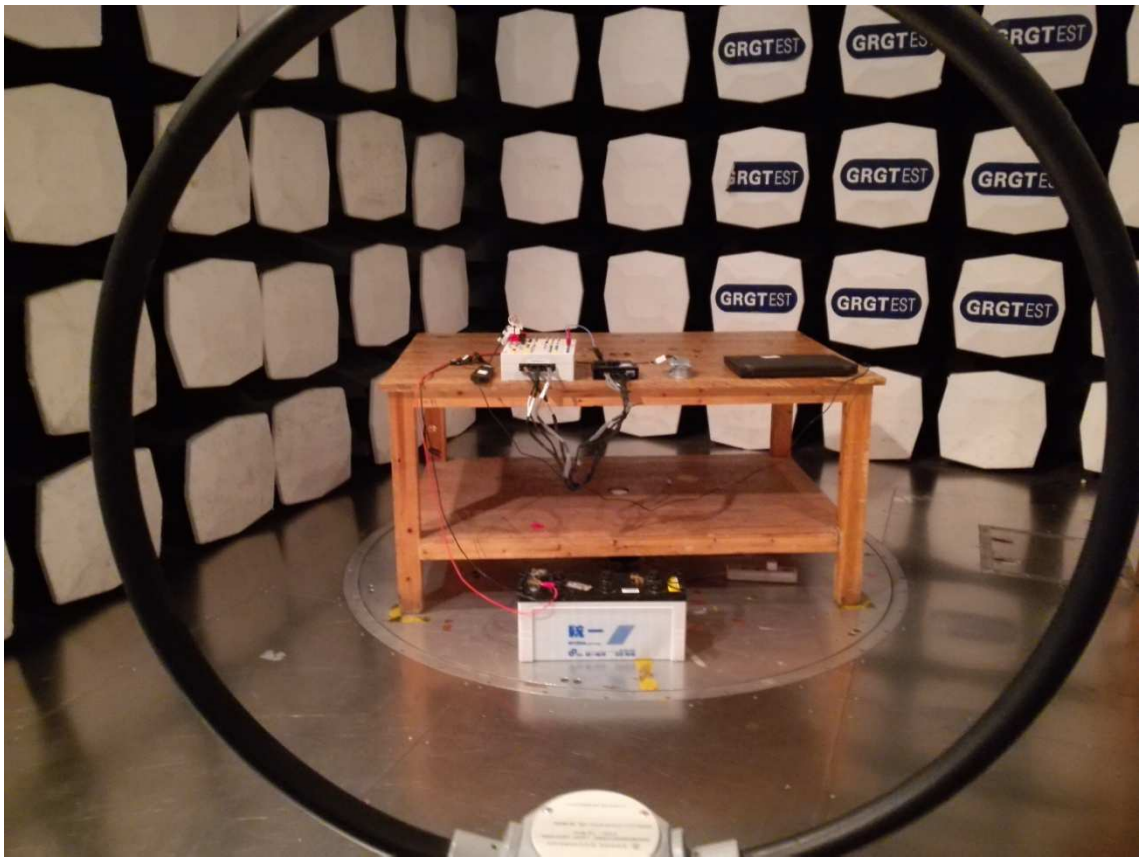

Conducted Emission

APPENDIX B: PHOTOGRAPH OF THE EUT

PS-0988

PS-0988

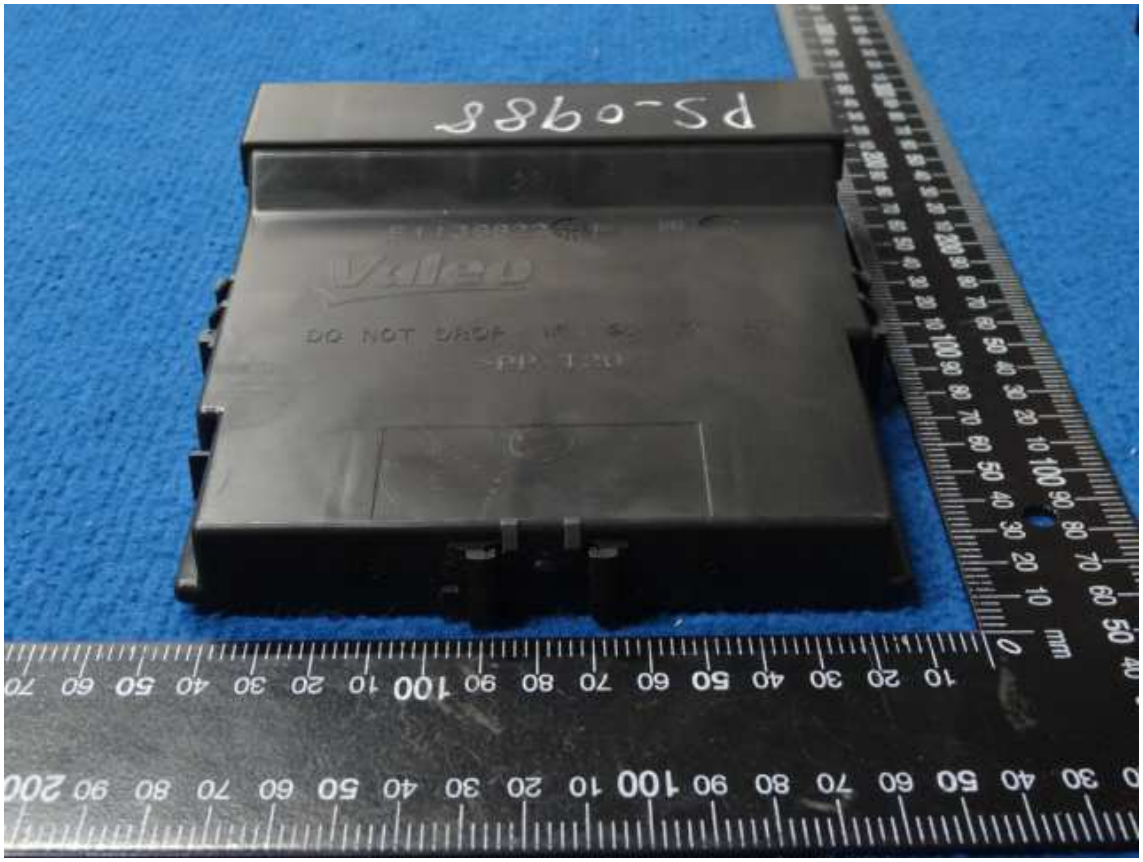
PS-0988
DO NOT USE

PS-0988

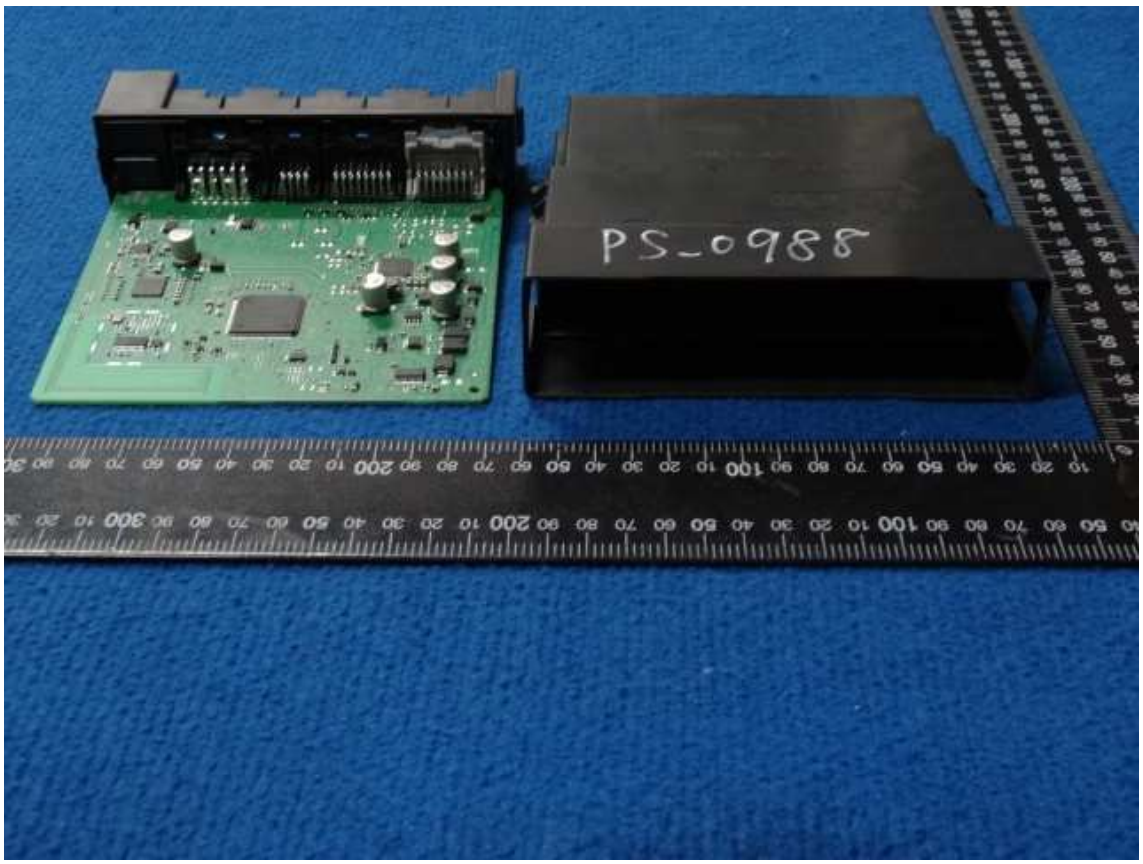
PS_0988

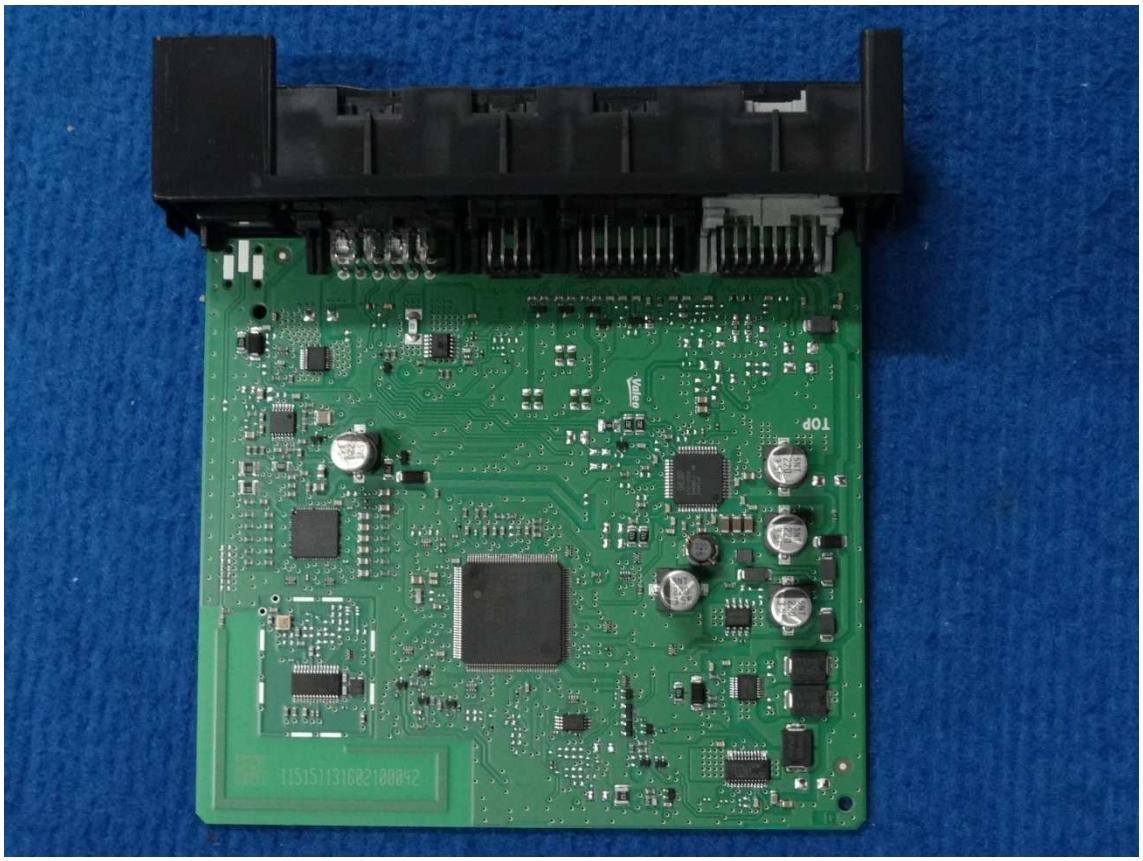
TOP

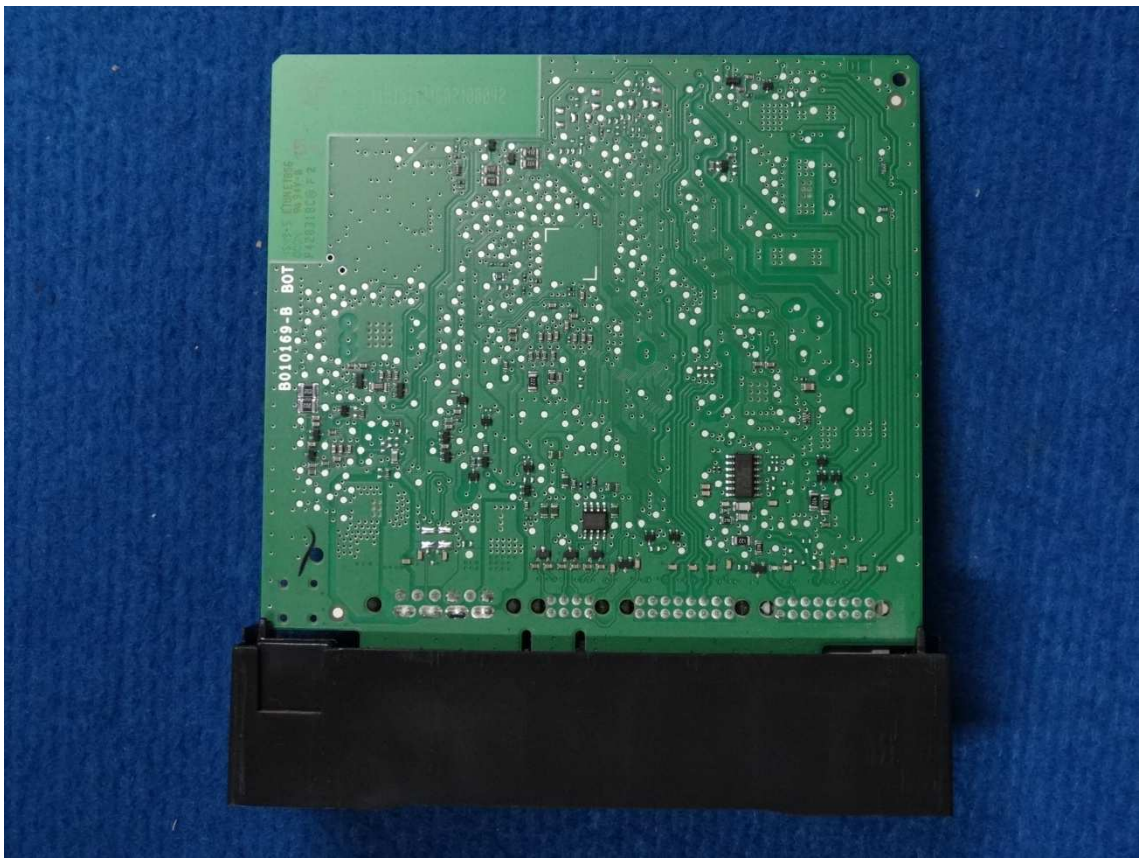

----------This is the last page of the report. ----------