6222D-UUC

Wi-Fi Dual-band 2X2 11ac +Bluetooth 5.0

Combo Module Datasheet

Proprietary & Confidential Information

6222D-UUC Module Datasheet

Office: 6 Floor, Building U6, Junxiang U8 Park,
Hangcheng Avenue, Bao'an District,
Shenzhen City, CHINA
Factory: No.8, Litong Road, Liuyang Economic & Technical
Development Zone, Changsha, Hunan, CHINA
TEL: +86-755-2955-8186
Website: www.fn-link.com

Customer Approval : _____ Company

_____ Title

_____ Signature

_____ Date

_____ Fn-Link

Revision History

Version	Date	Revision Content	Draft	Approved
1.0	2020/04/22	New version	LYJ	SZS
1.1	2020/06/09	Update Pin assignments, reference design and ordering information for share antenna version	LYJ	SZS
1.2	2020/08/04	Update Power on sequence	LYJ	SZS
1.3	2020/08/19	Update ordering information	LYJ	SZS
1.4	2020/08/26	Update 2.4G RF Specification	LYJ	SZS
1.5	2020/9/1	Update Module Picture and Marking Description	LYJ	SZS
2.0	2021/3/16	Add -W4 info	LGP	SZS

FN-LINK 欧智通

CONTENTS

1 Overview.....1
1.1 Introduction.....1
1.2 Features.....1
1.3 General Specification.....2
1.4 Recommended Operating Rating.....3
※1.5 EEPROM Information.....3
2 Wi-Fi RF Specification.....4
2.1 2.4GHz RF Specification.....4
2.2 5GHz RF Specification.....6
3 Bluetooth Specification.....10
3.1 Bluetooth Specification.....10
4 Pin Assignments.....11
5 Dimensions.....13
5.1 Module Picture.....13
5.2 Physical Outline.....14
5.3 Marking Description.....14
5.4 Layout Recommendation.....15
6 Reference Design.....16
7 Power on Sequence.....17
8 Ordering Information.....18
9 The Key Material List.....18
10 Recommended Reflow Profile.....19
11 Package Information.....20
11.1 Reel.....20
11.2 Packaging Detail.....20
10.3 Carrier Tape Detail.....22
10.4 Moisture sensitivity.....22

1 Overview

1.1 Introduction

Fn-Link Technology would like to announce a low-cost and low-power consumption module which has all of the Wi-Fi and Bluetooth functionalities. The highly integrated module makes the possibilities of web browsing, VoIP, Bluetooth headsets applications. With seamless roaming capabilities and advanced security, also could interact with different vendors' 802.11a/b/g/n/ac 2x2 Access Points in the wireless LAN.

The wireless module complies with IEEE 802.11 a/b/g/n/ac 2x2 MIMO standard and it can achieve up to a speed of 867Mbps with dual stream in 802.11n to connect the wireless LAN. The integrated module provides USB2.0 interface for Wi-Fi and Bluetooth.

This compact module is a total solution for a combination of Wi-Fi + BT technologies. The module is specifically developed for Smart TV and OTT Box application.

1.2 Features

- Highly integrated wireless local area network(WLAN) system-on-chip (SOC) for 5 GHZ 802.11ac, or 2.4G/5G 802.11n WLAN applications.
- Dual-stream spatial multiplexing up to 867 Mbps data rate.
- Supports 20/40MHz at 2.4GHz and supports 20/40/80MHz at 5GHz
- Supports USB interface for WLAN and Bluetooth.
- Complies with USB2.0 for WLAN and BT controller.
- Supports Bluetooth V5.0+HS, BLE and be backwards compatible with Bluetooth 1.2, 2.X+ enhance data rate.
- Supports Bluetooth for class1 , class2 and class3 power level transmissions.

Block Diagram:

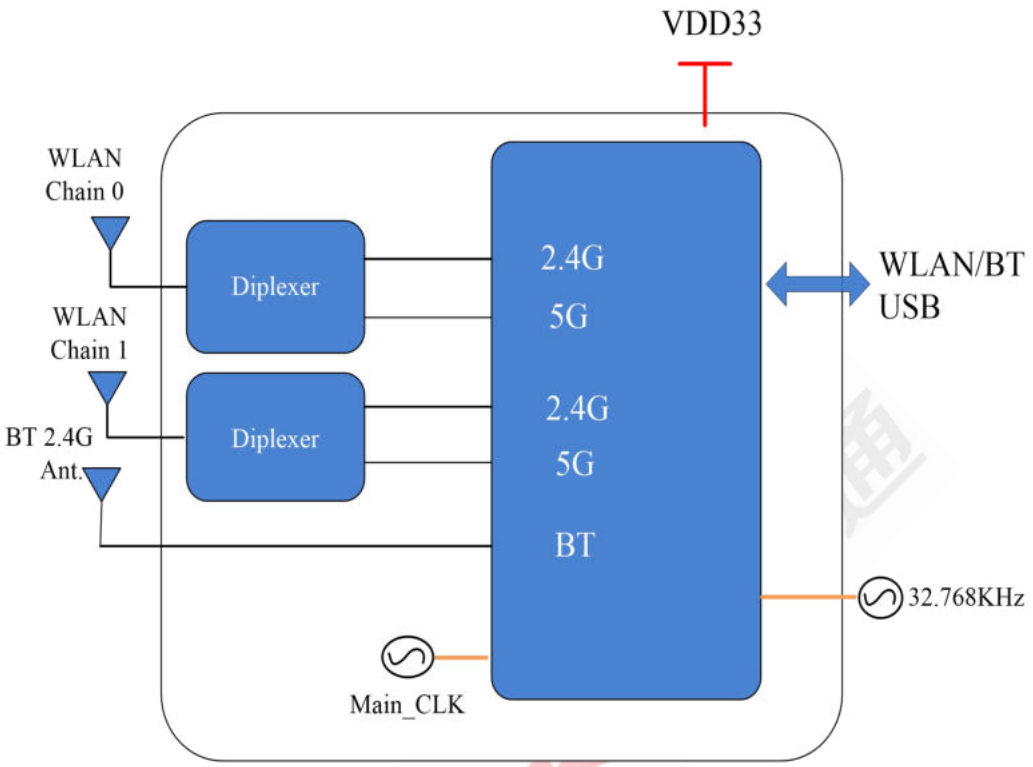

Note: The module has share antenna and non-share antenna version, please refer to the ordering information or contact us for detail.

1.3 General Specification

Model Name	6222D-UUC
Product Description	Support Wi-Fi/Bluetooth
Dimension	L x W x H: 27 x 18 x 2.03 mm
Wi-Fi Interface	USB 2.0
BT Interface	USB 2.0
Operating temperature	0°C [1] to 70°C
Storage temperature	-40°C to 85°C
Humidity	Operating Humidity 10% to 95% Non-Condensing
RoHS	All hardware components are fully compliant with EU RoHS directive

1. Operating temperature actually passed at -20°C.

1.4 Recommended Operating Rating

		Min.	Typ.	Max.	Unit
Operating Temperature		0	25	70	deg.C
VCC33		3.15	3.3	3.45	V
VDDIO		-	3.3	-	V
Power Consumption		VCC33 = 3.3V(Unit:mA)			
	Wi-Fi on Mode	130			
	TX (2.4G HT20)	459			
	RX (2.4G HT20)	210			
	TX (5G HT80)	510			
	RX (5G HT80)	210			
	BT on	32			

※1.5 EEPROM Information

WI-FI

Vendor ID	0BDAh
Product ID	C82Ch

2 Wi-Fi RF Specification

2.1 2.4GHz RF Specification

Feature	Description			
WLAN Standard	IEEE 802.11b/g/n Wi-Fi compliant			
Frequency Range	2.400 GHz ~ 2.497 GHz (2.4 GHz ISM Band)			
Number of Channels	2.4GHz：Ch1 ~ Ch14			
Output Power	802.11b /11Mbps : 17 dBm ± 1.5 dB @ EVM ≤ -9dB			
	802.11g /54Mbps : 15 dBm ± 1.5 dB @ EVM ≤ -25dB			
	802.11n /MCS7 : 14 dBm ± 1.5 dB @ EVM ≤ -28dB			
Spectrum Mask	Min. b/g/n	Typ. b/g/n	Max. b/g/n	Unit b/g/n
1st side lobes(to fc ± 11MHZ)	-	-40/-30/-40	-	dBr
2st side lobes(to fc ± 22MHZ)	-	-51/-33/-58	-	dBr
Freq. Tolerance	-20/-20/-20	-	20/20/20	ppm
Test Items	**Test Value**			**Standard Value**
SISO Receive Sensitivity (11b,20MHz) @8% PER	- 1Mbps	PER @ -92 dBm, typical		≤-83
	- 2Mbps	PER @ -90 dBm, typical		≤-80
	- 5.5Mbps	PER @ -87 dBm, typical		≤-79
	- 11Mbps	PER @ -85 dBm, typical		≤-76
SISO Receive Sensitivity (11g,20MHz) @10% PER	- 6Mbps	PER @ -89 dBm, typical		≤-85
	- 9Mbps	PER @ -88 dBm, typical		≤-84
	- 12Mbps	PER @ -87 dBm, typical		≤-82
	- 18Mbps	PER @ -84 dBm, typical		≤-80
	- 24Mbps	PER @ -81 dBm, typical		≤-77
	- 36Mbps	PER @ -78 dBm, typical		≤-73
	- 48Mbps	PER @ -73 dBm, typical		≤-69
	- 54Mbps	PER @ -71 dBm, typical		≤-68
SISO Receive Sensitivity (11n,20MHz) @10% PER	- MCS=0	PER @ -89 dBm, typical		≤-85
	- MCS=1	PER @ -86 dBm, typical		≤-82
	- MCS=2	PER @ -84 dBm, typical		≤-80
	- MCS=3	PER @ -80 dBm, typical		≤-77
	- MCS=4	PER @ -77 dBm, typical		≤-73
	- MCS=5	PER @ -72 dBm, typical		≤-69
	- MCS=6	PER @ -71 dBm, typical		≤-68

	- MCS=7 PER @ -69 dBm, typical	≤-67
SISO Receive Sensitivity (11n,40MHz) @10% PER	- MCS=0 PER @ -88 dBm, typical	≤-82
	- MCS=1 PER @ -85 dBm, typical	≤-79
	- MCS=2 PER @ -83 dBm, typical	≤-77
	- MCS=3 PER @ -79 dBm, typical	≤-74
	- MCS=4 PER @ -76 dBm, typical	≤-70
	- MCS=5 PER @ -71 dBm, typical	≤-66
	- MCS=6 PER @ -70 dBm, typical	≤-65
	- MCS=7 PER @ -68 dBm, typical	≤-64
MIMO Receive Sensitivity (11n ,20MHz) @10% PER	- MCS=0 PER @ -89 dBm, typical	≤-85
	- MCS=1 PER @ -86 dBm, typical	≤-82
	- MCS=2 PER @ -84 dBm, typical	≤-80
	- MCS=3 PER @ -80 dBm, typical	≤-77
	- MCS=4 PER @ -77 dBm, typical	≤-73
	- MCS=5 PER @ -72 dBm, typical	≤-69
	- MCS=6 PER @ -71 dBm, typical	≤-68
	- MCS=7 PER @ -69 dBm, typical	≤-67
	- MCS=8, PER @ -89 dBm, typical	≤-85
	- MCS=15, PER @ -69 dBm, typical	≤-67
MIMO Receive Sensitivity (11n,40MHz) @10% PER	- MCS=0 PER @ -88 dBm, typical	≤-82
	- MCS=1 PER @ -85 dBm, typical	≤-79
	- MCS=2 PER @ -83 dBm, typical	≤-77
	- MCS=3 PER @ -79 dBm, typical	≤-74
	- MCS=4 PER @ -76 dBm, typical	≤-70
	- MCS=5 PER @ -71 dBm, typical	≤-66
	- MCS=6 PER @ -70 dBm, typical	≤-65
	- MCS=7 PER @ -68 dBm, typical	≤-64
	- MCS=8, PER @ -88 dBm, typical	≤-82
	- MCS=15, PER @ -68 dBm, typical	≤-64
Maximum Input Level	802.11b : -10 dBm	
	802.11g/n : -20 dBm	
Antenna Reference	Small antennas with 0~2 dBi peak gain	

2.2 5GHz RF Specification

Feature	Description	
WLAN Standard	IEEE 802.11a/n/ac 2x2, Wi-Fi compliant	
Frequency Range	4.900 GHz ~ 5.845 GHz (5.0 GHz ISM Band)	
Number of Channels	5.0GHz：Please see the table[1]	
Output Power	802.11a /54Mbps : 15 dBm ± 1.5 dB @ EVM ≤ -25dB	
	802.11n /MCS7 : 14 dBm ± 1.5 dB @ EVM ≤ -28dB	
	802.11ac /MCS9 : 13 dBm ± 1.5 dB @ EVM ≤ -32dB	
Test Items	**Test Value**	**Standard Value**
SISO Receive Sensitivity (11a,20MHz) @10% PER	- 6Mbps PER @ -88 dBm	≤-85
	- 9Mbps PER @ -87 dBm	≤-84
	- 12Mbps PER @ -86 dBm	≤-82
	- 18Mbps PER @ -83 dBm	≤-80
	- 24Mbps PER @ -80 dBm	≤-77
	- 36Mbps PER @ -77 dBm	≤-73
	- 48Mbps PER @ -72 dBm	≤-69
	- 54Mbps PER @ -70 dBm	≤-68
SISO Receive Sensitivity (11n,20MHz) @10% PER	- MCS=0 PER @ -88 dBm	≤-85
	- MCS=1 PER @ -85 dBm	≤-82
	- MCS=2 PER @ -83 dBm	≤-80
	- MCS=3 PER @ -80 dBm	≤-77
	- MCS=4 PER @ -76 dBm	≤-73
	- MCS=5 PER @ -71 dBm	≤-69
	- MCS=6 PER @ -70 dBm	≤-68
	- MCS=7 PER @ -68 dBm	≤-67
MIMO Receive Sensitivity (11n,20MHz) @10% PER	- MCS=0 PER @ -89 dBm	≤-82
	- MCS=1 PER @ -88 dBm	≤-80
	- MCS=2 PER @ -86 dBm	≤-79
	- MCS=3 PER @ -83 dBm	≤-78
	- MCS=4 PER @ -79 dBm	≤-74
	- MCS=5 PER @ -74 dBm	≤-68
	- MCS=6 PER @ -73 dBm	≤-66
	- MCS=7 PER @ -71 dBm	≤-64
	- MCS=8 PER @ -89 dBm	≤-84
	- MCS=15 PER @ -68 dBm	≤-63

SISO Receive Sensitivity (11n,40MHz) @10% PER	- MCS=0 PER @ -85 dBm	≤-82
	- MCS=1 PER @ -82 dBm	≤-79
	- MCS=2 PER @ -80 dBm	≤-77
	- MCS=3 PER @ -77 dBm	≤-74
	- MCS=4 PER @ -73 dBm	≤-70
	- MCS=5 PER @ -69 dBm	≤-66
	- MCS=6 PER @ -67 dBm	≤-65
	- MCS=7 PER @ -66 dBm	≤-64
MIMO Receive Sensitivity (11n,40MHz) @10% PER	- MCS=0 PER @ -87 dBm	≤-79
	- MCS=1 PER @ -85 dBm	≤-76
	- MCS=2 PER @ -83 dBm	≤-74
	- MCS=3 PER @ -80 dBm	≤-71
	- MCS=4 PER @ -76 dBm	≤-67
	- MCS=5 PER @ -72 dBm	≤-63
	- MCS=6 PER @ -70 dBm	≤-62
	- MCS=7 PER @ -69 dBm	≤-63
	- MCS=8 PER @ -85 dBm	≤-79
	- MCS=15 PER @ -66 dBm	≤-61
SISO Receive Sensitivity (11ac,20MHz) @10% PER	- MCS=0, NSS1 PER @ -86 dBm	≤-82
	- MCS=1, NSS1 PER @ -84 dBm	≤-80
	- MCS=2, NSS1 PER @ -82 dBm	≤-77
	- MCS=3, NSS1 PER @ -79 dBm	≤-73
	- MCS=4, NSS1 PER @ -75 dBm	≤-69
	- MCS=5, NSS1 PER @ -70 dBm	≤-68
	- MCS=6, NSS1 PER @ -69 dBm	≤-67
	- MCS=7, NSS1 PER @ -68 dBm	≤-62
	- MCS=8, NSS1 PER @ -64 dBm	≤-60
MIMO Receive Sensitivity (11ac,20MHz) @10% PER	- MCS=0, NSS1 PER @ -88 dBm	≤-79
	- MCS=1, NSS1 PER @ -87 dBm	≤-77
	- MCS=2, NSS1 PER @ -85 dBm	≤-74
	- MCS=3, NSS1 PER @ -82 dBm	≤-71
	- MCS=4, NSS1 PER @ -78 dBm	≤-66
	- MCS=5, NSS1 PER @ -73 dBm	≤-65
	- MCS=6, NSS1 PER @ -72 dBm	≤-64
	- MCS=7, NSS1 PER @ -71 dBm	≤-59
	- MCS=8, NSS1 PER @ -67 dBm	≤-57

SISO Receive Sensitivity (11ac,40MHz) @10% PER	- MCS=0, NSS1 PER @ -84 dBm	≤-79
	- MCS=1, NSS1 PER @ -81 dBm	≤-77
	- MCS=2, NSS1 PER @ -79 dBm	≤-74
	- MCS=3, NSS1 PER @ -76 dBm	≤-70
	- MCS=4, NSS1 PER @ -73 dBm	≤-66
	- MCS=5, NSS1 PER @ -68 dBm	≤-65
	- MCS=6, NSS1 PER @ -67 dBm	≤-64
	- MCS=7, NSS1 PER @ -66 dBm	≤-59
	- MCS=8, NSS1 PER @ -61 dBm	≤-57
	- MCS=9, NSS1 PER @ -60 dBm	≤-55
MIMO Receive Sensitivity (11ac,40MHz) @10% PER	- MCS=0, NSS1 PER @ -86 dBm	≤-79
	- MCS=1, NSS1 PER @ -84 dBm	≤-76
	- MCS=2, NSS1 PER @ -82 dBm	≤-74
	- MCS=3, NSS1 PER @ -79 dBm	≤-72
	- MCS=4, NSS1 PER @ -76 dBm	≤-67
	- MCS=5, NSS1 PER @ -71 dBm	≤-63
	- MCS=6, NSS1 PER @ -70 dBm	≤-62
	- MCS=7, NSS1 PER @ -69 dBm	≤-61
	- MCS=8, NSS1 PER @ -64 dBm	≤-56
	- MCS=9, NSS1 PER @ -63 dBm	≤-54
SISO Receive Sensitivity (11ac,80MHz) @10% PER	- MCS=0, NSS1 PER @ -81 dBm	≤-79
	- MCS=1, NSS1 PER @ -78 dBm	≤-76
	- MCS=2, NSS1 PER @ -76 dBm	≤-74
	- MCS=3, NSS1 PER @ -72 dBm	≤-71
	- MCS=4, NSS1 PER @ -69 dBm	≤-67
	- MCS=5, NSS1 PER @ -66 dBm	≤-63
	- MCS=6, NSS1 PER @ -64 dBm	≤-62
	- MCS=7, NSS1 PER @ -62 dBm	≤-61
	- MCS=8, NSS1 PER @ -58 dBm	≤-56
	- MCS=9, NSS1 PER @ -56 dBm	≤-54
MIMO Receive Sensitivity (11ac,80MHz) @10% PER	- MCS=0, NSS1 PER @ -82 dBm	≤-76
	- MCS=1, NSS1 PER @ -81 dBm	≤-73
	- MCS=2, NSS1 PER @ -79 dBm	≤-71
	- MCS=3, NSS1 PER @ -75 dBm	≤-68
	- MCS=4, NSS1 PER @ -72 dBm	≤-64
	- MCS=5, NSS1 PER @ -69 dBm	≤-60

	- MCS=6, NSS1 PER @ -67 dBm	≤-59
	- MCS=7, NSS1 PER @ -65 dBm	≤-58
	- MCS=8, NSS1 PER @ -61 dBm	≤-53
	- MCS=9, NSS1 PER @ -60 dBm	≤-51
Maximum Input Level	802.11a/n : -30 dBm	
Antenna Reference	Small antennas with 0~2 dBi peak gain	

[1]5GHz(20MHz) Channel table

Band range	Operating Channel Numbers	Channel center frequencies(MHz)
5180MHz~5240MHz	36	5180
	40	5200
	44	5220
	48	5240
5260MHz~5320MHz	52	5260
	56	5280
	60	5300
	64	5320
5550MHz~5700MHz	100	5500
	104	5520
	108	5540
	112	5560
	116	5580
	120	5600
	124	5620
	128	5640
	132	5660
	136	5680
	140	5700
5745MHz~5825MHz	149	5745
	153	5765
	157	5785
	161	5805
	165	5825

3 Bluetooth Specification

3.1 Bluetooth Specification

Feature	Description		
General Specification			
Bluetooth Standard	Bluetooth V5.0 of 1, 2 and 3 Mbps.		
Host Interface	USB2.0		
Antenna Reference	Small antennas with 0~2 dBi peak gain		
Frequency Band	2402 MHz ~ 2480 MHz		
Number of Channels	79 channels		
Modulation	GFSK, π/4-DQPSK,8DPSK		
RF Specification			
	Min.	**Typical.**	**Max.**
Output Power (Class 1.5)	4 dBm	5.4 dBm	10 dBm
Sensitivity @ BER=0.1% for GFSK (1Mbps)	-92 dBm	-82 dBm	-70 dBm
Sensitivity @ BER=0.01% for π/4-DQPSK (2Mbps)	-92 dBm	-80 dBm	-70 dBm
Sensitivity @ BER=0.01% for 8DPSK (3Mbps)	-85 dBm	-80 dBm	-70 dBm
Maximum Input Level	GFSK (1Mbps):-20dBm		
	π/4-DQPSK (2Mbps) :-20dBm		
	8DPSK (3Mbps) :-20dBm		

4 Pin Assignments

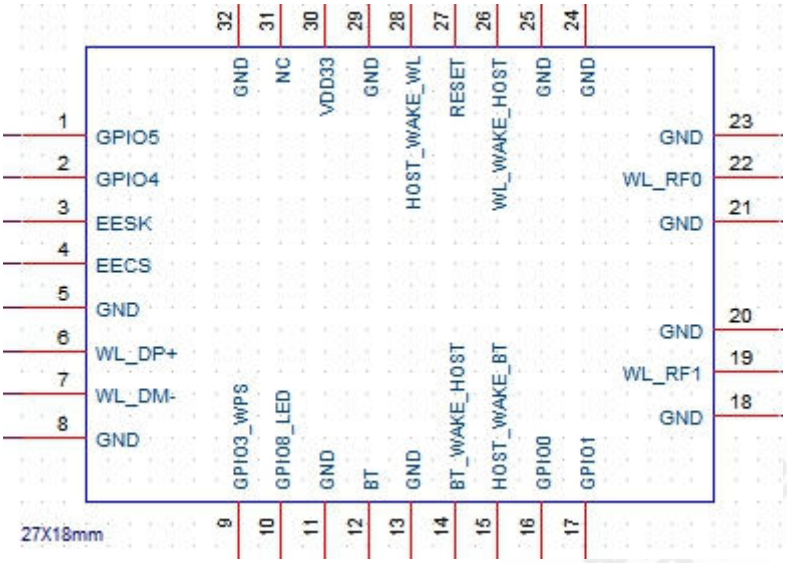

NO.	Name	Type	Description	Voltage
1	GPIO5	I/O	IC GPIO5 (sFlash MISO PIN)	
2	GPIO4	I/O	IC GPIO4 (sFlash MOSI PIN)	
3	EESK	I/O	External Serial Flash clock (sFlash for dongle application)	
4	EECS	I/O	External 32K or RTC clock input (sFlash CS PIN)	
5	GND	—	Ground connections	
6	WL_DP+	I/O	USB data+ (USB2.0)	
7	WL_DM-	I/O	USB data- (USB2.0)	
8	GND	—	Ground connections	
9	GPIO3_WPS	—	IC GPIO3(WLAN WPS)	
10	GPIO8_LED	—	IC GPIO8(WLAN LED low active)	
11	GND	—	Ground connections	
12	BT_RF	I/O	BT RF port	
13	GND	—	Ground connections	
14	BT_WAKE_HOST	O	BT wake up HOST	3.3V
15	HOST_WAKE_BT	I	HOST Wake up BT	3.3V
16	GPIO0	—	IC GPIO0	
17	GPIO1	—	IC GPIO1	

18	GND	—	Ground connections	
19	WL_RF1	I/O	2.4G/5G Wi-Fi RF port1 / BT Combo (Option)	
20	GND	—	Ground connections	
21	GND	—	Ground connections	
22	WL_RF0	I/O	2.4G/5G Wi-Fi RF port0 (Option)	
23	GND	—	Ground connections	
24	GND	—	Ground connections	
25	GND	—	Ground connections	
26	WL_WAKE_HOST	O	WLAN wake up HOST (Shared with IC GPIO6)	3.3V
27	RESET	I	Enable pin for device ON: pull high ; OFF: pull low	3.3V
28	HOST_WAKE_WL	I	HOST_WAKE_WLAN (Shared with IC GPIO7)	3.3V
29	GND	—	Ground connections	
30	VDD33	P	3.3V Voltage input	3.3V
31	NC	—	No connection (Floating)	
32	GND	—	Ground connections	

5 Dimensions

5.1 Module Picture

<table>
<tr><td>L x W: 27x 18(+0.3-0.1) mm
FG6222DUUC-W0/W2/W3
 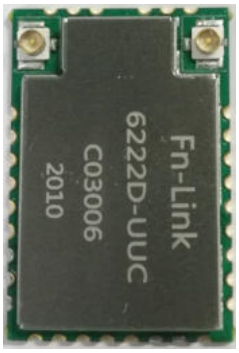

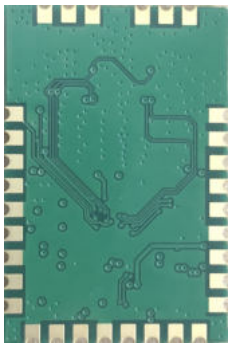

FG6222DUUC-W1/W4

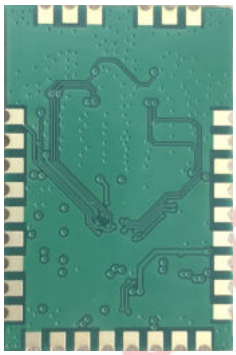 </td><td> 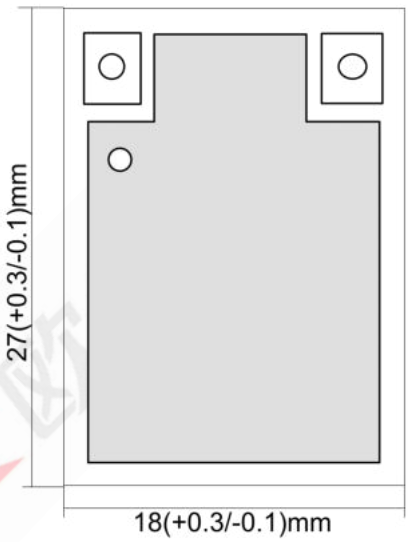
</td></tr>
<tr><td>H: 2.03(±0.1) mm</td><td> 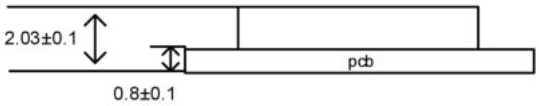
</td></tr>
<tr><td>Weight</td><td>1.58(±0.1)g</td></tr>
</table>

5.2 Physical Outline

(Unit: mm)

< TOP VIEW >

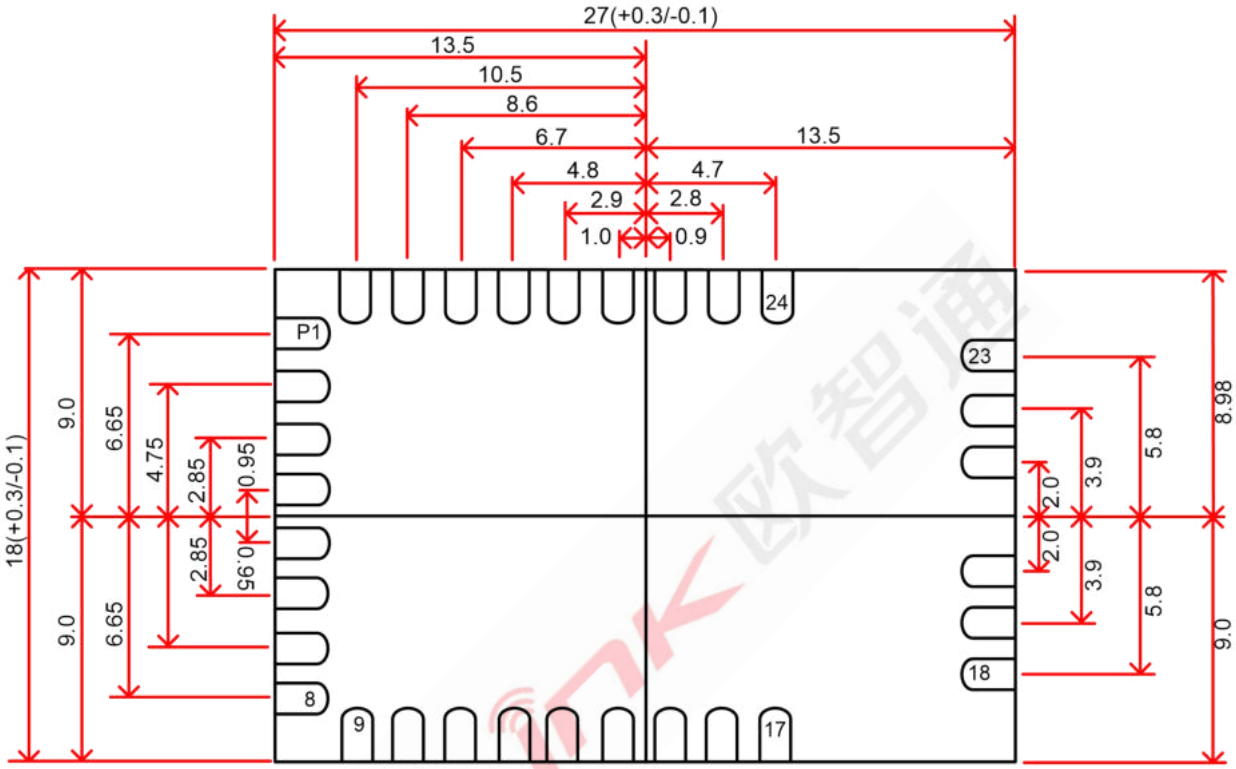

5.3 Marking Description

< TOP VIEW >

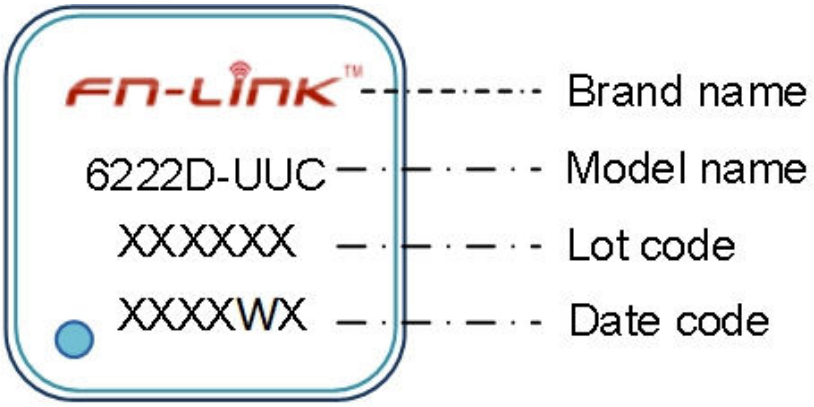

5.4 Layout Recommendation

(Unit: mm)

< TOP VIEW >

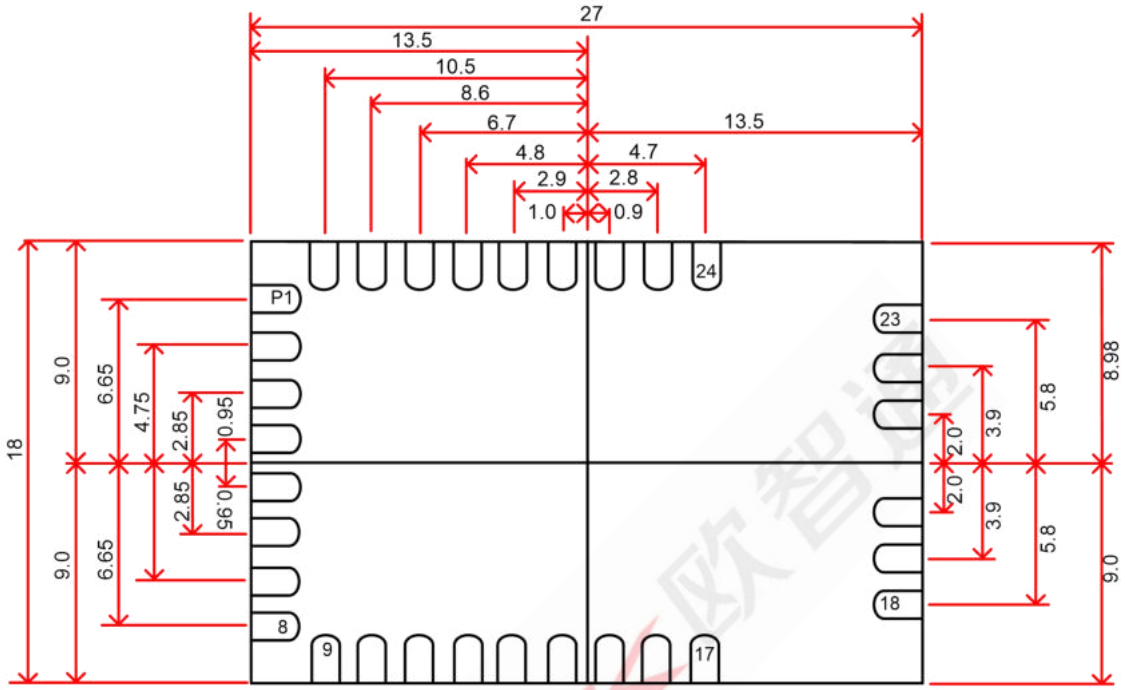

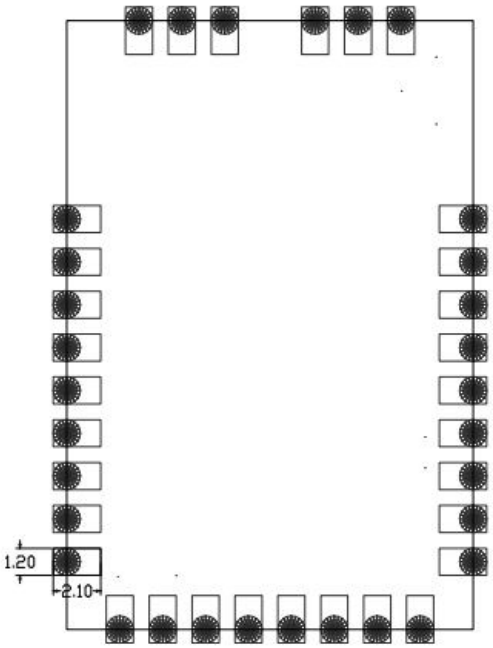

6 Reference Design

No Share BT Antenna:

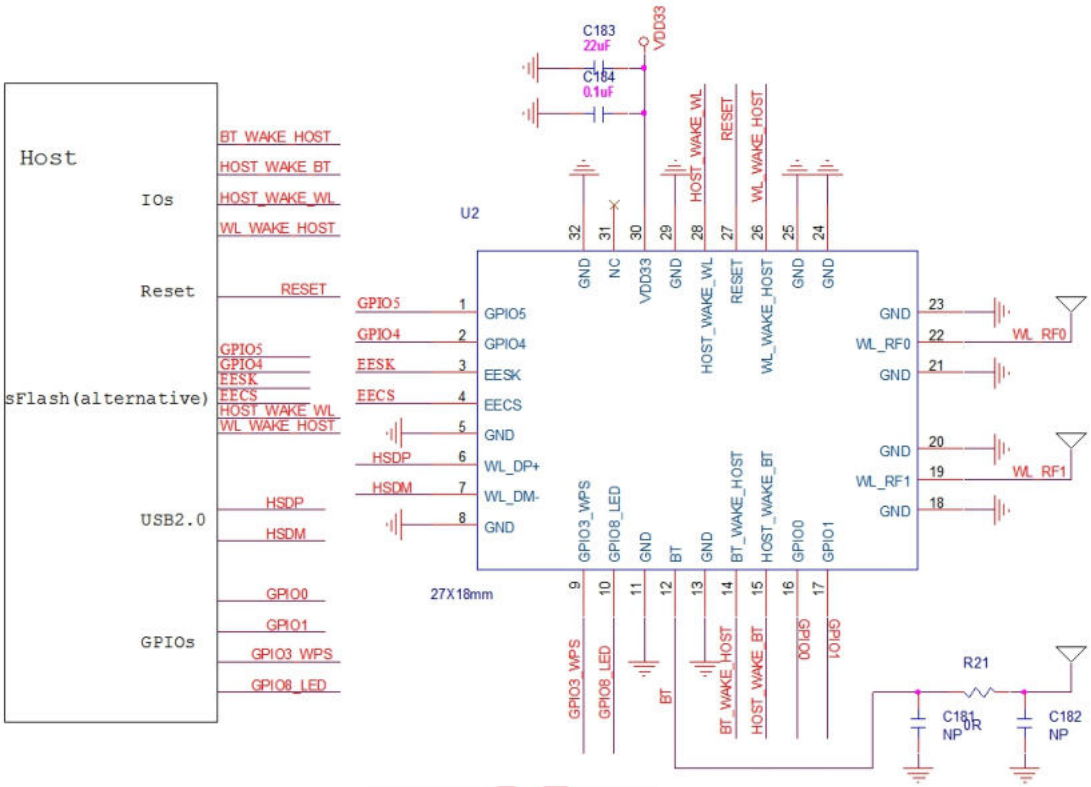

Share BT Antenna:

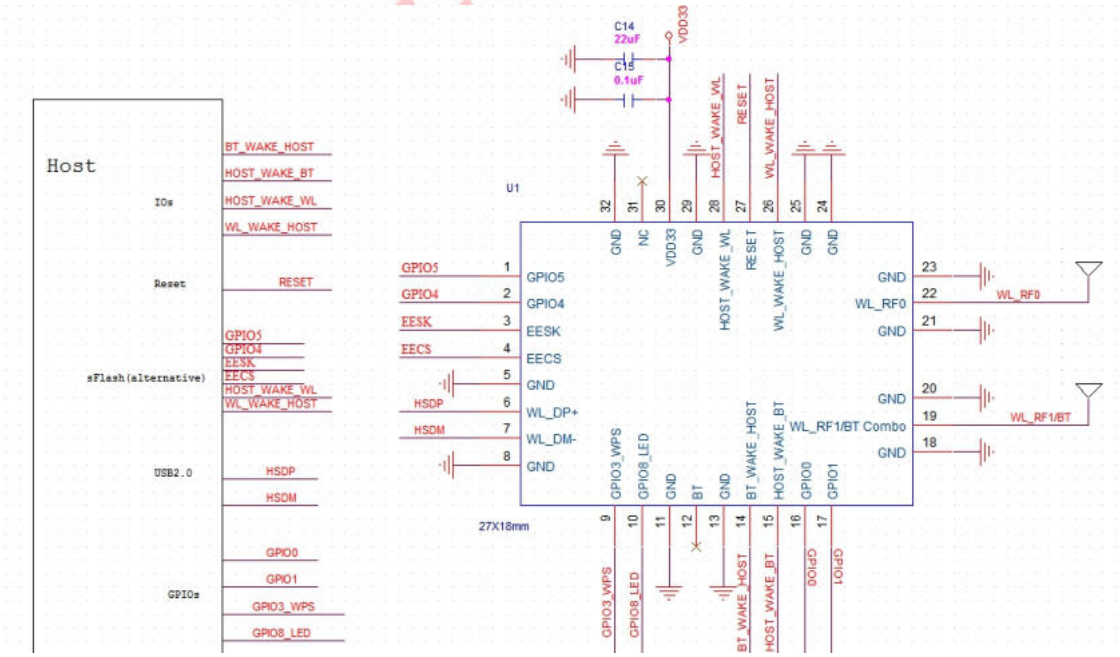

7 Power on Sequence

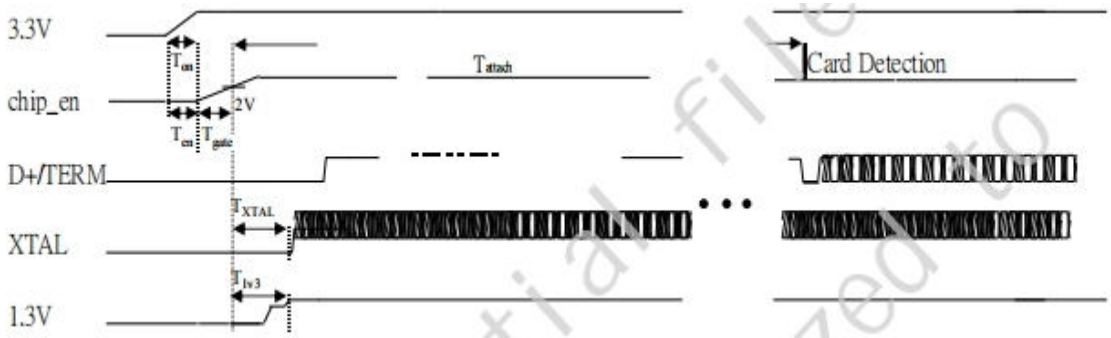

Figure 3. RTL8822CU USB Bus Power on Sequence

T_{on}: The main power ramp up duration

T_{en}: Interval between the rising point of 3.3V and chip_en

T_{gate}: Interval of 3.3V to be gated when chip_en voltage level < 2V

T_{attach}: USB attach state. The duration from resistor attached to USB host starting card detection procedure

T_{xtal}: XTAL starts

Power on Flow Description

After the main 3.3V ramp up, the internal power on reset is released by the power ready detection circuit and the power management unit is enabled. The power management unit enables the internal regulator and clock circuits.

The power management unit also enables the USB circuits.

USB analog circuits attach resisters to indicate the insertion of the USB device.

Table 14. Typical Timing Range

	Unit	Min.	Typical	Max.
T_{on}	ms	-	1.5	5
T_{en}	ms	0	0	5
T_{gate}	ms	0	1.5	8
T_{attach}	ms	100	250	-
T_{xtal}	ms	-	1.5	8

Realtek confidential file
The document authorized to
fn-link
2019-05-20 16:26:42

8 Ordering Information

Part No.	Description
FG6222DUUC-W0	RTL8822CU-CG,802.11a/b/g/n/ac+BLE5.0,2T2R+BT ANT,18.0*27.0,USB2.0，带天线座，双天线
FG6222DUUC-W1	RTL8822CU-CG,802.11a/b/g/n/ac+BLE5.0,2T2R+BT ANT,18.0*27.0,USB2.0,不带天线座，三天线
FG6222DUUC-W2	RTL8822CU-CG,a/b/g/n/ac,Wi-Fi+BLE5.0,2T2R+BT ANT,18X27mm,USB2.0,带天线座，三天线
FG6222DUUC-W3	RTL8822CU-CG,802.11a/b/g/n/ac+BLE5.0,2T2R+BT ANT,18.0*27.0,USB2.0,带天线座，三天线(12dbm)
FG6222DUUC-W4	RTL8822CU-CG,802.11a/b/g/n/ac+BLE5.0,2T2R+BT ANT,18.0*27.0,USB2.0，不带天线座，双天线

9 The Key Material List

Item	Part Name	Description	Manufacturer
1	Inductor	2016 2.2uH,±20%	Cenker, Sunlord, Ceaiya
2	Diplexer	1608 Dual-band, dual-mode 2.4GHz/5GHz WLAN	Glead, Walsin, ACX, Murata, MAG.LAYERS
3	Crystal	3225 40MHz -40~110℃	ECEC, TKD, Hosonic, JWT, TXC
4	Chipset	RTL8822CU-CG	Realtek
5	PCB	FR4, 4 LAYER, GREEN	XY-PCB, GDKX, Sunlord, SLPCB

10 Recommended Reflow Profile

Referred to IPC/JEDEC standard.

Peak Temperature: <250°C

Number of Times: ≤2 times

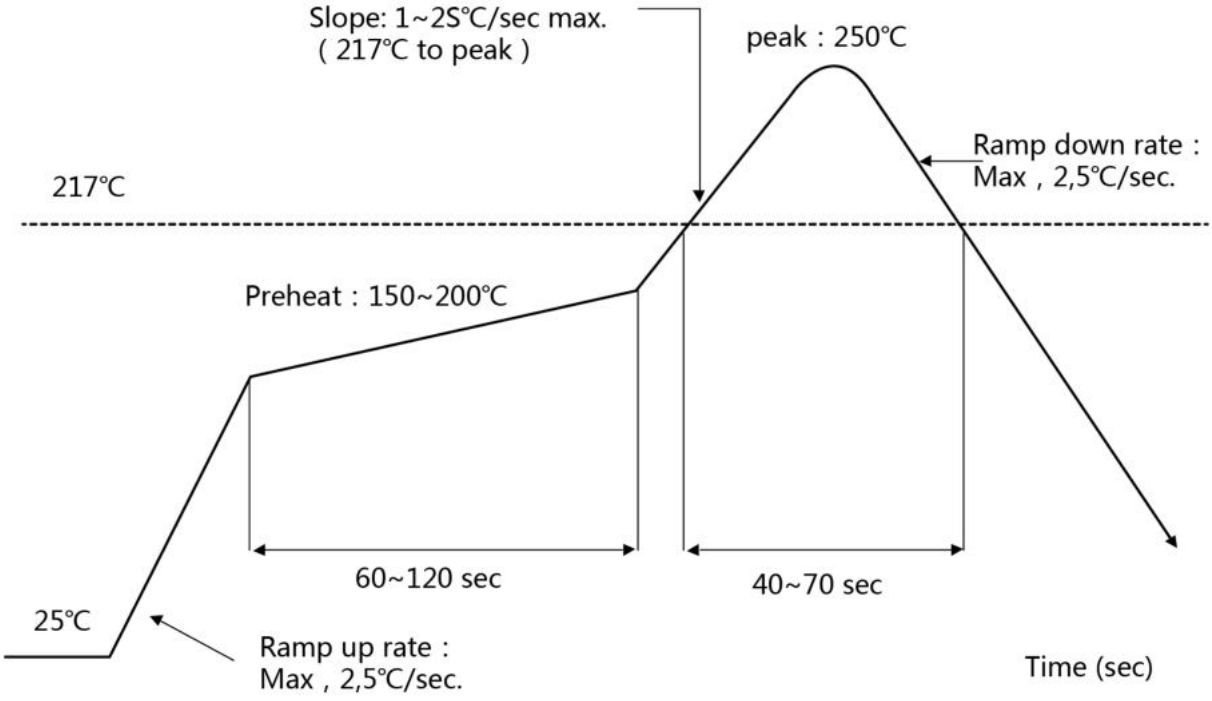

11 Package Information

11.1 Reel

A roll of 800pcs

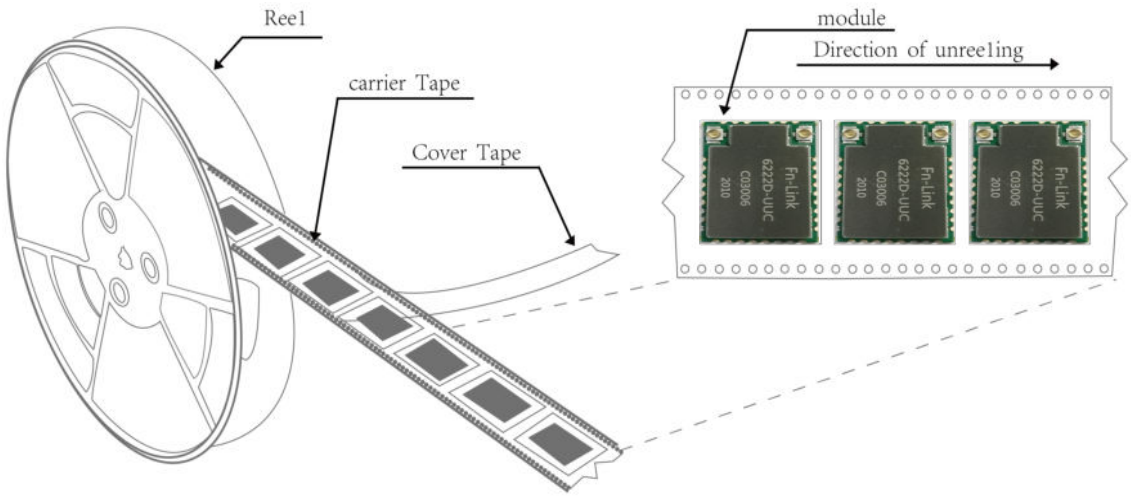

11.2 Packaging Detail

the take-up package

Using self-adhesive tape
Size of black tape:24mm*32.6m the cover tape :2.13mm*32.6m
Color of plastic disc:blue
A roll of 800pcs

NY bag size:460mm*385mm

size ： 350*350*35mm

The packing case size:350*210*370mm

10.3 Carrier Tape Detail

ITEM	W	A0	B0	D	E	F	F1	K0	P0	P2	P	T
DIM	44	18.45	27.75	1.5	1.75	20.2	40.4	2.80	4.0	2.0	24.0	0.30
TOLE	+0.3 -0.3	±0.15	±0.15	+0.1 -0.0	±0.1	±0.15	±0.10	±0.10	±0.1	±0.15	±0.1	±0.05

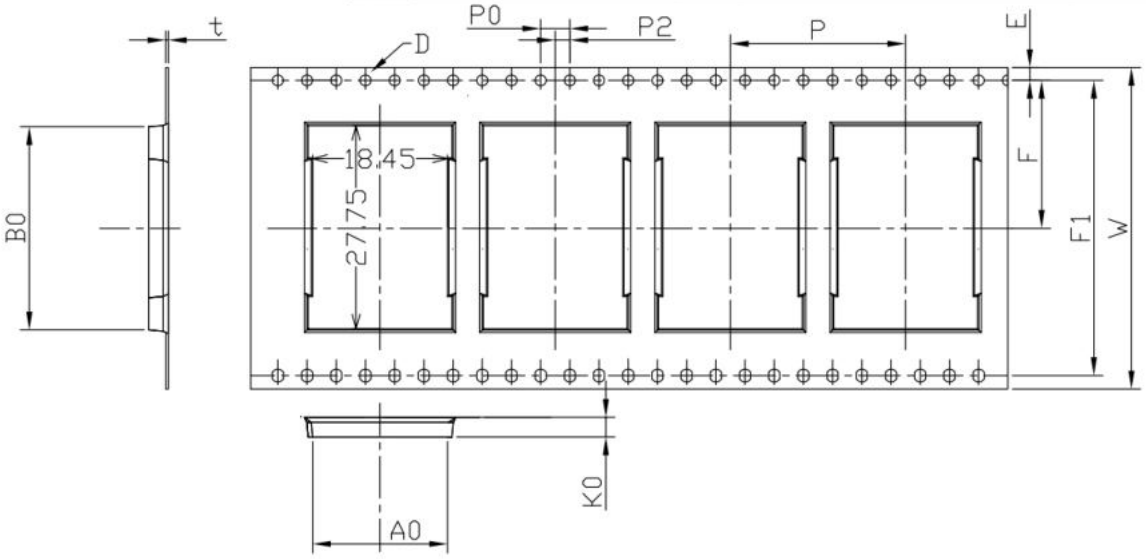

10.4 Moisture sensitivity

The Modules is a Moisture Sensitive Device level 3, in according with standard IPC/JEDEC J-STD-020, take care
all the relatives requirements for using this kind of components.
Moreover, the customer has to take care of the following conditions:
a) Calculated shelf life in sealed bag: 12 months at <40°C and <90% relative humidity (RH)
b) Environmental condition during the production: 30°C / 60% RH according to IPC/JEDEC J-STD-033A paragraph 5
c) The maximum time between the opening of the sealed bag and the reflow process must be 168 hours if condition
b) “IPC/JEDEC J-STD-033A paragraph 5.2” is respected
d) Baking is required if conditions b) or c) are not respected
e) Baking is required if the humidity indicator inside the bag indicates 10% RH or more

Single Modular approval Declaration letter

We ， HUNAN FN-LINK TECHNOLOGY LIMITED apply Single modular approval for
Product Name: Wi-Fi/BT Module
Model: 6222D-UUC
FCC ID: 2AATL-6222D-UUC
According to 996369 D01 Module Equip Auth Guide v01r04 and 15.212 requirement:

1) The radio elements must have the radio frequency circuitry shielded. Physical components and tuning capacitor(s) may be located external to the shield, but must be on the module assembly;
Answer ： Yes， shielded for both side .

2) The module must have buffered modulation/data inputs to ensure that the device will comply with Part 15 requirements with any type of input signal;
Answer ：Yes ；All inputs to the modules are buffered through logic or microprocessor inputs.

3)The modular transmitter must have its own power supply regulation.
Answer ：Yes ；A low drop out regulator is used for modular power supply regulation.

4) The module must contain a permanently attached antenna, or contain a unique antenna connector, and be marketed and operated only with specific antenna(s), per Sections 15.203, 15.204(b), 15.204(c), 15.212(a), 2.929(b);
Answer ： Yes ； Device is equipped with PCB antenna.

(5) The module must demonstrate compliance in a stand-alone configuration; Answer ： Yes ， distance between modular and all AEs are bigger than 10cm ， refer to setup photo.

(6) The module must be labeled with its permanently affixed FCC ID label, or use an electronic display (See KDB Publication 784748 about labelling requirements);
Answer ： Yes ； The modular has a permanent fixed label, and below statement was listed in the User Manual;The host device must be labeled to display the FCC ID of the module "Contains FCC ID: 2AATL-6222D-UUC"

(7) The module must comply with all specific rules applicable to the transmitter including all the conditions provided in the integration instructions by the grantee;
Answer ： Yes ； The module comply with all specific rules applicable to the transmitter including all the conditions provided in the integration instructions by the grantee, Refer to test report and user manual .

(8) The module must comply with RF exposure requirements
Answer ： Yes ； Transmitter meets MPE calculation of 47 CFR 1.1307 . Refer to MPE Reports and Refer to modular installation manual

Please contact me if you have any further questions. Thanks for your attention.
Best Regards,

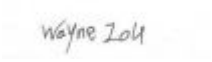

Chief Executive Officer
HUNAN FN-LINK TECHNOLOGY
LIMITED

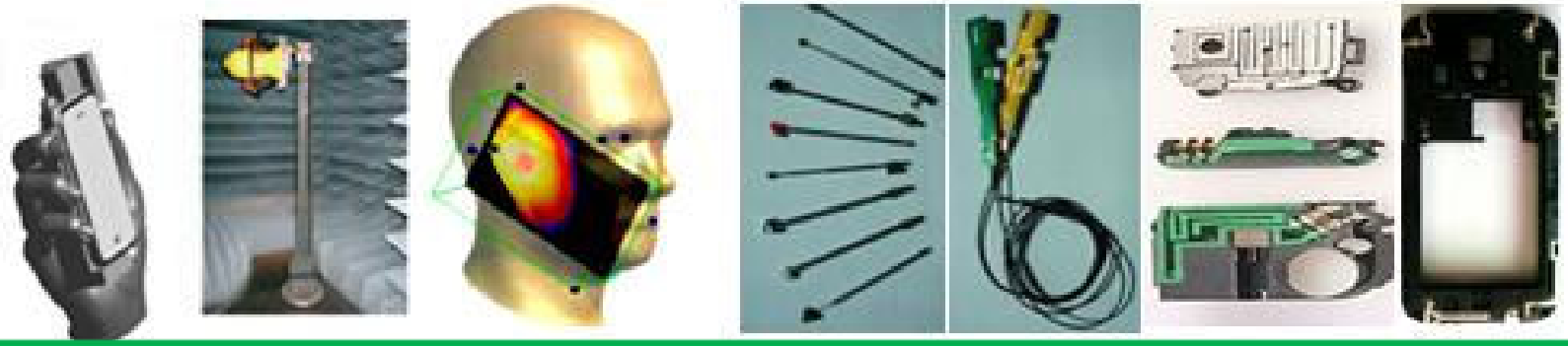

天线测试报告 V1.0

联系方式:

13410505014

wangyuanjian@qinxinsz.com

357932305@qq.com

射频: 刘工

日期: 2020.08.12

目录

1	匹配电路
2	无源图
3	无源效率
4	天线图纸
5	
6	

测试环境

- 天线特性使用ETS测试系统微波暗室，微波暗室尺寸7m x 4m x 3m，测试频率700MHz---6GHz.
- S11 测试使用Agilent E5071B 网络分析仪

微波暗室

Agilent E5071B 网络分析仪

1.匹配电路：

匹配电路是否有改动：否

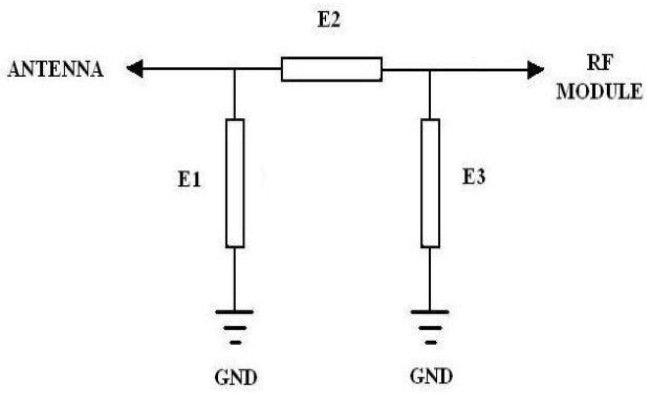

WIFI	
Element	Value
E1	**无**
E2	**无**
E3	**无**

2.无源图

回波损耗图

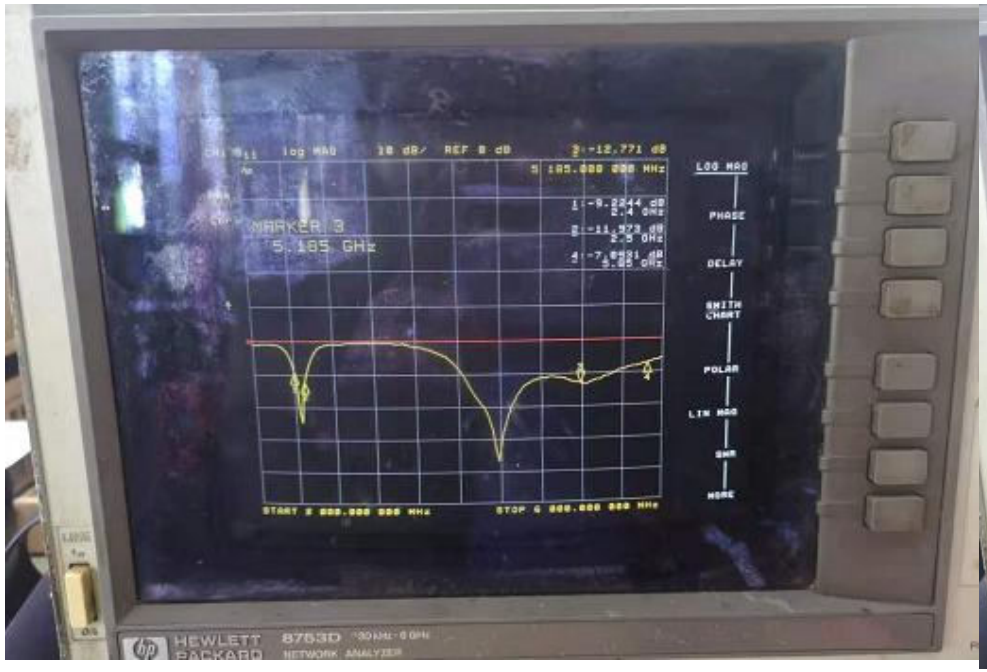

Smith 图

3.无源效率

2.4-2.5GHz

Freq (MHz)	Effi (%)	Effi (dB)	Gain (dBi)
2400	36.65	-4.52	2.35
2410	35.79	-4.35	2.07
2420	35.46	-4.67	2.02
2430	37.56	-4.51	2.37
2440	38.27	-3.21	2.75
2450	40.45	-3.72	2.88
2460	42.16	-3.75	2.89
2470	42.71	-4.45	2.82
2480	39.54	-4.73	2.24
2490	38.78	-4.57	2.18
2500	37.68	-4.34	2.34

2.4-2.5GHz

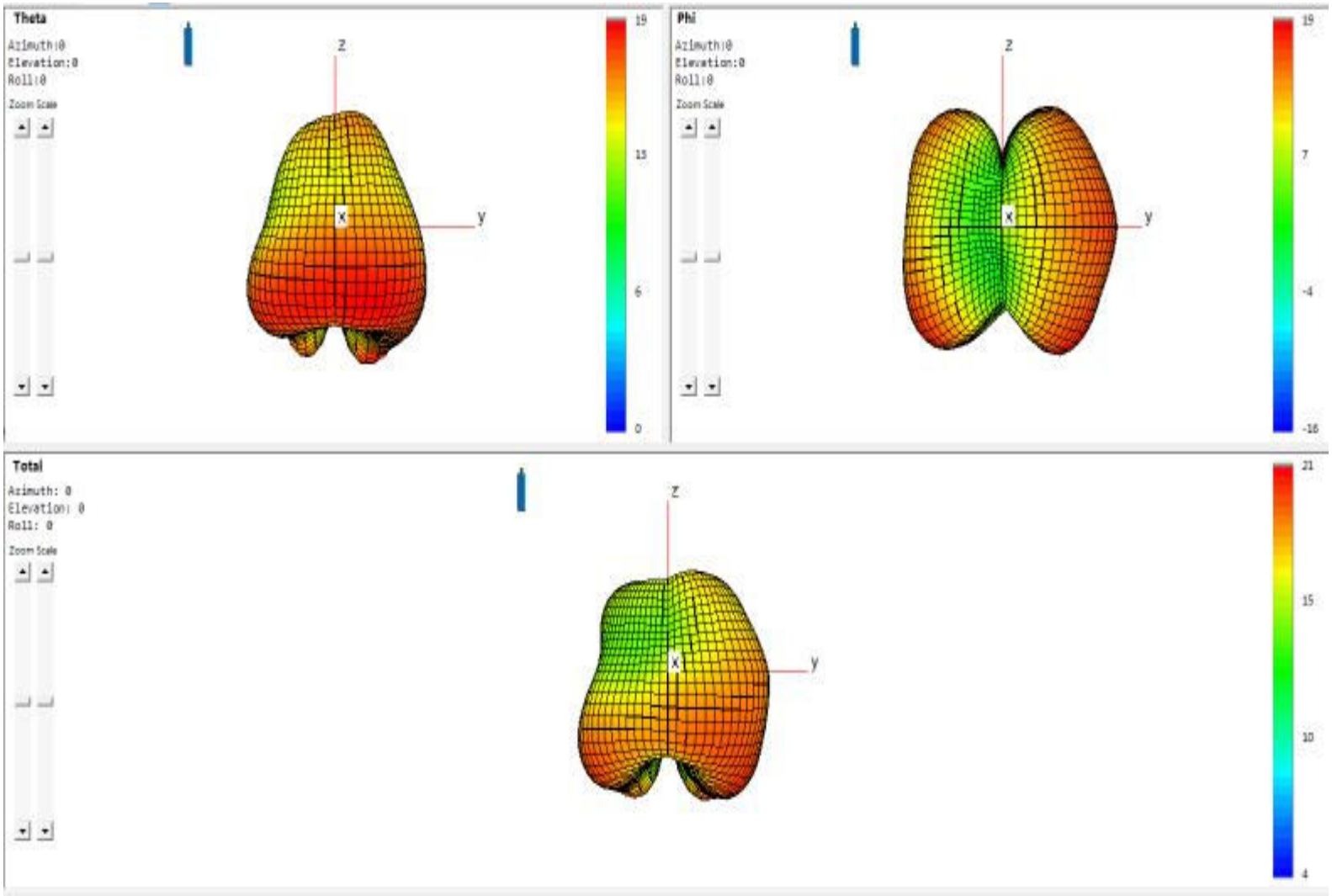
Theta
Azimuth:0
Elevation:0
Roll:0
Zoom Scale
z
x
y
19
15
6
0
Phi
Azimuth:0
Elevation:0
Roll:0
Zoom Scale
z
x
y
19
7
-4
-16
Total
Azimuth: 0
Elevation: 0
Roll: 0
Zoom Scale
z
x
y
21
15
10
4

3.无源效率

5.15-5.85GHz

Freq (MHz)	Effi (%)	Effi (dB)	Gain (dBi)
5150	45.35	-4.52	1.29
5160	45.97	-4.44	1.46
5170	48.22	-4.18	1.56
5180	44.5	-4.62	1.41
5190	41.11	-5.07	1.55
5200	43.7	-4.72	1.17
5210	45.95	-4.44	1.12
5220	49.46	-4.04	1.55
5230	47.61	-4.25	1.26
5240	44.74	-4.59	1.09
5250	43.25	-4.78	1.21
5260	44.62	-4.61	1.23
5270	49.71	-4.01	1.67
5280	47.84	-4.22	1.48
5290	47.87	-4.22	1.58
5300	43.76	-4.72	1.19
5310	42.91	-4.83	1.11
5320	49.02	-4.09	1.05
5330	48.92	-4.1	1.17
5340	49.25	-4.06	1.3
5350	47.64	-4.24	1.29
5360	44.33	-4.64	1.87

Freq (MHz)	Effi (%)	Effi (dB)	Gain (dBi)
5380	39.52	-4.03	1.69
5390	40.41	-3.93	1.88
5400	43.63	-3.6	2.26
5410	40.2	-3.96	1.95
5420	41.62	-3.81	2.19
5430	42.65	-3.7	2.34
5440	45.97	-3.38	2.64
5450	44.26	-3.54	2.51
5460	42.71	-3.69	2.28
5470	42.11	-3.76	2.28
5480	41.56	-3.81	2.21
5490	47.58	-3.23	2.89
5500	46.8	-3.3	2.82
5510	45	-3.47	2.54
5520	42.84	-3.68	2.35
5530	41.39	-3.83	2.19
5540	45.51	-3.42	2.56
5550	48.49	-3.14	2.66
5560	47.63	-3.22	2.77
5570	44.93	-3.47	2.42
5580	42.91	-3.67	2.2
5590	44.48	-3.52	2.33
5600	46.5	-3.33	2.39
5610	45.52	-3.42	2.28

Freq (MHz)	Effi (%)	Effi (dB)	Gain (dBi)
5620	43.77	-3.59	2.07
5630	42.17	-3.75	1.91
5640	43.31	-3.63	2.09
5650	46.75	-3.3	2.42
5660	48.1	-3.18	2.48
5670	46.61	-3.31	2.11
5680	43.88	-3.58	1.88
5690	42.45	-3.72	1.6
5700	44.22	-3.54	1.78
5710	47.77	-3.21	2.09
5720	49.33	-3.07	2.29
5730	46.31	-3.34	1.73
5740	41.38	-3.83	1.52
5750	40.92	-3.88	1.25
5760	44.37	-3.53	1.51
5770	46.85	-3.29	1.8
5780	45.37	-3.43	1.61
5790	39.09	-4.08	0.92
5800	34.9	-4.57	0.77
5810	37.56	-4.25	0.87
5820	41.71	-3.8	1.23
5830	45.11	-3.46	1.41
5840	37.81	-4.22	0.72
5850	32.38	-4.9	0.66

5.15-5.85GHz

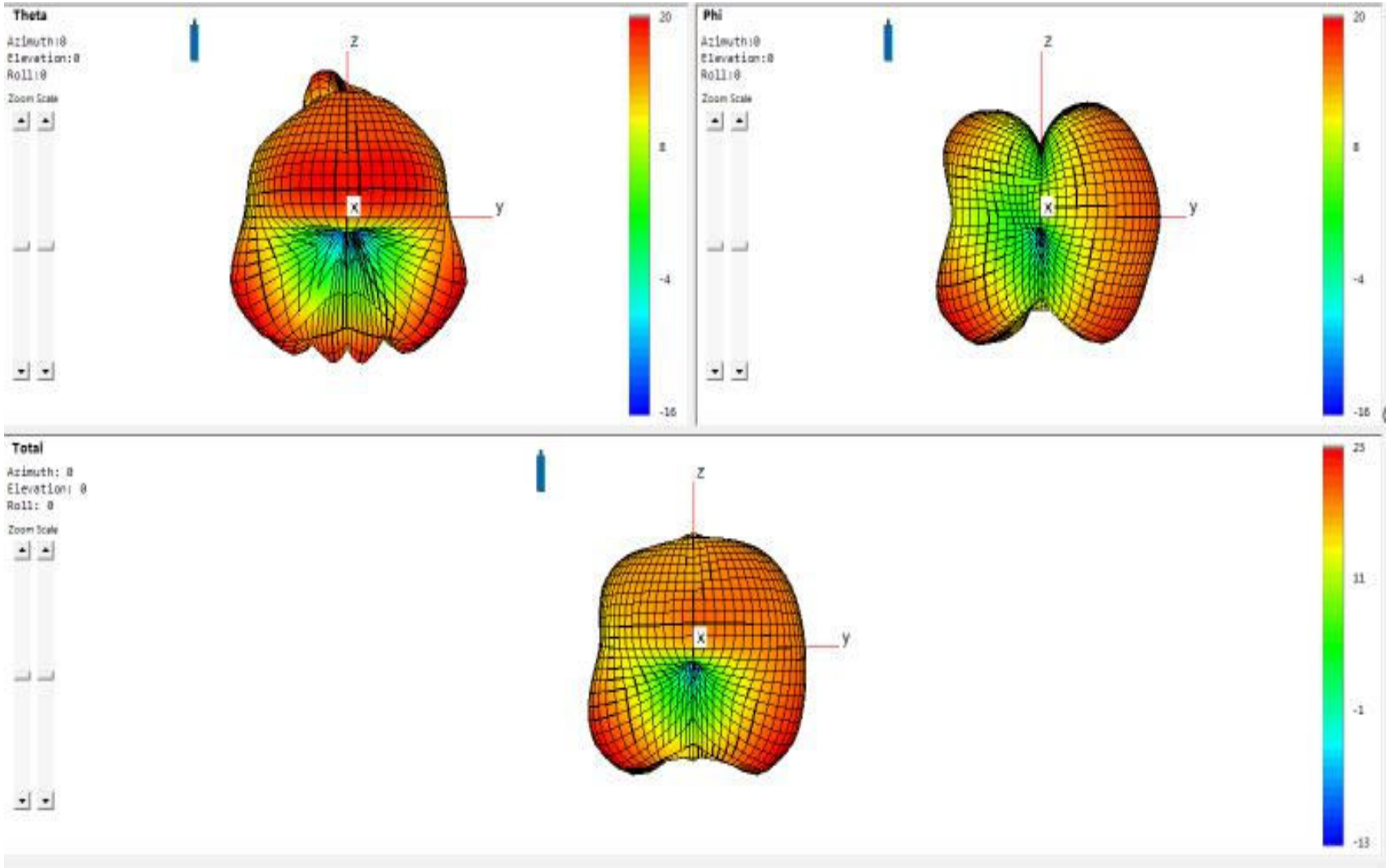
Theta
Azimuth:0
Elevation:0
Roll:0
Zoom Scale
z
x
y
20
8
-4
-16
Phi
Azimuth:0
Elevation:0
Roll:0
Zoom Scale
z
x
y
20
8
-4
-16
Total
Azimuth: 0
Elevation: 0
Roll: 0
Zoom Scale
z
x
y
25
11
-1
-13

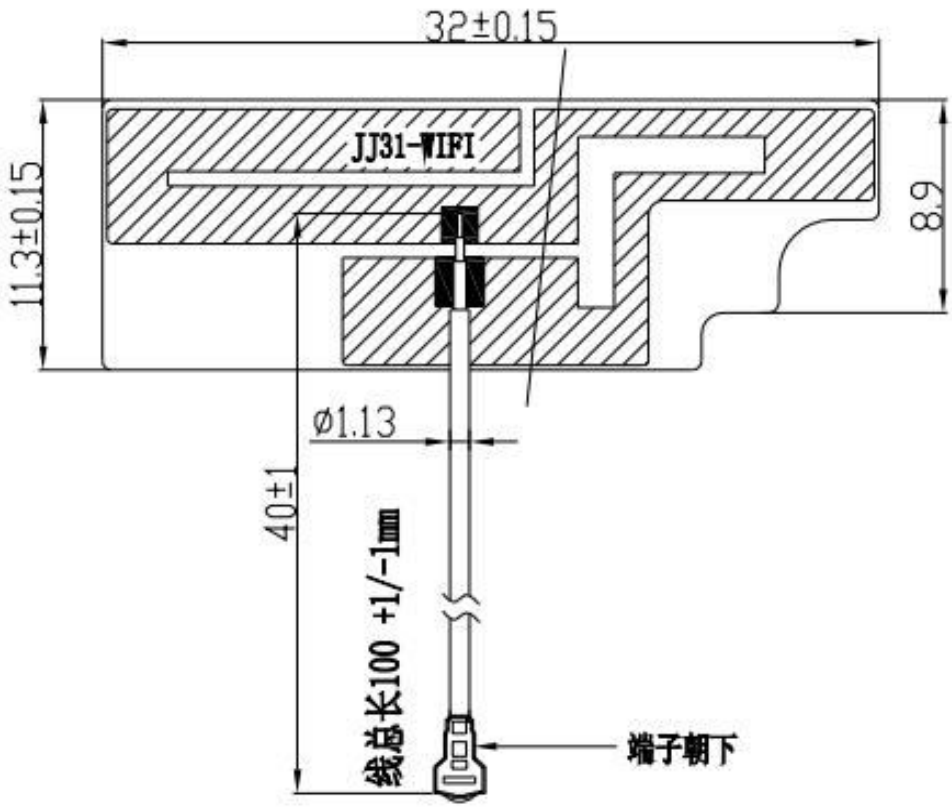

注：

1. 材料:FPC.基材:18/25,表面颜色为哑光黑。
2. 反面整体背胶类型:3M-9471LE。
3. 表面不可以有污染物、擦伤、黑点。
4. 镀镍厚度2~6um，不可有镀镍后易断裂及脱落，导通不良，电路部分断缺等不良现象。
5. 背胶需要够热冲击实验；实验条件：-40~+85摄氏度 16个周期（一周期为30分钟）。
6. 该图为原尺寸比例图，*为重点管控尺寸

注：所有孔均为通孔，红色线为打断线。

GENERAL TOLERANCE TABLE				深圳市勤新科技有限公司					
LINEAR(MM)		ANGULAR							
DIVISION	TOLERANCE	DIVISION	TOLERANCE						
[illegible]	[illegible]	[illegible]	[illegible]	THE MINIMAL CODE		DATA		2020/10/22	
[illegible]	[illegible]	[illegible]	[illegible]	PRODUCT NAME	[illegible]	DESIGN		[illegible]	
[illegible]	[illegible]			PRODUCT NO	[illegible]	VERIFY		[illegible]	
[illegible]	[illegible]			MATERIAL	[illegible]	APPROVE		[illegible]	
OVERLAP	[illegible]			SCALE	1:1	mm	SIZE A4	SHEET	1 of 1

FPC antenna specificati

You can see antenna size is 32mm*11.3mm* From below

Specification.

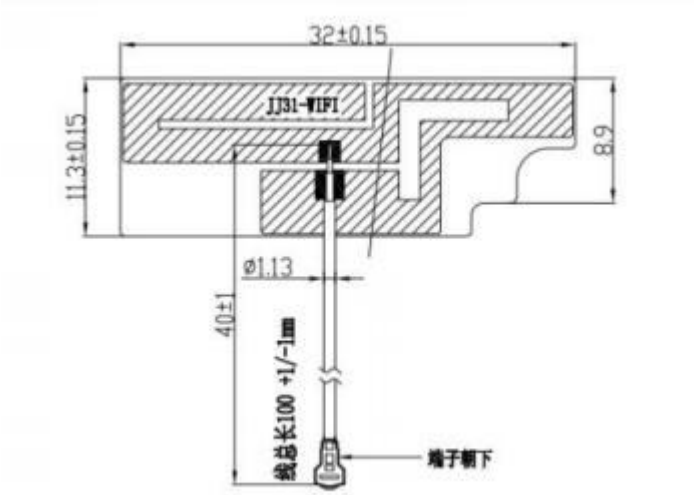

And PCB Pad size for IPEX terminal just follow the below chart.

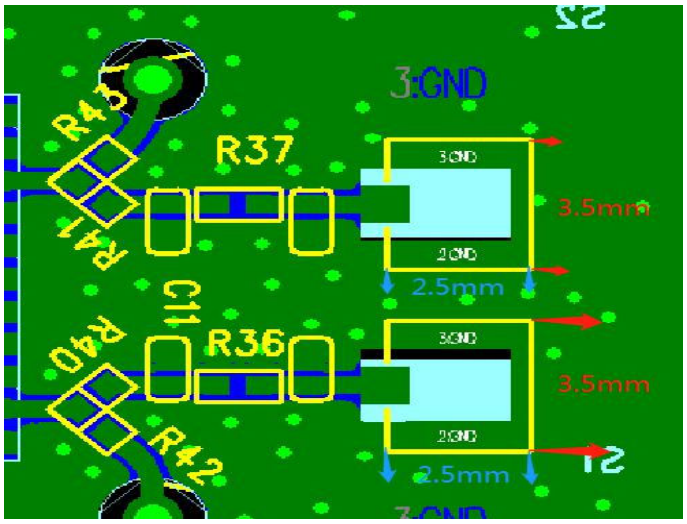

The FPC antenna is connected to the PCB at the position of R43.R44， the RF line （the Line between the FPC antenna and Wifi Module） must be 50ohm。

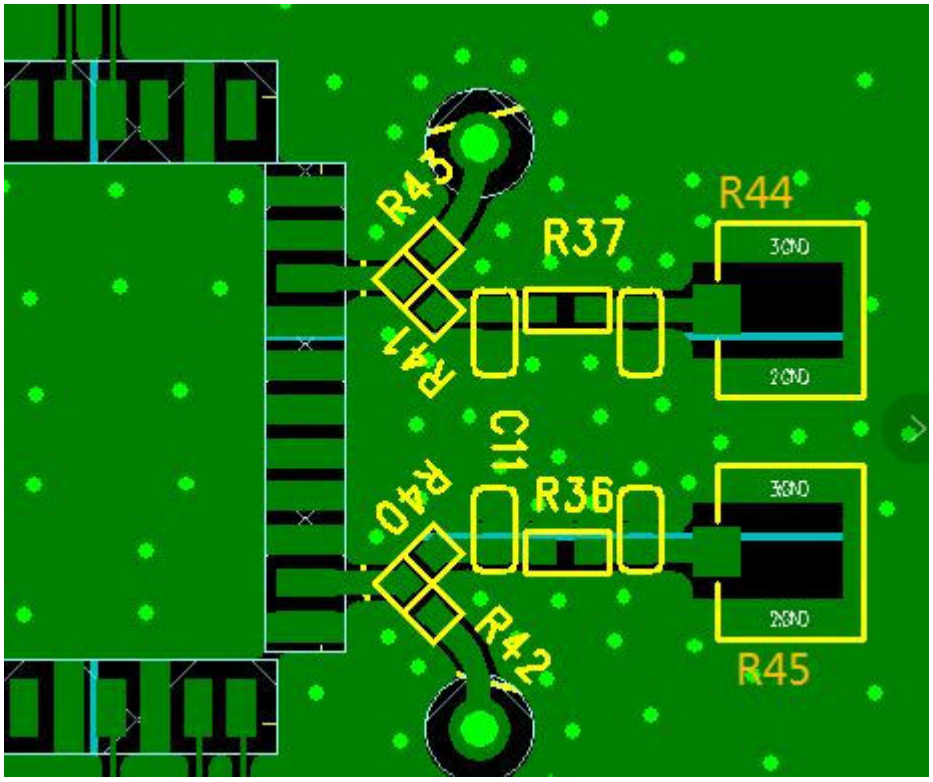

R36	0 ohm
R37	0 ohm
R40	0 ohm
R41	0 ohm
R44	IPEX 2
R45	IPEX 1

FCC Statement
FCC standards: FCC CFR Title 47 Part 15 Subpart C Section 15.247,15.407

Antenna info:
External antenna
Manufacture:HUNAN FN-LINK TECHNOLOGY LIMITED
Model:6222D-UUC
Antenna gain 2.5dBi per antenna
Antenna number:2

This device complies with part 15 of the FCC Rules. Operation is subject to the following two conditions: (1) This device may not cause harmful interference, and (2) this device must accept any interference received, including interference that may cause undesired operation.
Any Changes or modifications not expressly approved by the party responsible for compliance could void the user's authority to operate the equipment.
Note: This equipment has been tested and found to comply with the limits for a Class B digital device, pursuant to part 15 of the FCC Rules. These limits are designed to provide reasonable protection against harmful interference in a residential installation. This equipment generates, uses and can radiate radio frequency energy and, if not installed and used in accordance with the instructions, may cause harmful interference to radio communications. However, there is no guarantee that interference will not occur in a particular installation. If this equipment does cause harmful interference to radio or television reception, which can be determined by turning the equipment off and on, the user is encouraged to try to correct the interference by one or more of the following measures:
—Reorient or relocate the receiving antenna.
—Increase the separation between the equipment and receiver.
—Connect the equipment into an outlet on a circuit different from that to which the receiver is connected.
—Consult the dealer or an experienced radio/TV technician for help.

We will retain control over the final installation of the modular such that compliance of the end product is assured. In such cases, an operating condition on the limit modular approval for the module must be only approved for use when installed in devices produced by a specific manufacturer. If any hardware modify or RF control software modify will be made by host manufacturer,C2PC or new certificate should be apply to get approval,if those change and modification made by host manufacturer not expressly approved by the party responsible for compliance ,then it is illegal.

FCC Radiation Exposure Statement
The modular can be installed or integrated in mobile or fix devices only. This modular cannot be installed in any portable device.
This modular complies with FCC RF radiation exposure limits set forth for an uncontrolled environment. This transmitter must not be co-located or operating in conjunction with any other antenna or transmitter. This modular must be installed and operated with a minimum distance of 20 cm between the radiator and user body.

If the FCC identification number is not visible when the module is installed inside another device, then the outside of the device into which the module is installed must also display a label referring to the enclosed module. This exterior label can use wording such as the following: “Contains Transmitter Module FCC ID: 2AATL-6222D-UUC Or Contains FCC ID: 2AATL-6222D-UUC”
When the module is installed inside another device, the user manual of the host must contain below warning statements;
1. This device complies with Part 15 of the FCC Rules. Operation is subject to the following two conditions:

(1) This device may not cause harmful interference.
(2) This device must accept any interference received, including interference that may cause undesired operation.
Note: This equipment has been tested and found to comply with the limits for a Class B digital device, pursuant to part 15 of the FCC Rules. These limits are designed to provide reasonable protection against harmful interference in a residential installation. This equipment generates, uses and can radiate radio frequency energy and, if not installed and used in accordance with the instructions, may cause harmful interference to radio communications.
However, there is no guarantee that interference will not occur in a particular installation. If this equipment does cause harmful interference to radio or television reception, which can be determined by turning the equipment off and on, the user is encouraged to try to correct the interference by one or more of the following measures:
—Reorient or relocate the receiving antenna.
—Increase the separation between the equipment and receiver.
—Connect the equipment into an outlet on a circuit different from that to which the receiver is connected.
—Consult the dealer or an experienced radio/TV technician for help.

2. Changes or modifications not expressly approved by the party responsible for compliance could void the user's authority to operate the equipment.
The devices must be installed and used in strict accordance with the manufacturer's instructions as described in the user documentation that comes with the product.
Any company of the host device which install this modular with limit modular approval should perform the test of radiated & conducted emission and spurious emission,etc. according to FCC part 15C : 15.247 and 15.407 and 15.209 & 15.207 ,15B Class B requirement, Only if the test result comply with FCC part 15C : 15.247 and 15.407 and 15.209 & 15.207 ,15B Class B requirement， then the host can be sold legally.