JETBLASTER

BC

FOOTWELL SPEAKERS

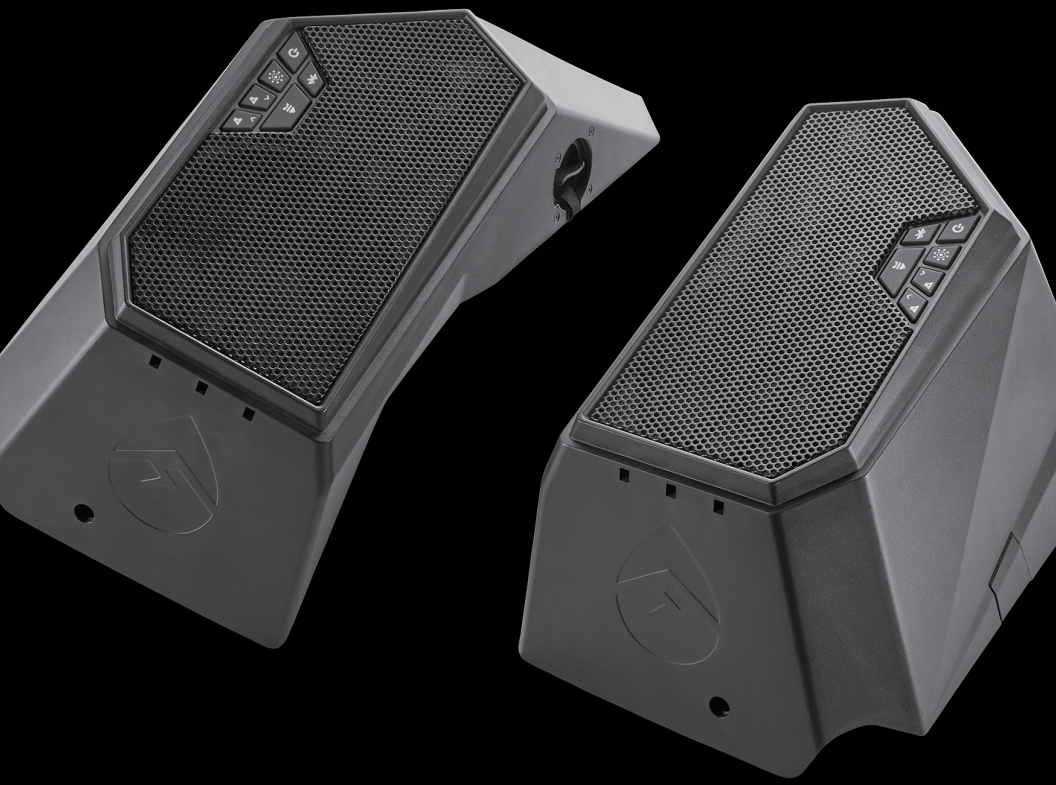

User Guide

Model: GDI-YMHF5P01

Yamaha JetBlaster Speaker

YAMAHA

Revs Your Heart

Overview

Quick Start

1. **Press and hold** the Power Button on top of your speaker to power on one of the two JetBlaster Footwell Speakers.
2. Search your Bluetooth Connection on your Smart Device. Choose **JetBlaster-ECOX** to pair. Select and play your music.
3. Press the EcoCast Button to cycle through to EcoCast Transmitting Mode.
4. **Press and hold** the Power Button on the other speaker. Press the EcoCast Button to cycle through to EcoCast Receiving Mode.
5. The speakers will automatically pair to each other & play music.

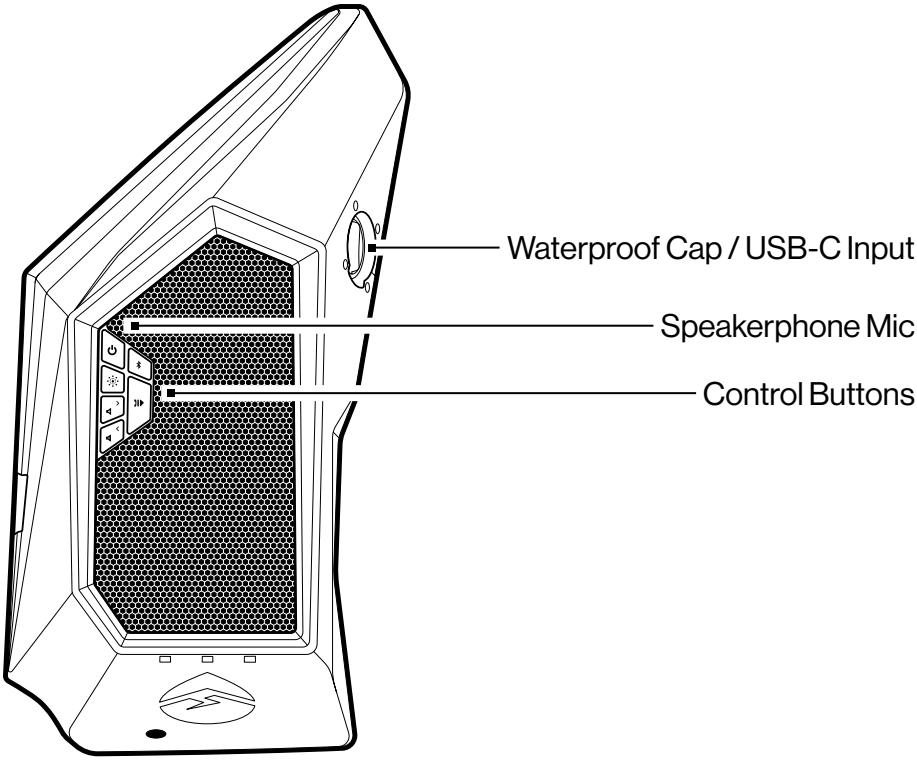

Control Buttons & Operations

Power On/Off: Press and hold ⏻ to power on / off.

Bluetooth: When turned on, the JetBlaster Footwell Speakers will power on and search for your Bluetooth device. Refer to **Audio Set Up** for details.

EcoCast: Press Button to cycle through Speaker Mode, EcoCast Transmitting Mode, and EcoCast Receiving Mode. Refer to **Audio Set Up** and **EcoCast – Additional Speakers** for details.

Speaker Volume: Press or once to decrease or to increase Speaker Volume.

Note: Some Bluetooth devices may require to be manually set for maximum audio level.

Track Selection: Press and hold < to play the previous audio track or > to skip to the next track.

Play/Pause/Answer: Press once to pause or play song tracks.

When receiving an incoming phone call, press once to answer. Press button again to hang up. You can also **press and hold** to reject an incoming call.

Speakerphone Mic: The integrated Speakerphone Mic on the Top Panel allows you to answer mobile calls.

LED Status Indicators

Three of the JetBlaster Footwell Speakers' backlit buttons also serve as Status Indicators: the Power Button ⏻, the Bluetooth Button , and the EcoCast Button .

Battery Level Indicator: The Power Button color indicates the speakers' battery levels:

- Green – 100%-76% charge

- Yellow – 75%-26% charge
- Red – 25%-0% charge

Bluetooth Status Indicator: The Blue Bluetooth Button backlight indicates the following Bluetooth statuses.

- Flashing – Ready to pair
- Solid – Bluetooth connection successful

EcoCast Status Indicator: The EcoCast Button color indicates the following statuses.

- Red – EcoCast Transmitting Mode
  - Flashing – Paring ready
  - Solid – Pairing time-out; pairing not enabled. Please try again.
- Green – EcoCast Receiving Mode
  - Flashing – Paring ready
  - Solid – EcoCast connection successful
- Blue – Speaker Mode; speaker acts as a regular Bluetooth speaker and does not have EcoCast function

Refer to **Charging: USB-C Input**, **Audio Set Up**, and **EcoCast – Additional Speakers** for additional details.

Charge Your JetBlaster Footwell Speakers Prior to First Use

For best performance, fully charge your speakers before you turn them on for the first time. Connect the USB-C port to the USB cable and a 5V power source.

Approximately 12 hours of charging is required from a low to a full charge.

Power source options include the USB connection to your computer or a power outlet using a 5V, 2A USB to AC power adapter. It is recommended to always use the USB cable and power adapter included with your speakers.

Refer to **Charging: USB-C Input** for additional details.

Bluetooth Pairing & Your Audio

Connecting With Bluetooth: Connect Your Smart Device to One of the JetBlaster Footwell Speakers & Play Audio

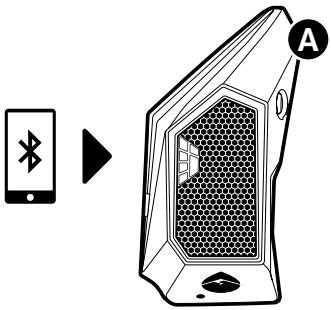

1. Turn on one of the two JetBlaster Footwell Speakers, hereafter referred to as **Speaker A**. The backlit Bluetooth Button ✱ will flash Blue, indicating that it is ready to pair.
2. Turn on Bluetooth on your Bluetooth device (Smart Device) and set the device in pairing mode. Available Bluetooth connections shall appear. Select **JetBlaster-ECOX** speaker from the list of discovered devices on your Bluetooth device. Wait for a few seconds until the connection is completed.

   Note: Bluetooth connection feature is found in the Settings section of most mobile phones and other Bluetooth enabled devices.

3. When the **JetBlaster-ECOX** selection is made and the Bluetooth connection is completed, your JetBlaster Footwell speaker will announce: “Your phone is connected.” The LED Bluetooth Button backlight will shine solid Blue.
4. Once connected to **Speaker A**, you can select and play your desired audio.

Pairing Mode

If the LED is not flashing or if you wish to place your speakers in pairing mode, press and release the Bluetooth Button on the top panel. Your speakers shall announce “Ready to connect” when ready to pair to a new device.

Note: Your JetBlaster Footwell Speakers shall sync & wirelessly pair with most Bluetooth enabled devices. The unit remembers the last device paired and will automatically search for previous connections when the speaker is turned on or when a device comes back into Bluetooth range. If a connection is lost due to range, the speaker will look to re-establish that connection. If Bluetooth is turned off on your Smart Device, the JetBlaster Footwell Speakers may not automatically look for the device.

Recommendation: If you are not familiar with Bluetooth pairing for your Smartphone or other Smart Device, refer to the User Guide for your Smartphone to learn how to add and pair a new device (JetBlaster Footwell Speakers for instance) to your Smartphone using Bluetooth.

Switching Bluetooth Connections

Once paired, should you have an issue switching between Bluetooth connections between devices, open the Bluetooth Section within the device currently connected to the JetBlaster Footwell Speakers and delete the Bluetooth connection. The speakers will then be available to pair and connect to an alternate Bluetooth enabled Smartphone / Audio Device.

Setting Up EcoCast on Your Two Speakers

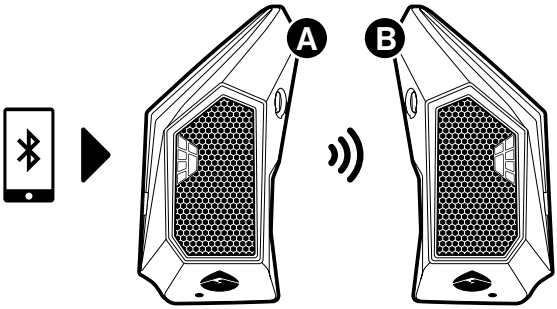

1. Press the EcoCast Button on **Speaker A** to cycle through to and initiate EcoCast Transmitting Mode. The EcoCast backlight will flash Red, and the speaker will announce, “EcoCast transmitting.”

2. Power on your other JetBlaster Footwell Speaker, hereafter referred to as **Speaker B**. Press on **Speaker B** to cycle through to and initiate EcoCast Receiving Mode. The EcoCast backlight will flash Green, and the speaker will announce, “EcoCast receiving.”

3. Once the connection between the speakers is successful, **Speaker B** will announce, “Connection Successful,” and start playing music from your Bluetooth device. The EcoCast backlight will shine solid Red on **Speaker A** and solid Green on **Speaker B**.

Power On Auto-Pairing

If your phone has previously been paired with one speaker, please follow these steps for your next use.

1. Turn on one JetBlaster Footwell Speaker. The speaker will announce, “Ready to Connect.”

2. Turn on the other JetBlaster Footwell Speaker.

3. The two speakers will automatically pair to each other and reconnect to your phone.

IMPORTANT: Installing the JetBlaster Footwell Speaker Mounts

In order to attach the JetBlaster Footwell Speakers, we recommend that you have a licensed Yamaha dealer install the JetBlaster Mounts and Speakers onto your personal watercraft.

Note: See separate Yamaha installation instructions for proper mounting bracket and speaker installation.

Attaching the JetBlaster Footwell Speakers onto Your Mounts

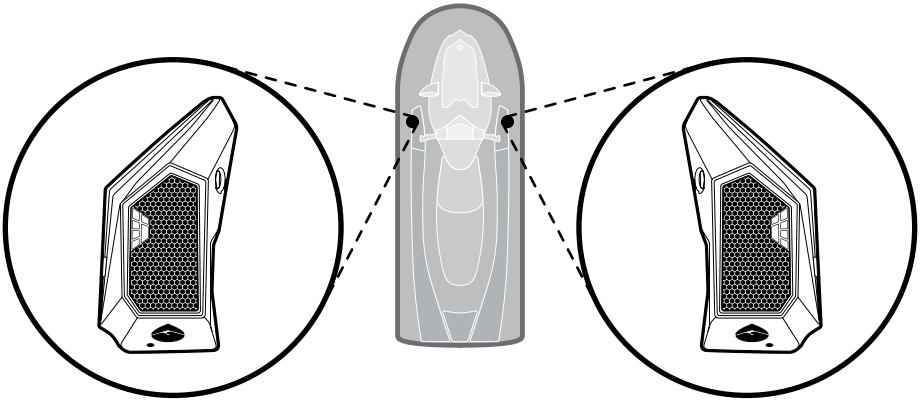

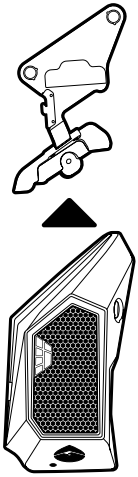

The JetBlaster Footwell Speakers have been specifically designed to fit into the footwell area of the Yamaha JetBlaster WaveRunner.

Once, as recommended, the mounts have been installed by a licensed Yamaha dealer, slide the left and right speakers forward towards the front of the vehicle (bow) into their respective mounts. When each speaker slides in, the spring-loaded Release Button will be pushed out and spring back into place. Do not stop sliding each speaker until the button returns to its locked position.

IMPORTANT: Mounting Safety

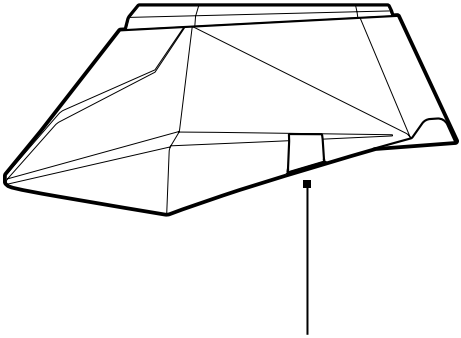

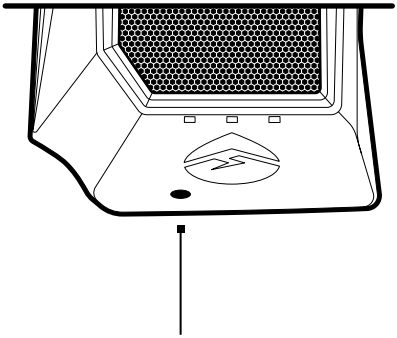

Although the Release Button holds each speaker in place, the speakers **MUST** be locked into the mount with the Security Bolt for moderate to extreme riding conditions.

When riding in moderate to extreme conditions, **ALWAYS** check and tighten the supplied Security Bolt on each speaker.

Removing Your Speakers from Your Mounts

To remove each JetBlaster Footwell Speaker from their respective mount, follow these steps:

1. Unscrew the security bolt, if it is installed.
2. While pressing the Release Button, pull the speaker backwards towards the rear (stern) of the vehicle.

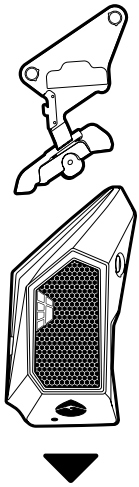

Charging: USB-C Input

IMPORTANT: Maintaining Waterproofness

If the cap on the side panel is not properly closed, the unit is **NOT** watertight.

To ensure the unit is watertight & waterproof, **ALWAYS CLOSE THE CAP PROPERLY**. To do so, turn the cap all the way to the **RIGHT** (clockwise).

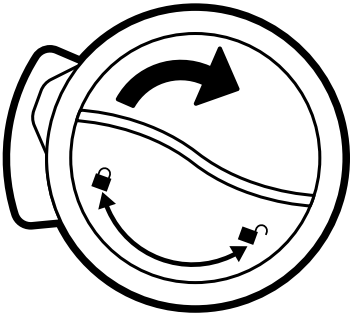

Please inspect the rubber o-ring on the cap to ensure that it is clean and free of cracks or damages. If the o-ring is damaged or dirty, the cap will **NOT** create a watertight seal.

Charging Your Speakers

When the speakers drop below a 25% battery level, each speaker will repeat a low-battery warning three times: the Power Button ⏻ on each speaker will flash Red and the speakers will announce, “Battery low.” Then, the Power Buttons will flash Red, once every 5 minutes.

To access the connections, turn the waterproof caps to the **LEFT** (counterclockwise).

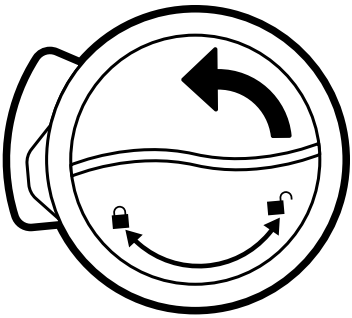

Connect the USB cable to the USB-C Input to charge your JetBlaster Footwell speakers.

Battery Level Indicator

The backlit Power Button ⏻ indicates USB connection Charging Status.

- Flashing Red – Charged 0%-25%
- Flashing Yellow – Charged 26%-75%
- Flashing Green – Charged 76%-99%
- Solid Green – Full charge complete

Recommendation: Use the USB cable and power adapter included in the box.

Note: Charge time from low to full charge is approximately 12 hours.

Your speakers can be charged while playing audio.

CAUTION: Do **NOT** charge if unit and/or connections are wet or damp.

EcoCast – Additional Speakers

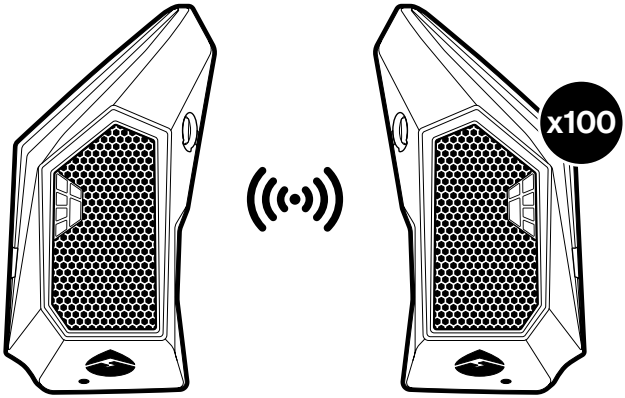

When you have more than two JetBlaster Footwell Speakers, you can build a broadcast system by initiating EcoCast Transmitting Mode in one JetBlaster Footwell Speaker and broadcasting your music to one or more JetBlaster Footwell Speakers in EcoCast Receiving Mode.

EcoCast: Additional Receiving Speakers

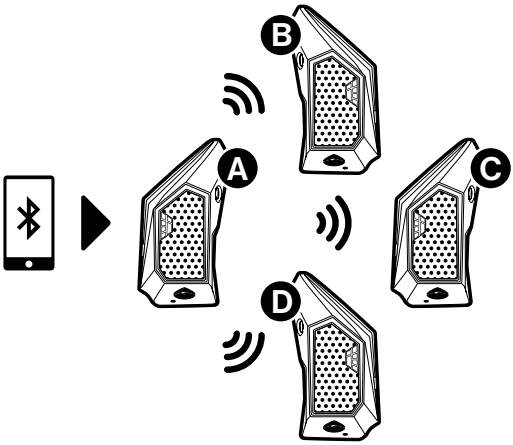

1. Follow **Audio Set Up** part to pair your Bluetooth device to **Speaker A** and connect **Speaker A** and **Speaker B**.

2. On **Speaker A** (the speaker with the EcoCast LED Indicator shining solid Red), **press and hold** for 6 seconds. The EcoCast backlight will flash Red.

3. Power on the additional JetBlaster Footwell Speaker(s) (**Speaker C** and **Speaker D**). Press to cycle through to and initiate EcoCast Receiving Mode. The EcoCast backlight will flash Green, and the speaker(s) will announce, "EcoCast receiving."

4. Once the connection between the speakers is successful, **Speaker C** (and **Speaker D**) will announce, "Connection Successful," and start playing music from your Bluetooth device. The EcoCast backlight will shine solid Green on both speakers.

Notes:

- If all the speakers are turned off, then turned on, the speaker(s) in EcoCast Receiving Mode (**Speakers B**, **C**, and **D**) will automatically re-connect to the speaker in Transmitting Mode (**Speaker A**). If they are not automatically re-connected, please follow the above steps.
- You can also pair the JetBlaster Footwell Speakers with any other ECOXGEAR or SoundExtreme speaker bearing the EcoCast symbol .
- The EcoCast functionality is only available at a maximum range of 30 feet between speakers.
- While connecting the JetBlaster Footwell Speakers, make sure that the speakers are within a few feet of each other.
- The EcoCast feature should **NOT** be used to connect to speakers in other vehicles while riding. We recommend safely sharing your music with friends while you are relaxing in the cove, on the sandbar, or in the marina.

Specifications

Unit Dimensions

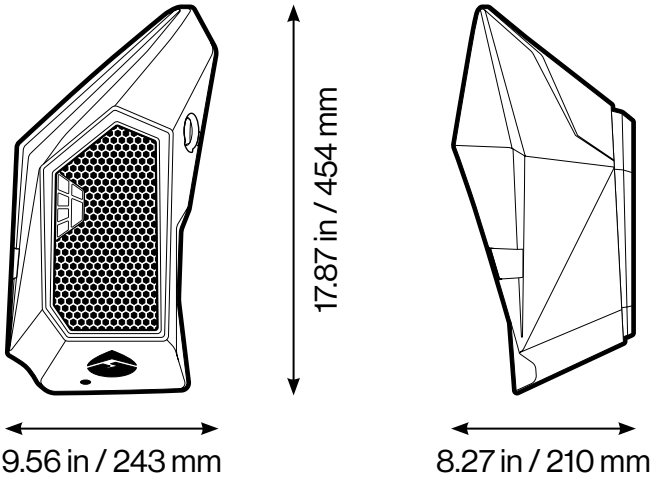

Unit Weight (Single Speaker and Mount)
9.3 lbs (4.2kg)

System Output Power
130W (65W x2) Peak

S/N Ratio
88dB +/- 3dB

Power Source
14.8V, 5200mAh
Lithium Ion Battery

USB Input
5V, 2A

Frequency Range
50Hz-20,000Hz

Bluetooth
Bluetooth® 5.1
Up to 100 ft / 30 m

Play Time
Up to 50 hours at 50% volume level;
up to 10 hours at 75% volume level

EcoCast Range
30 ft / 9.1 m between Casting speaker and Receiving speakers

Charging Options
USB to 5V, 2A AC adapter or Computer

Charging Time
Approximately 12 hours

Recommended Storage (Battery) Temperature
59°F / 15°C

Operating Temperature
23°F to 104°F / -5°C to 40°C

Waterproof/Dustproof Rating
IP67

FCC STATEMENT:

This device complies with Part 15 of the FCC Rules. Operation is subject to the following two conditions:

1.) This device may not cause harmful interference, and

2.) This device must accept any interference received, including interference that may cause undesired operation.

WARNING: Changes or modifications not expressly approved by the party responsible for compliance could void the user's authority to operate the equipment.

NOTE: This equipment has been tested and found to comply with the limits for a Class B digital device, pursuant to Part 15 of the FCC Rules. These limits are designed to provide reasonable protection against harmful interference in a residential installation. This equipment generates, uses, and can radiate radio frequency energy and, if not installed and used in accordance with the instructions, may cause harmful interference to radio communications. However, there is no guarantee that interference will not occur in a particular installation. If this equipment does cause harmful interference to radio or television reception, which can be determined by turning the equipment off and on, the user is encouraged to try to correct the interference by one or more of the following measures: reorient or relocate the receiving antenna, increase the separation between the equipment and receiver, connect the equipment into an outlet on a circuit different from that to which the receiver is connected, consult the dealer or an experienced radio/TV technician for help.

RF WARNING STATEMENT:

The device has been evaluated to meet general RF exposure requirement. The device can be used in portable exposure condition without restriction.

ISED Statement

English:This device contains licence-exempt transmitter(s)/receiver(s) that comply with Innovation, Science and Economic Development Canada's licence-exempt RSS(s). Operation is subject to the following two conditions:
(1) This device may not cause interference.
(2) This device must accept any interference, including interference that may cause undesired operation of the device.
The digital apparatus complies with Canadian CAN ICES-3 (B)/NMB-3(B).
French: Cet appareil contient des émetteurs/récepteurs exempts de licence qui sont conformes aux RSS exemptés de licence d'Innovation, Sciences et Développement économique Canada.
L'exploitation est soumise aux deux conditions suivantes :
(1) Cet appareil ne doit pas provoquer d'interférences.
(2) Cet appareil doit accepter toute interférence, y compris les interférences susceptibles de provoquer un fonctionnement indésirable de l'appareil.
l'appareil numérique du ciem conforme canadien peut - 3 (b) / nmb - 3 (b).
This device meets the exemption from the routine evaluation limits in section 2.5 of RSS 102 and compliance with RSS 102 RF exposure, users can obtain Canadian information on RF exposure and compliance.
cet appareil est conforme à l'exemption des limites d'évaluation courante dans la section 2.5 du cnr - 102 et conformité avec rss 102 de l'exposition aux rf, les utilisateurs peuvent obtenir des données canadiennes sur l'exposition aux champs rf et la conformité.
This equipment complies with Canada radiation exposure limits set forth for an uncontrolled environment.
Cet équipement est conforme aux limites d'exposition aux rayonnements du Canada établies pour un environnement non contrôlé.
RF Exposure Statement
This equipment should be installed and operated with minimum distance 0cm between the radiator & your body.
Cet équipement doit être installé et utilisé à une distance minimale de 0 cm entre le radiateur et votre corps.

PRODUCT USE AND PROTECTION:

Read and follow all instructions. Use only as intended.

The ECOXGEAR Bluetooth speaker is intended to be used indoors or outdoors and in land or water environments. The speaker has been tested to IP67 waterproofing standards, which means the speaker can be submerged in up to 3 feet of water for 30 minutes without any damage. However, the speaker is **NOT** intended for constant underwater use.

Always make sure the cap(s) / cover(s) are clean, free from sand or debris, and correctly fitted. The speaker will only meet IP67 ratings if all rubber seals, gasket(s) and cover(s) / cap(s) are in place. If you notice a muffling of audio after submersion, gently shake the unit to clear excess water. If your speaker is exposed to salt water, clean it thoroughly after use with fresh water.

The power cable and the unit with an improperly fitted cap are **NOT** waterproof.

To prevent fire or shock, do **NOT** attempt to charge this unit if it is wet or you suspect water has entered the unit. In this situation, please return the unit to Grace Digital for a free assessment. If we have found that the unit has carried water, we will repair or replace the unit free of charge.

SAFETY ADVISORY & WARNING:

Read and follow all instructions. Use only as intended.

CAUTION: Do **NOT** open to repair. A qualified technician must carry out repair work.

ATTENTION: Do **NOT** charge while the unit is wet. Towel dry the unit **AND** make sure all connections are dry **BEFORE** plugging in the charging connector. Failure to do so may result in electrical damage to the unit and may void the warranty.

⚠ **WARNING:** Cancer and Reproductive Harm - www.P65Warnings.ca.gov

WARNING: JetBlaster Footwell Speakers have a built-in Lithium battery. The battery must **NOT** be used in or near an open heat source or excessive heat.

WARNING: Danger of explosion if battery is incorrectly replaced.

CAUTION: The unit can be used with the main power cord disconnected, the unit is readily operable with the main power cord disconnected.

ATTENTION: Do **NOT** dispose of in a landfill. Contact Grace Digital at www.gracesupport.com or a certified recycling agent to dispose of the unit.

FCC STATEMENT:

This device complies with Part 15 of the FCC Rules. Operation is subject to the following two conditions:

1.) This device may not cause harmful interference, and

2.) This device must accept any interference received, including interference that may cause undesired operation.

WARNING: Changes or modifications not expressly approved by the party responsible for compliance could void the user's authority to operate the equipment.

NOTE: This equipment has been tested and found to comply with the limits for a Class B digital device, pursuant to Part 15 of the FCC Rules. These limits are designed to provide reasonable protection against harmful interference in a residential installation. This equipment generates, uses, and can radiate radio frequency energy and, if not installed and used in accordance with the instructions, may cause harmful interference to radio communications. However, there is no guarantee that interference will not occur in a particular installation. If this equipment does cause harmful interference to radio or television reception, which can be determined by turning the equipment off and on, the user is encouraged to try to correct the interference by one or more of the following measures: reorient or relocate the receiving antenna, increase the separation between the equipment and receiver, connect the equipment into an outlet on a circuit different from that to which the receiver is connected, consult the dealer or an experienced radio/TV technician for help.

RF WARNING STATEMENT:

The device has been evaluated to meet general RF exposure requirement. The device can be used in portable exposure condition without restriction.

IC STATEMENT:

This device complies with Industry Canada licence-exempt RSS standard(s). Operation is subject to the following two conditions:

1.) This device may not cause interference, and

2.) This device must accept any interference, including interference that may cause undesired operation of the device.

IC ID: 11210A-GDIEXDFNR01

ATTENTION: AC adapter is a device forming a part of the main plug; therefore, an AC adapter can always be readily disconnected from AC socket-outlet.

ATTENTION: Please be sure to follow all state and local boating guidelines and regulations at all times. The EcoCast feature should not be used to connect to speakers in other vehicles while the WaveRunner is being ridden. Remember to always keep a safe distance between yourself and other watercraft vehicles in the area.

Important Legal Information

SAFETY:

This product has a limited life span of use and should be replaced when it shows obvious signs of wear.

Do not modify or remove any original component parts of the speaker. Doing so could cause damage to the unit, allowing water to ingress. A unit with water ingress should not be charged due to potential risk of fire or shock.

Do not attempt to mount the unit except with the approved ECOXGEAR mounts. Doing so could cause damage to the unit allowing water to ingress. A unit with water ingress should not be charged due to potential risk of fire or shock.

Please exercise care and good judgment when using your ECOXGEAR speaker. Audio levels should be appropriate to your environment, comply with all local regulations, and always ensure that you can hear and be aware of any potential hazards around you.

You should always

1.) Use the ECOXGEAR speaker in accordance with any music or noise rules and regulations.

2.) Use the proper ECOXGEAR mounts if you intend to mount the unit.

3.) Properly seal the ECOXGEAR prior and after each use when in humid or water environments to avoid water damage to the internal components. Salt water / air is particularly corrosive. Always make sure that the gaskets are sealed when in a salt water environment and that the unit is properly rinsed off after use.

4.) Properly clean the ECOXGEAR and ensure the gaskets have no sand, dirt, or water on them prior to storage.

5.) Store your unit with all caps properly sealed to avoid long term internal moisture damage inside your unit.

6.) Completely dry and clean your ECOXGEAR prior to attempting to charge the unit.

7.) Return the ECOXGEAR to Grace Digital if you suspect water ingress into the unit or if the unit has experienced a severe impact that may have affected the integrity of the unit to take on water.

You should never

1.) Never charge your ECOXGEAR if you suspect water has entered the device. Charging a device with water inside could be potentially hazardous and cause fire or a spark.

2.) Never use your ECOXGEAR if you have dropped it or thrown it against a hard surface which may have destroyed the integrity of the speaker, housing, or gaskets. In the event of a severe impact to your unit, please return the unit to Grace Digital to review for potential damage.

3.) Never open the USB-C doors in a water environment. This could cause water to ingress into the unit which could potentially be hazardous and cause a fire or a spark.

4.) Never connect a device to the USB-C input jacks when in a water environment. The USB-C jacks should only be used in a dry environment.

5.) Never attempt to fix, repair your ECOXGEAR unit. Please send it back to Grace Digital for any assessments and repairs.

CARE, MAINTENANCE & PRECAUTIONS:

1.) The unit is waterproof only when the cap is properly closed.

2.) Close the cap properly before use. If the unit is placed in water without the cap properly closed, water may enter into the unit and void your warranty.

3.) Dry unit completely before opening the cap. Do **NOT** open the cap if wet or in a wet environment.

4.) Do **NOT** apply excessive force to any surfaces of the unit when wet or in a wet environment.

5.) Do **NOT** use or store the unit in places with high temperature.

6.) **AVOID** prolonged exposure to ultraviolet radiation (UV sunlight) and strong magnetic fields.

7.) Periodically check the rubber seal on the cap for premature wear.

8.) Periodically clean the rubber with a soft moist cloth and ensure no objects such as dirt, hair, sand are on the rubber seal ring. Do **NOT** use any oily solvent or chemicals for cleaning.

9.) Rinse off the unit with tap water after use in salt water or swimming pool.

10.) Power and / or charge the built-in rechargeable battery for portable use by connecting the USB cord to a computer USB connection or to an AC outlet using the AC-to-USB cord 5V, 1A power adapter intended for use with the unit.

11.) Noise and audio distortion may occur when the batteries are nearing end of charge.

12.) Do **NOT** remove the built-in battery. Do **NOT** remove the grille covers.

LIMITED MANUFACTURER'S WARRANTY:

The JetBlaster Footwell Speakers are covered by a 1-year limited warranty that covers defects in workmanship and / or materials for a period of 1 year from original purchase date with the exception of the unit's battery. The unit's battery is covered by a conditional 6-month warranty.

This warranty does not apply to any products which have been abused, neglected, modified or used for a purpose other than the one for which they were manufactured. Please refer to the above care and maintenance instructions for suggested care details. The warranty is valid only for the original owner who purchases the unit from an authorized dealer. Transfers do not qualify for warranty protection. Grace Digital reserves the right to replace any out-of-stock or discontinued product with a comparable product. Discontinued products may not be available for warranty replacement. Any contents are **NOT** covered by the limited manufacturer's warranty. Warranty terms may be revised without notification at the discretion of the manufacturer. Please visit www.ecoxgear.com for additional product & warranty information.

JetBlaster Footwell Speakers by ECOXGEAR, a division of Grace Digital Inc., San Diego, California.
Designed and engineered in the USA. Made in China.

Patents Pending.

YAMAHA
GENUINE
Parts & Accessories

⚠ WARNING:

Please read and understand these instructions completely before installation to avoid possible injury, or damage to the accessory or vehicle.

NOTICES:

This installation should be performed by an authorized Yamaha dealer or other qualified technician.

WARRANTY INFORMATION:
In the United States, see your Yamaha dealer for a copy of the Genuine Yamaha Accessories Limited Warranty statement.

DEALER OR INSTALLER:
These instructions contain important information for future reference and must be given to the customer.

YAMAHA

YAMAHA

What's in the Box

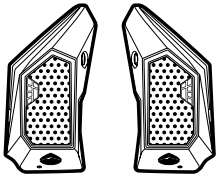

(2x) JetBlaster
Footwell Speakers

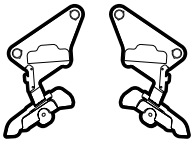

(2x) JetBlaster
Footwell Mounts

(2x) Mounting Bolts
M6-1.0 x 35mm Long

(2x) M6 Locknuts

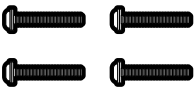

(4x) Mounting Bolts
M6-1.0 x 50mm Long

(2x) Rubber Washers

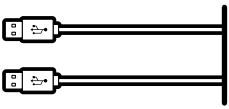

(2x) USB Cables

(2x) Washers

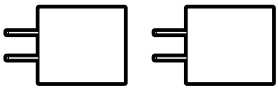

(2x) AC Power Adapters

Hex Key

V08.24

AUDIO BY
ECOXGEAR