418MHz Antenna

RF Engineer：牟振韬

Version：V1.1

Date：2018.06.02

1 Feature

* internal monopole antenna;
* frequency:417MHz-419MHz;
* Through-hole interface;
* wireless communication;

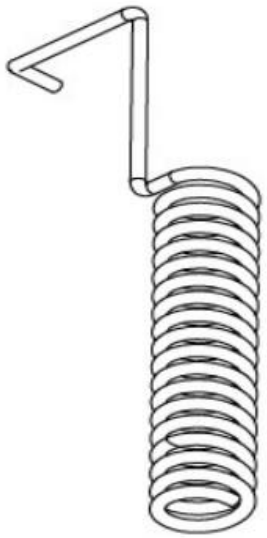

2 Real Electromagnetic Environment

* The ground of RF module in the transmitters is discrete with the ground of the whole PCB. It will affect 418MHz antenna.

* It has no clear area for the 418MHz antenna.

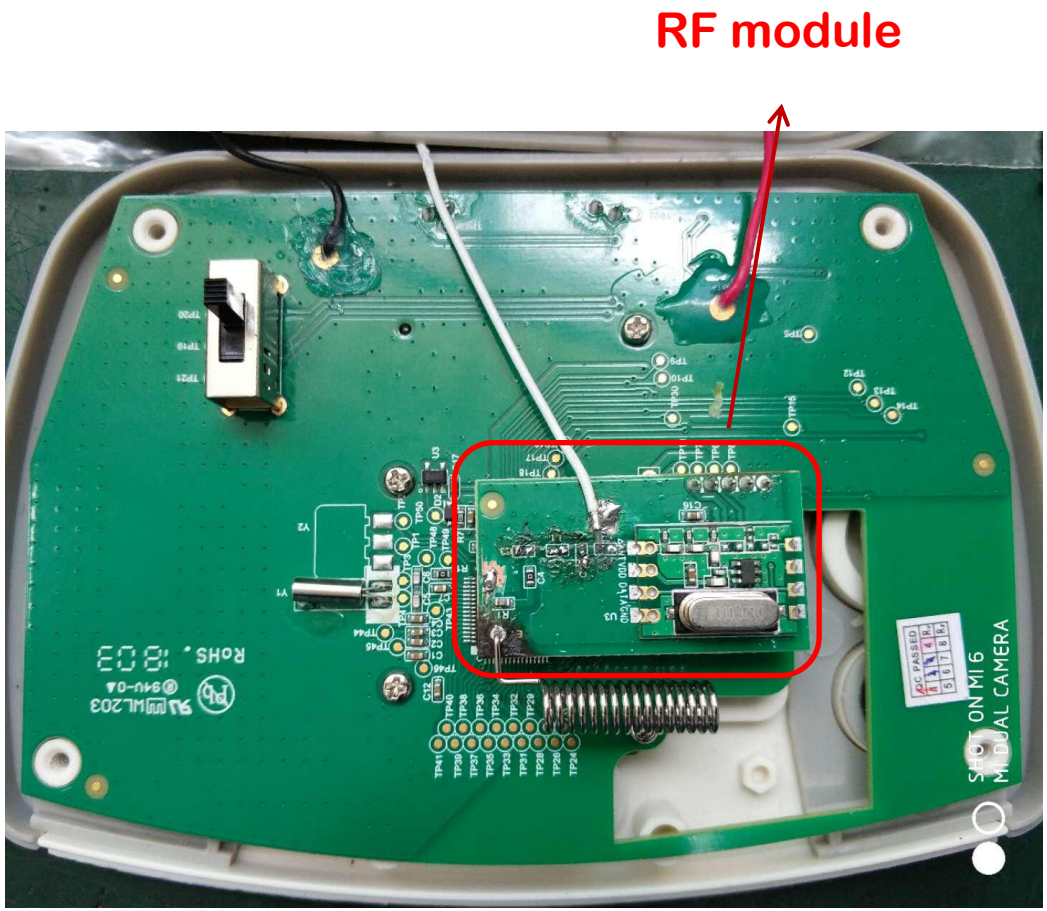

* The ground of RF module in the receviers is also discrete with the ground of the whole PCB. It will affect 418MHz antenna.

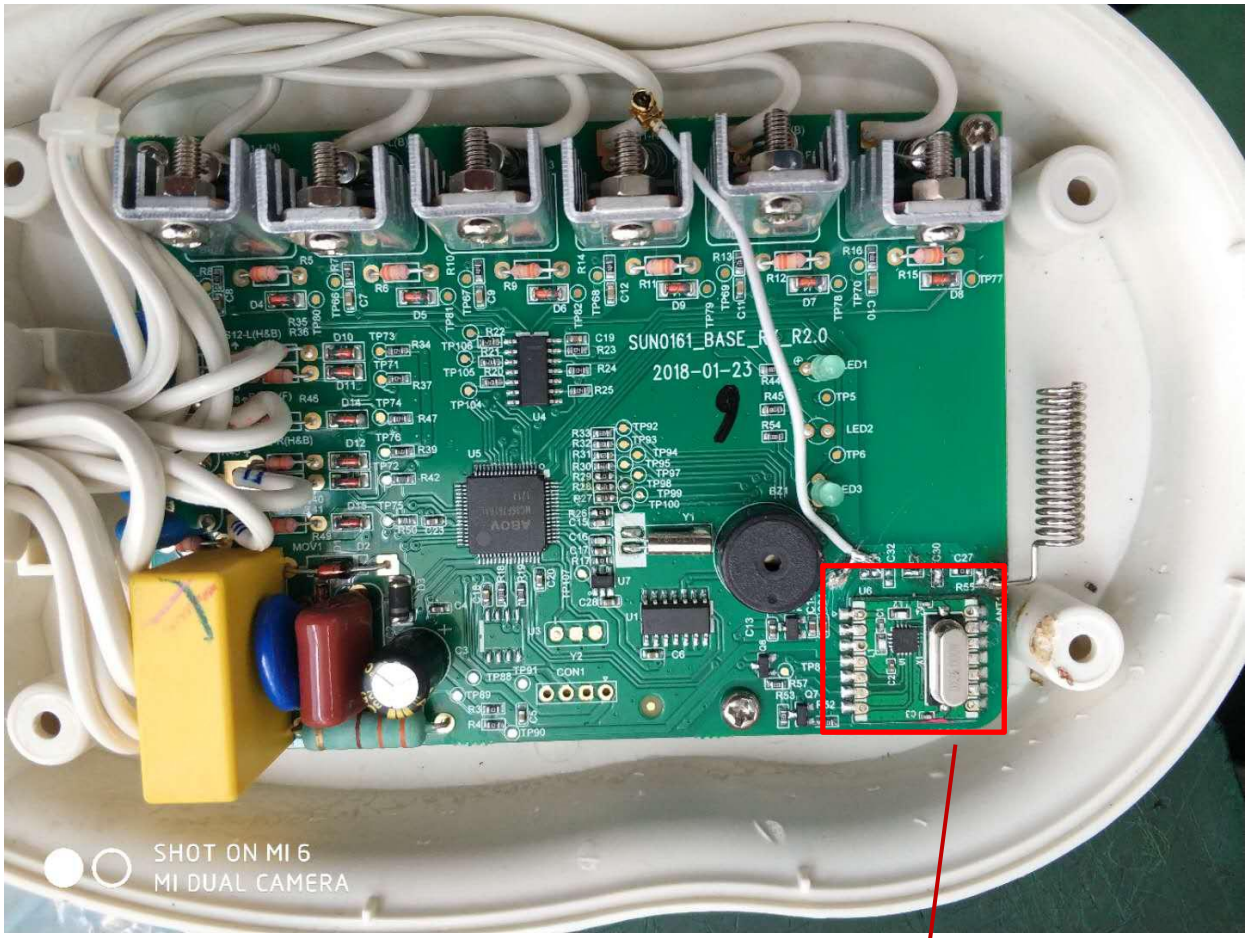

RF module

3 Matching Circuit

*As each internal environment is different, we should add some different elements to make the antenna independace approach 50Ω.

***Transmitters**

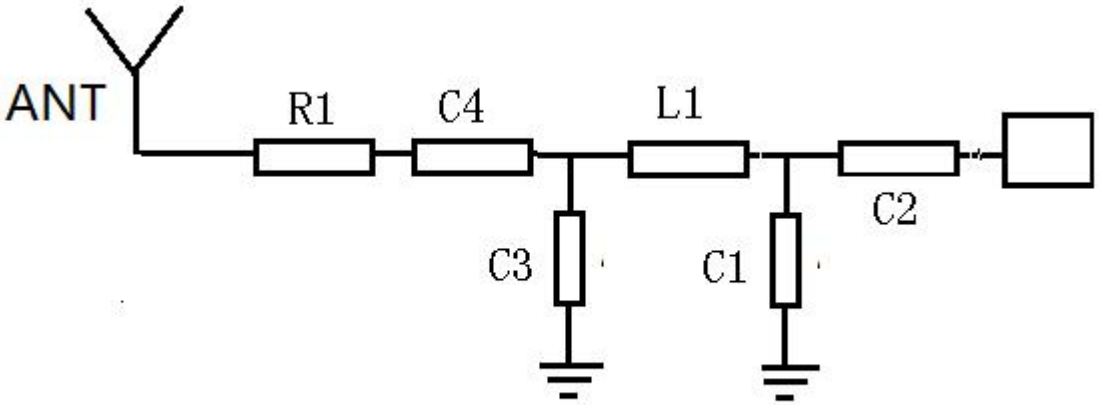

Element	Value
R1(0402)	0Ω
C4(0402)	0Ω
C3(0402)	N/A
L1(0402)	0Ω
C1(0402)	10nH
C2(0402)	0Ω

*Receivers

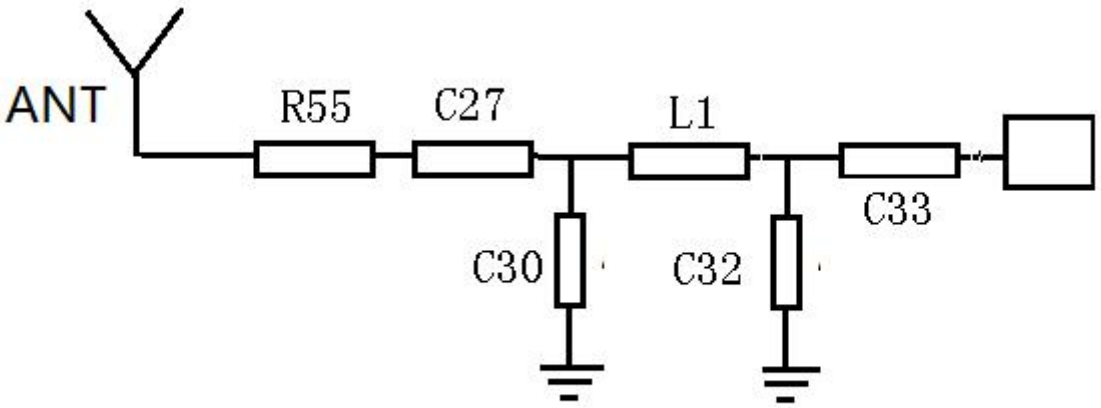

Element	Value
R55(0402)	0Ω
C27(0402)	0Ω
C30(0402)	27nH
L1(0402)	2.7pF
C32(0402)	N/A
C33(0402)	0Ω

4 General parameters

*Transmitters

Product Name	418MHz Antenna
Frequency	417-419MHz
V.S.W.R(Center)	≤2
Peak Gain	‘-9dBi — -8dBi
Polarization	Vertical
Storage Temp	-40℃—80℃
Operating Temperature	-10℃—60℃
Impedance with matching	50Ω
Weight	0.12g
Antenna Type	Monopole

*Receivers

Product Name	418MHz Antenna
Frequency	417-419MHz
V.S.W.R(Center)	≤2
Gain	‘-4dBi — -3dBi
Polarization	Vertical
Storage Temp	-40℃—80℃
Operating Temperature	-10℃—60℃
Impedance with matching	50Ω
Weight	0.12g
Antenna Type	Monopole

4 VSWR

*Transmitters

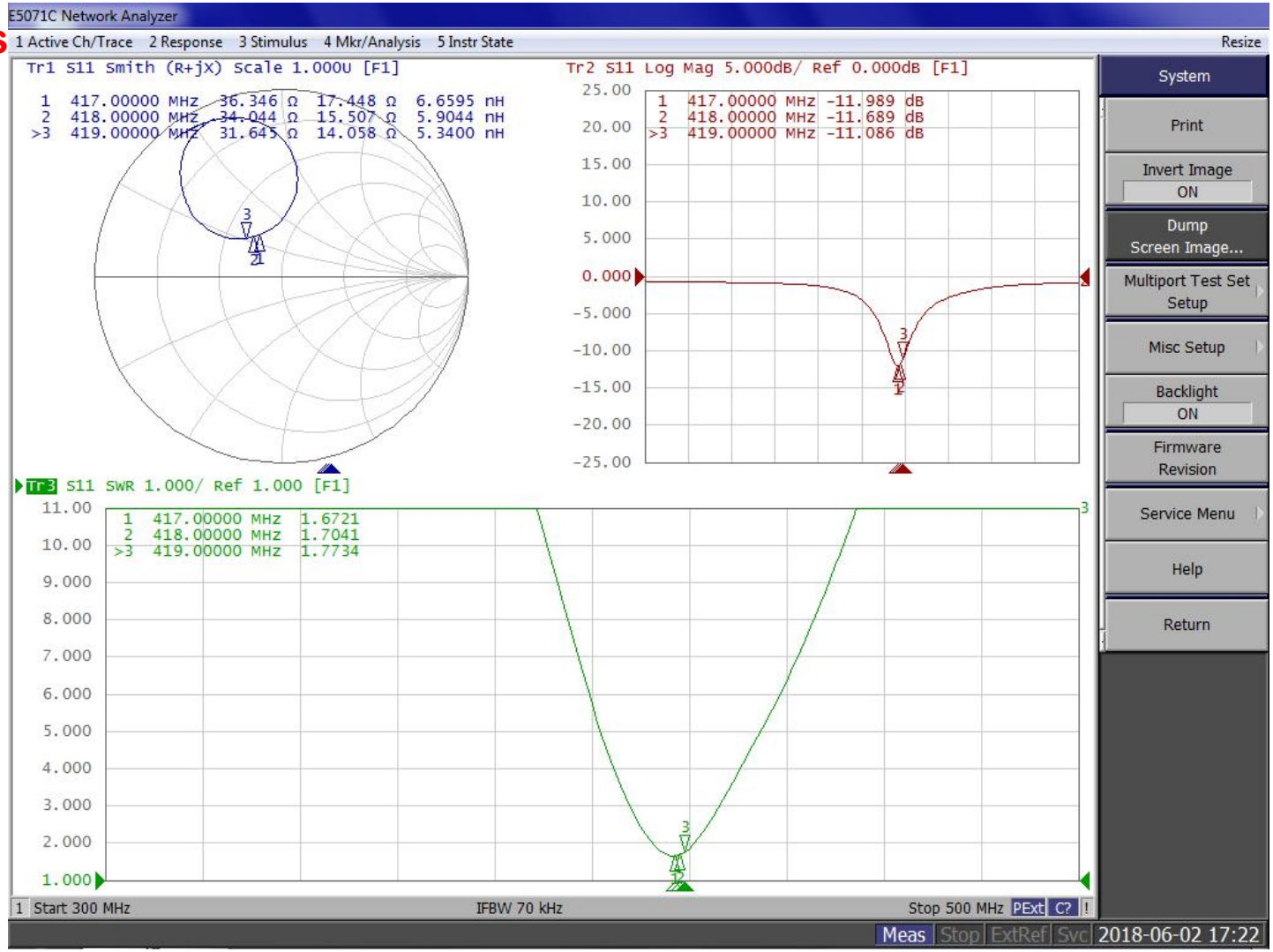

*Receivers

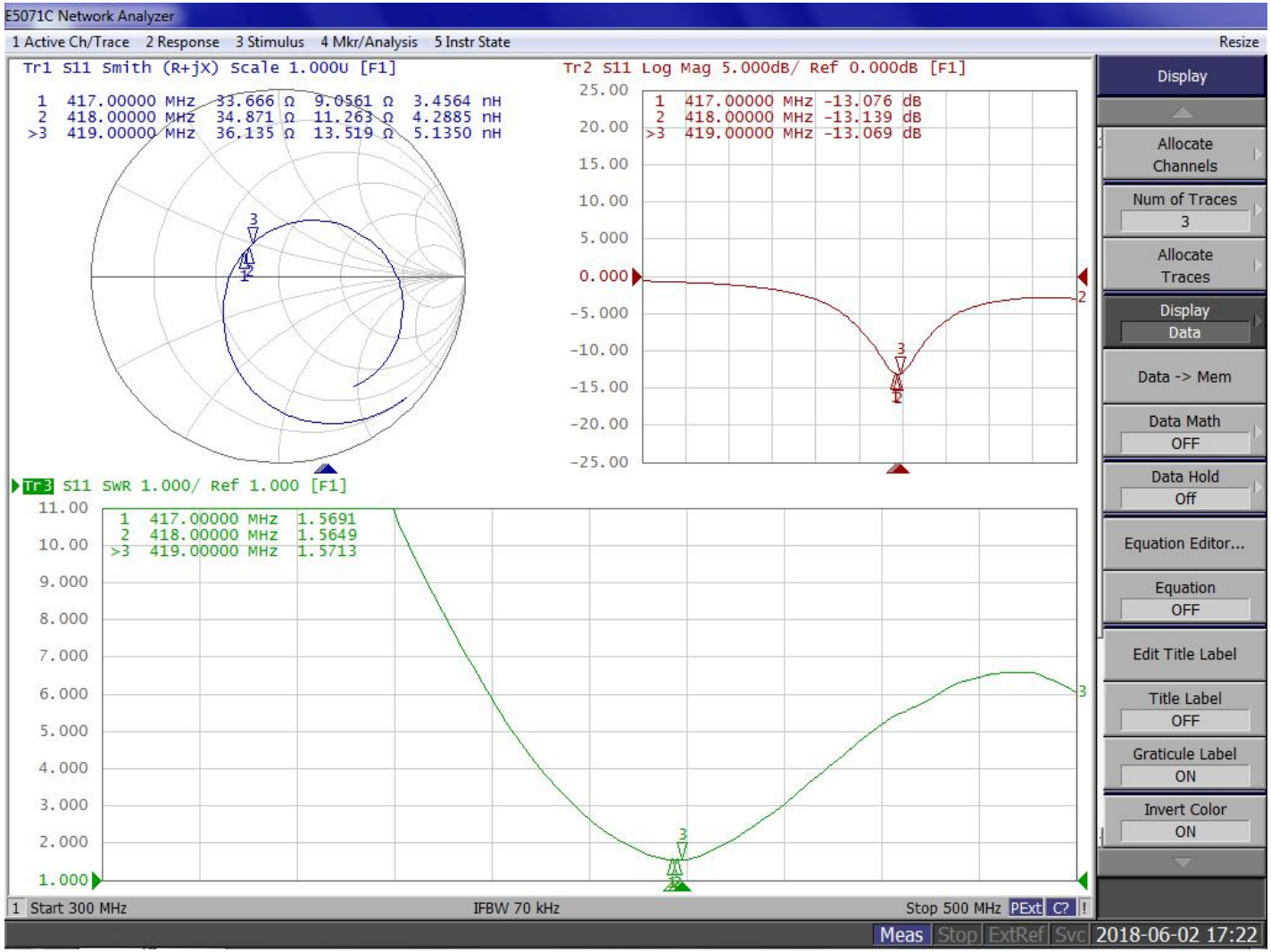
E5071C Network Analyzer
1 Active Ch/Trace 2 Response 3 Stimulus 4 Mkr/Analysis 5 Instr State
Resize
Tr1 S11 Smith (R+jX) Scale 1.000U [F1]
1 417.00000 MHz 33.666 Ω 9.0561 Ω 3.4564 nH
2 418.00000 MHz 34.871 Ω 11.263 Ω 4.2885 nH
>3 419.00000 MHz 36.135 Ω 13.519 Ω 5.1350 nH
Tr2 S11 Log Mag 5.000dB/ Ref 0.000dB [F1]
1 417.00000 MHz -13.076 dB
2 418.00000 MHz -13.139 dB
>3 419.00000 MHz -13.069 dB
25.00
20.00
15.00
10.00
5.000
0.000
-5.000
-10.00
-15.00
-20.00
-25.00
Tr3 S11 SWR 1.000/ Ref 1.000 [F1]
1 417.00000 MHz 1.5691
2 418.00000 MHz 1.5649
>3 419.00000 MHz 1.5713
11.00
10.00
9.000
8.000
7.000
6.000
5.000
4.000
3.000
2.000
1.000
Display
Allocate Channels
Num of Traces
3
Allocate Traces
Display
Data
Data -> Mem
Data Math
OFF
Data Hold
Off
Equation Editor...
Equation
OFF
Edit Title Label
Title Label
OFF
Graticule Label
ON
Invert Color
ON
1 Start 300 MHz
IFBW 70 kHz
Stop 500 MHz
PExt C? !
Meas Stop ExtRef Svc 2018-06-02 17:22

5 Dimension

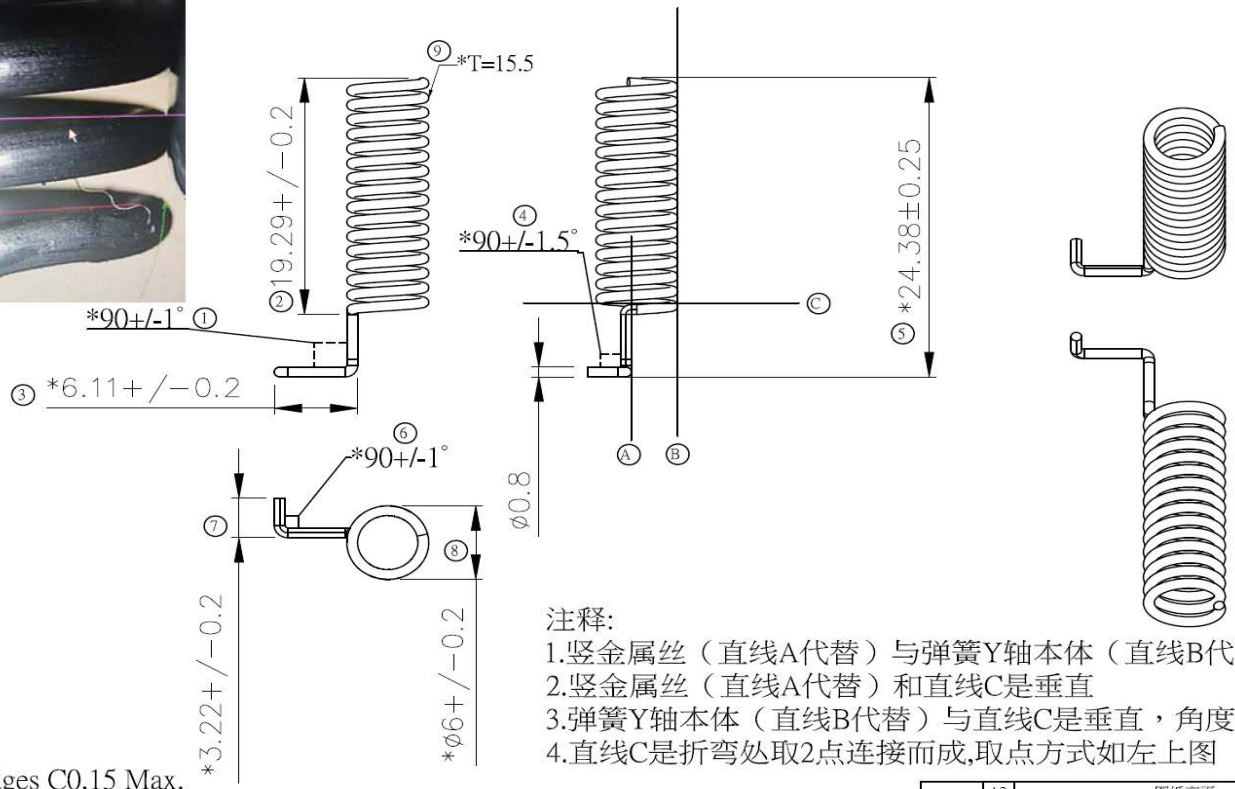

注释:
1.竖金属丝（直线A代替）与弹簧Y轴本体（直线B代替）平行
2.竖金属丝（直线A代替）和直线C是垂直
3.弹簧Y轴本体（直线B代替）与直线C是垂直，角度公差为+/-1.5°
4.直线C是折弯处取2点连接而成,取点方式如左上图

Note:
1.Remove All Burrs.
2.Break All Corners And Edges C0.15 Max.
3.Diameter On Common Center And To Be Concentric Within 0.1 mm.
4.材质：碳钢镀镍.
5.所有材质均需符合〈HLMH-G3-E007>要求。
6. 带*号为重点尺寸

NO.	SORT	SPECIFICATION	QTY	VENDOR

ECN NO	版次	变更内容	日期	确认
	A2	图纸变更	2018.06.05	金剑
	A1	图纸变更	2018.05.08	金剑
	A0	初版发行	2018.04.26	金剑

RANGETOLERANCES: 0-6 ±0.1; 6-30 ±0.15; 30-120 ±0.2; 120-400 ±0.25; 400以上 ±0.30; METRIC: mm

客户名称:	金宝通	常熟市泓博通讯股份有限公司 CHANGSHU HONGBO TELECOMMUNICATION TECHNOLOGY CO.,LTD	
客户料号:	2432SUN015110CM6		
泓博料号:	00-2904040000	产品名称: 金宝通发射机 418 螺旋杆	
制 图:	金剑	页 次:	日 期: 2018.06.05
R&D 审核:	牟振韬	版 本: A2	比 例: 1:1
核 准:	李勇		校 对: 金剑

Thanks For Your Kind Support!