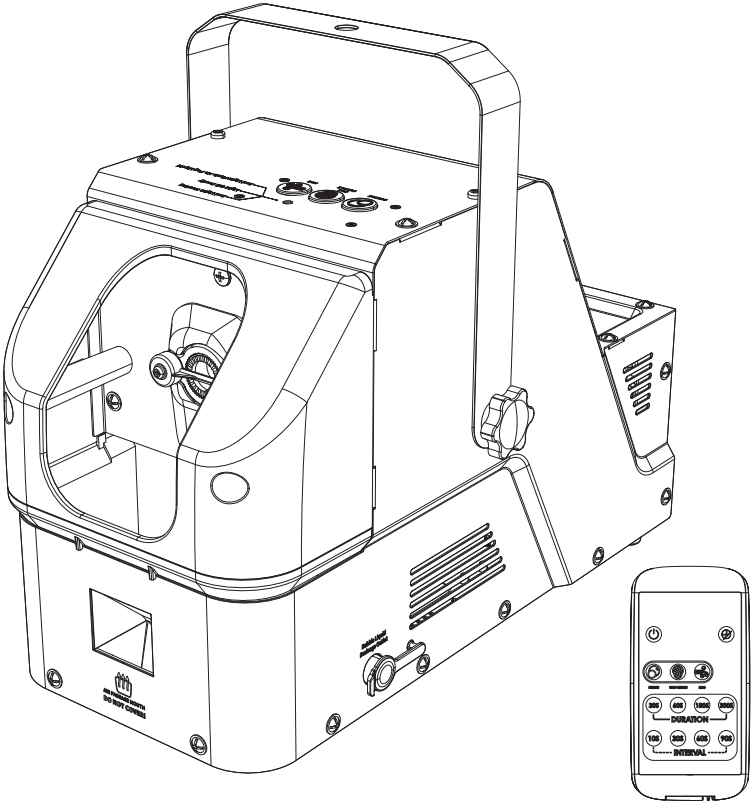

BUBBLE FOG MACHINE

Model No.: QB-807RF

USER MANUAL

IMPORTANT: PLEASE READ ALL THE INSTRUCTIONS CAREFULLY BEFORE USING THIS PRODUCT

⚠DANGER:
Nozzle is HOT
Do not touch nozzle or stand within a distance of 3 feet.

⚠ATTENTION:
UNPLUG when not in use.

IMPORTANT TIPS:

- Ensure that bubble solution and fog fluid are poured into the correct corresponding reservoirs according to Step 2 below.
- Always make sure there is enough bubble liquid and fog juice in the tank before using Bubble Fog Machine.
- Do not remove the drainage caps (L) & (P) when there is liquid in the tank unless you intend to drain the item of its contents. Drain over a trash bin or empty reservoir.
- Make sure that the end of the (I) Tube touches the bottom of the bubble liquid tank and that there is no blockage.
- Bubble Fog Machine needs 3 - 5 minutes to warm up after turn on the power switch. This machine will be ready to produce fog when the (D) LED Status Indicator light off.
- If the LED indicator flashes after the fog fluid is filled, it indicates that the fog juice is too dense and needs to be added with an appropriate amount of tap or distilled water for dilution. Please add the water into the fog liquid tank slowly and stir until the LED indicator stops flashing.

SLIP HAZARD:
Excessive residue bulid up under the nozzle and drop to the floor can create a potential slip hazard.
Wipe away with a damp cloth immediately.

WARNING

To prevent risk of personal injury, fire and electric shock:

- Never leave this unit unattended while plugged in. Unplug when not in use or refilling.
- Connect only to a properly grounded power outlet.
- Place product on a flat, level HARD surface and connect the cord to prevent the product from overturning.
- For use only in covered areas. Keep unit dry, do not expose to rain or moisture.
- Leave enough space for good ventilation. Keep unit cool and away from other objects.
- Do not overfill the liquid.
- Keep away from flames and flammable/explosive substances to avoid fire or explosions. Never pour flammable liquids such as gas, perfume etc. into the fog bubble machine.
- Do not spray in the direction of flames or people. Stay at least 3 feet (91 cm) from the nozzle.
- Do not obstruct the nozzle.
- Do not open unit. No user serviceable parts inside, please refer to your vendor. Only an electrician can change the power cord.
- For adult use only. Keep out of reach of children and pets. When children or pets are present, close adult supervision is necessary.

DESCRIPTION OF PARTS

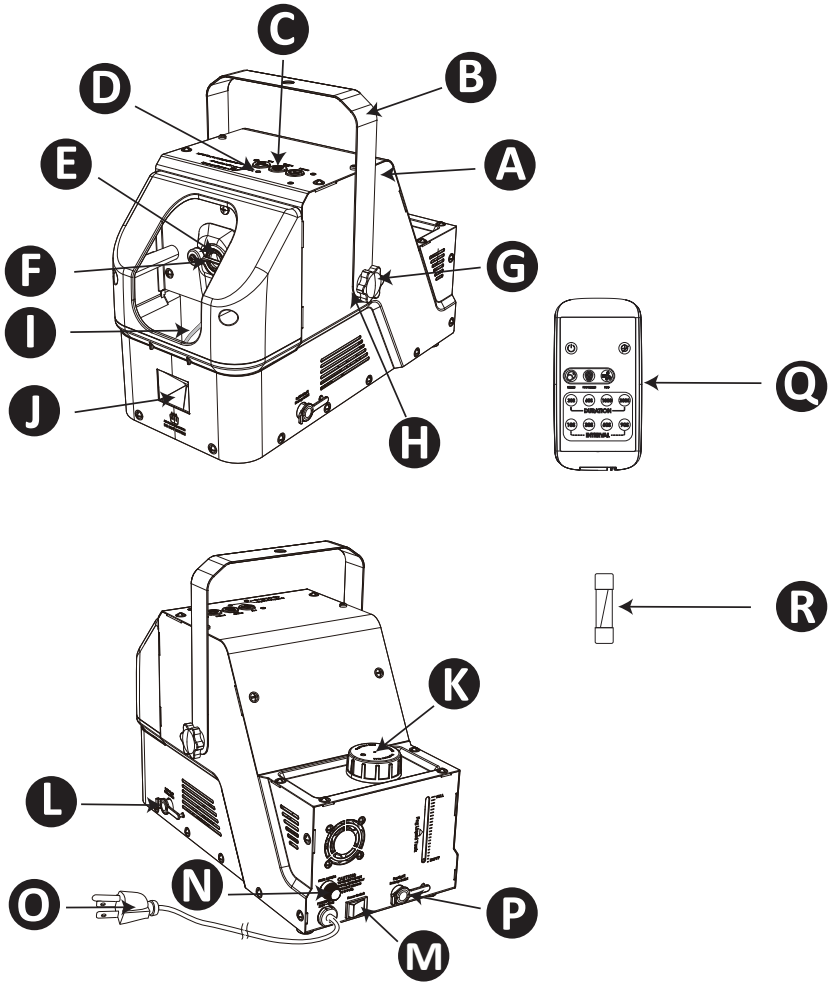

A. Bubble Fog Machine	B. Handle	C. Function Button
D. LED Status Indicator	E. Nozzle	F. Bubble Scraper
G. Handle Screw x 2	H. Rubber Washer x 2	I. Tube
J. Air Outlet	K. Fog Liquid Tank Cap	L. Bubble Liquid Drainage Cap
M. Power Switch	N. Fuse	O. Power Cord
P. Fog Liquid Drainage Cap	Q. Wireless Remote Control	R. Replacement Fuse (125V, 5A)

GENERAL INSTRUCTIONS

1

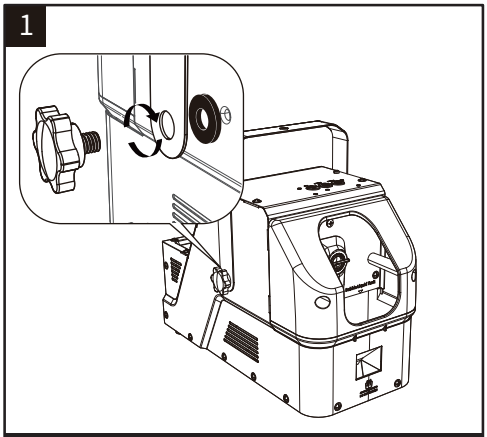

Secure the (B) Handle to the (A) Bubble Fog Machine using the (G) Handle Screw and the (H) Rubber Washer.

NOTE: Keep the hole on the arm of the handle is aligned with the hole on the rubber washer and the bubble fog machine main body.

2

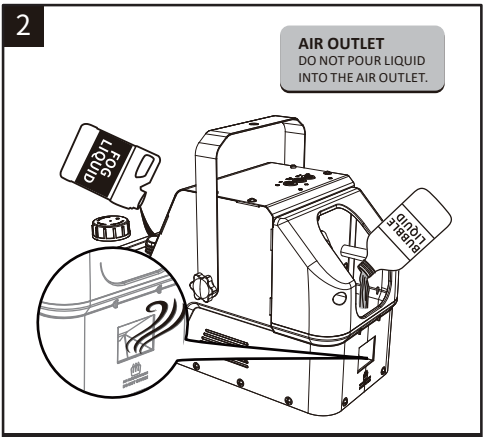

Fill the bubble liquid tank and fog liquid tank up to their maximum fill lines. Do not pour liquid into the air outlet.

NOTE: Do NOT include Bubble Solution and Fog Fluid in box, please purchase two types of liquid separately.

(Observe the FAQ's on page 8 for more details)

3

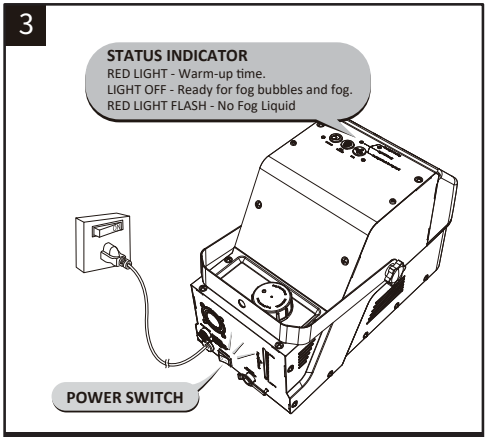

Plug the (O) Power Cord into a standard A/C grounded wall outlet and turn on the (M) Power Switch. The (D) LED Status Indicator will turn red approximately 3 to 5 minutes indicating that the machine is heating. When fully heated, the LED status indicator will light off.

4

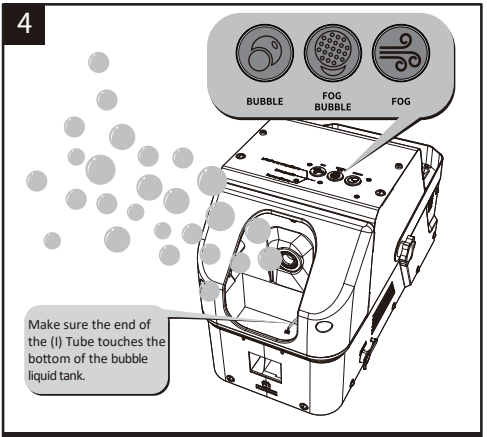

Push the (C) Function Button or the (Q) Wireless Remote Control to activate the different working modes as you want.

BUBBLE - make the regular colorful bubbles
FOG BUBBLE - create white fog filled bubbles
FOG - produce the continuous fog

REMOTE CONTROL USAGE

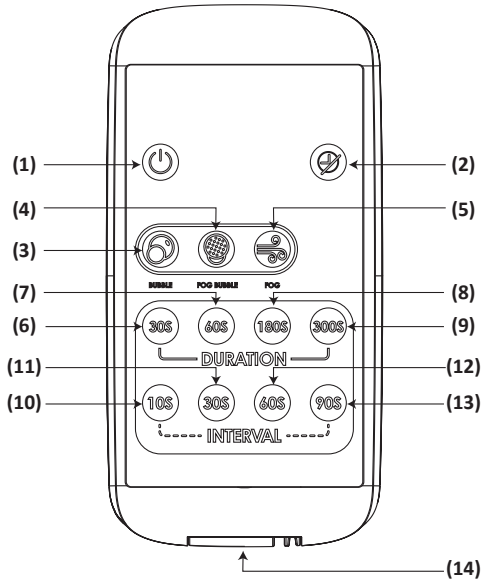

(1) ON/OFF
(2) Timer Off
(3) Only Bubbles
(4) Fog Bubbles
(5) Only Fog
(6) 30 Seconds Working
(7) 60 Seconds Working
(8) 180 Seconds Working
(9) 300 Seconds Working
(10) 10 Seconds Interval
(11) 30 Seconds Interval
(12) 60 Seconds Interval
(13) 90 Seconds Interval
(14) Battery Compartment

Timer Settings: e.g., push the button "30S" of DURATION section and the button "10S" of INTERVAL section, this machine will run 30 seconds in current working mode, then pause 10 seconds, repeat this cycle. Push the button "Timer Off" to cancel the timer settings.

CAUTION

1. Timer settings should be finished within 10 seconds, otherwise the function of timer on the remote control will not work.
2. One remote control can operate multiple bubble fog machines at the same time in the wireless signal range.
3. Maximum remote control distance is about 40 feet (12 meters).

⚠ WARNING

- **INGESTION HAZARD:** This product contains a button cell or coin battery.
- **DEATH** or serious injury can occur if ingested.
- A swallowed button cell or coin battery can cause **Internal Chemical Burns** in as little as **2 hours**.
- **KEEP** new and used batteries **OUT OF REACH of CHILDREN**.
- **Seek immediate medical attention** if a battery is suspected to be swallowed or inserted inside any part of the body.

BATTERY REPLACEMENT

1

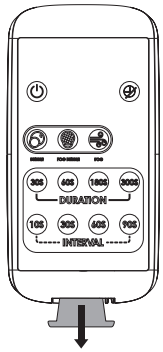

Remove the insulating strip in the battery compartment of remote control when use it at the first time.

2

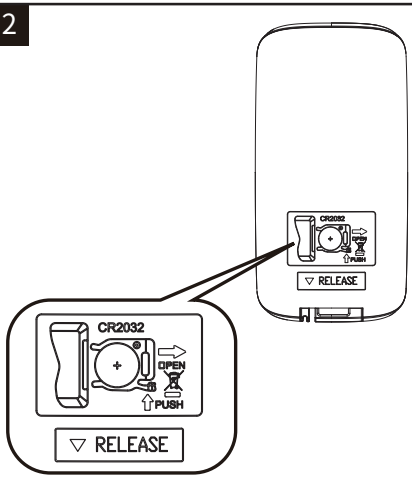

Read the illustration on the back of remote control carefully, release the battery compartment accordingly.

3

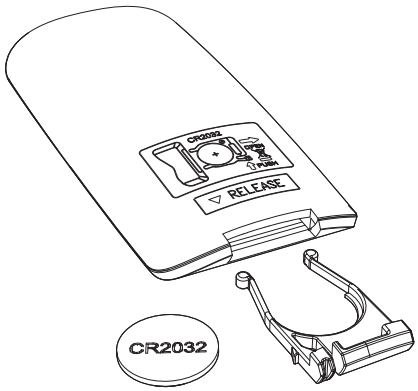

Remove exhausted battery from remote control.
WARNING: The used batteries should not be disposed of in fire. The batteries inside may explode or leak.

4

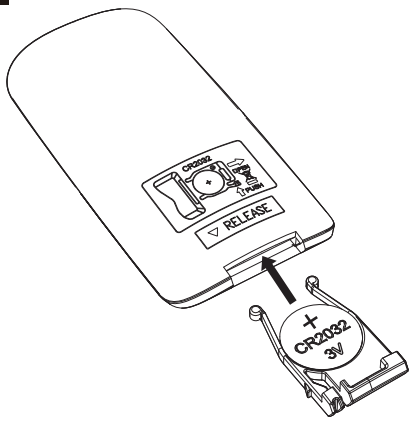

Be sure to insert batteries with correct polarities, use only batteries of the same or equivalent type as recommended.
CAUTION: Remove batteries before storage or extended periods of non-usage.

TROUBLE SHOOTING

Bubble Fog Machine do not work after plugged in	• Ensure there is sufficient fog fluid and bubble solution in their tanks. • Ensure the bubble fog machine is plugged into a working outlet (Output Voltage: AC 120V ~ 60Hz). • Ensure the fuse is not blown. Follow instruction under “Fuse Replacement” section.
LED status indicator turn red light at the front of bubble fog machine	• Ensure there is sufficient fog fluid in the fog liquid tank. • Ensure the machine has been given 3 - 5 minutes to heat up on “FOG BUBBLE” and “FOG” modes. • Use the professional water-based fog fluid which are used on the general fog machines for party, stage, Halloween and more.
The LED indicator turn red and flashes even though the fog fluid is filled	The fog juice which you used is too dense and needs to be added with an appropriate amount of tap or distilled water for dilution. Please add the water into the fog liquid tank slowly and stir until the LED indicator stops flashing.
Bubbles output is low	• Clean the bubble liquid tank with water (details in “CLEANING” procedure section). • Ensure there is sufficient bubble solution in the bubble liquid tank. • Use the professional bubble solution from online or local stores, not homemade soap water. • Can add some concentrated bubble liquid into bubble solution to get more bubbles.
Wireless remote control do not work	• Ensure the remote control is removed the insulating strip. • Replace the new battery (1 x 3V, CR2032 Button Cell Battery). • Ensure you are standing close enough to the bubble fog machine for the machine to pick up the signal from the remote control.

CLEANING

Please Clean The Bubble Liquid Tank After Each Use As The Following Tips:

1. Discharge all the bubble liquid and fog liquid through the two different drainage outlets.
2. Close the outlets and pour 10.14 fl oz / 300 ml distilled water into bubble liquid tank only.
3. Push the function button **"BUBBLE"** and let it work for 5 to 10 minutes.
4. Turn off the machine and discharge the distilled water.
5. Do not clean the fog liquid tank after use.

FUSE REPLACEMENT

To reduce the risk of fire, replace only with same size and type of fuse.

1. Grasp plug and remove from the receptacle or other outlet device.
   Do not unplug by pulling on cord.
2. Open fuse cover and remove fuse carefully.
3. Replace fuse only with 5.0 Amps, 125 Volts fuse.
4. Close fuse cover. Be sure not to over tighten.

STORAGE

It is important to remove all liquid from the unit when storing for an extended period of time.

1. When the unit is unplugged and cool, empty bubble liquid and fog liquid from the machine.
2. Before storage, it is recommended to follow the “CLEANING” procedure available in user manual.
3. Run unit in a well-ventilated area for 10 seconds to confirm tank is empty and dry.
4. Store on a flat, level surface. Keep in a well-ventilated, cool and dry location.

FREQUENTLY ASKED QUESTIONS (FAQ’s)

1. Is artificial fog safe to breathe?

Most fog machines use fog solution made of a combination of water and a chemical called glycol which has been found to be safe and is not considered hazardous to humans. Fog machines and fog solution can generally be used without problems. However, some people do complain of respiratory problems or throat irritation when exposed to theatrical fog. Because the fog can be irritating or drying, extended periods of exposure to the fog should be minimized.

- If the product is used indoors, you should make sure the room has adequate ventilation.
- It is a good idea not to breathe the fog for extended periods of time.
- DO NOT expose the fog at close range to known asthmatics or allergenic sensitive people.

2. Will fog smoke set off smoke detectors or sprinkler systems?

Yes, it is possible that the water-based particles could set off some types of smoke detectors. Usually, this is only a problem with optical-type detectors, because they sense the particles as smoke.

- Sprinkler systems, on the other hand, are usually triggered by heat, so the fog in the air will not activate heat-activated sprinkler systems.
- We recommend you run a test when used indoors to see if the fog will activate any smoke detectors. Also, when using the product indoors, we recommend that the room have adequate ventilation.
- Also, if you spray a lot of fog in a small room, you may see a very thin film of residue on everything in the room. It may feel slightly sticky, but is not harmful.

3. Can food coloring or scented fluids be added to the fog solution?

No. Never add materials of any kind (i.e. oil, gas, perfume, food coloring) to the fog solution.

4. Can I make my own fog fluid and bubble solution?

No. We highly recommend against trying to make your own fog fluid and bubble solution. The chemical content of the fog fluid and bubble solution are designed around the specifications of the product. A homemade fog fluid and bubble solution will not be safe, hazard-free and as efficient as a commercial version. Only the professional water-based fog juice and bubble liquid from online or local stores are recommended.

5. How much solution will my Bubble Fog Machine use?

This depends on many variables such as the volume of fog and bubbles you set the machine to produce and the frequency of the sprays. In general, expect 1 Quart / 32 fl.oz / 946 ml of bubble solution to last 1 to 2 hours, 1 Quart / 32 fl.oz / 946 ml of of fog juice can last 4 to 5 hours.

6. Is fog and bubbles blowing directly onto food or pets harmful?

It is not recommended that the fog and bubbles from the product be blown directly onto food or pets. The fog and bubbles may leave a light residue on surfaces, similar to a hot shower on a mirror. Again, use in well-ventilated areas.

7. Can I use water in fog liquid tank?

No. Water may cause permanent damage to your Bubble Fog Machine.

8. Which type of fog fluid should be used for Bubble Fog Machine?

- This machine use the same water-based fog fluid as other 400-1500 watts smoke fog machines which are ususally used for party, stage, dj, club, Halloween and more.
- The **Medium Density** fog juice from online or local stores are recommended by manufacturer, homemade fog liquid may NOT produce any smoke/fog on this machine.

9. What kind of bubble solution is good for Bubble Fog Machine?

- This machine use the same bubble solution as other bubble makers and bubble machines which are usually used as kids bubble toys, stage bubble effect, celebrations and more.
- The commercial and professional bubble solution or concentrated bubble liquid from online or local stores are recommended by manufacturer, homemade soap water may NOT make any bubbles.

TECHNICAL SPECIFICATIONS

Rated Voltage: AC 120V, 60Hz
Power: 400W
Fuse: 125V, 5A
Preheat Time: 3 - 5 Minutes
Fog Liquid Tank Capacity: 10.5 fl oz / 310 ml
Bubble Liquid Tank Capacity: 18.6 fl oz / 550 ml
Ambient Temperature: 5 ~ 45℃
Dimension: L344 x W193 x H231 mm
L13.54 x W7.59 x H9.09 inch

BATTERY INFORMATION AND SAFETY PRECAUTIONS

This notice applies to the CR2032 button cell battery used in the remote control of Wisdomlit Bubble Fog Machine.

1. Battery Disposal and Safety

a) Proper Disposal: Used batteries must be removed and recycled or disposed of immediately according to local regulations. Keep batteries out of children's reach. Do not discard batteries with household trash or incinerate them.
b) Risk of Injury: Even used batteries can cause severe injury or death.
c) Emergency Assistance: In case of accidental ingestion or exposure, call a local poison control center for treatment information.
d) Battery Type: This remote control is compatible with a CR2032 button cell battery.
e) Battery Voltage: The nominal voltage for the CR2032 battery is 3V.
f) Recharging Hazard: Non-rechargeable batteries, the CR2032 should never be recharged.
g) Misuse Warning: Do not force discharge, recharge, disassemble, heat above the manufacturer's specified temperature rating or incinerate the battery. Such actions may result in injury from venting, leakage or explosion, leading to chemical burns.

2. Battery Installation and Care

a) Correct Installation: Ensure the batteries are installed correctly according to the indicated polarity (+ and -).

b) Storage Disposal: If equipment is not going to be used for an extended period, remove and immediately recycle or dispose of the batteries according to local regulations.

c) Secure Battery Compartment: Always make sure the battery compartment is securely closed. If the battery compartment does not close properly, stop using the product, remove the batteries and keep them out of children's reach.

WARNING

This device complies with Part 15 of the FCC Rules. Operation is subject to the following two conditions: (1) this device may not cause harmful interference, and (2) this device must accept any interference received, including interference that may cause undesired operation.

CAUTION: Changes or modifications not expressly approved by the party responsible for compliance could void the user's authority to operate the equipment.

NOTE: This equipment has been tested and found to comply with the limits for a Class B digital device, pursuant to Part 15 of the FCC Rules. These limits are designed to provide reasonable protection against harmful interference in a residential installation. This equipment generates, uses, and can radiate radio frequency energy and, if not installed and used in accordance with the instructions, may cause harmful interference to radio communications. However, there is no guarantee that interference will not occur in a particular installation. If this equipment does cause harmful interference to radio or television reception, which can be determined by turning the equipment off and on, the user is encouraged to try to correct the interference by one or more of the following measures:

- Reorient or relocate the receiving antenna.
- Increase the distance between the equipment and receiver.
- Connect the equipment into an outlet on a circuit different from that to which the receiver is connected.
- Consult the dealer or an experienced radio/TV technician for help.

RF Exposure Statement

The device has been evaluated to meet general RF exposure requirement. The device can be used in portable exposure condition without restriction.