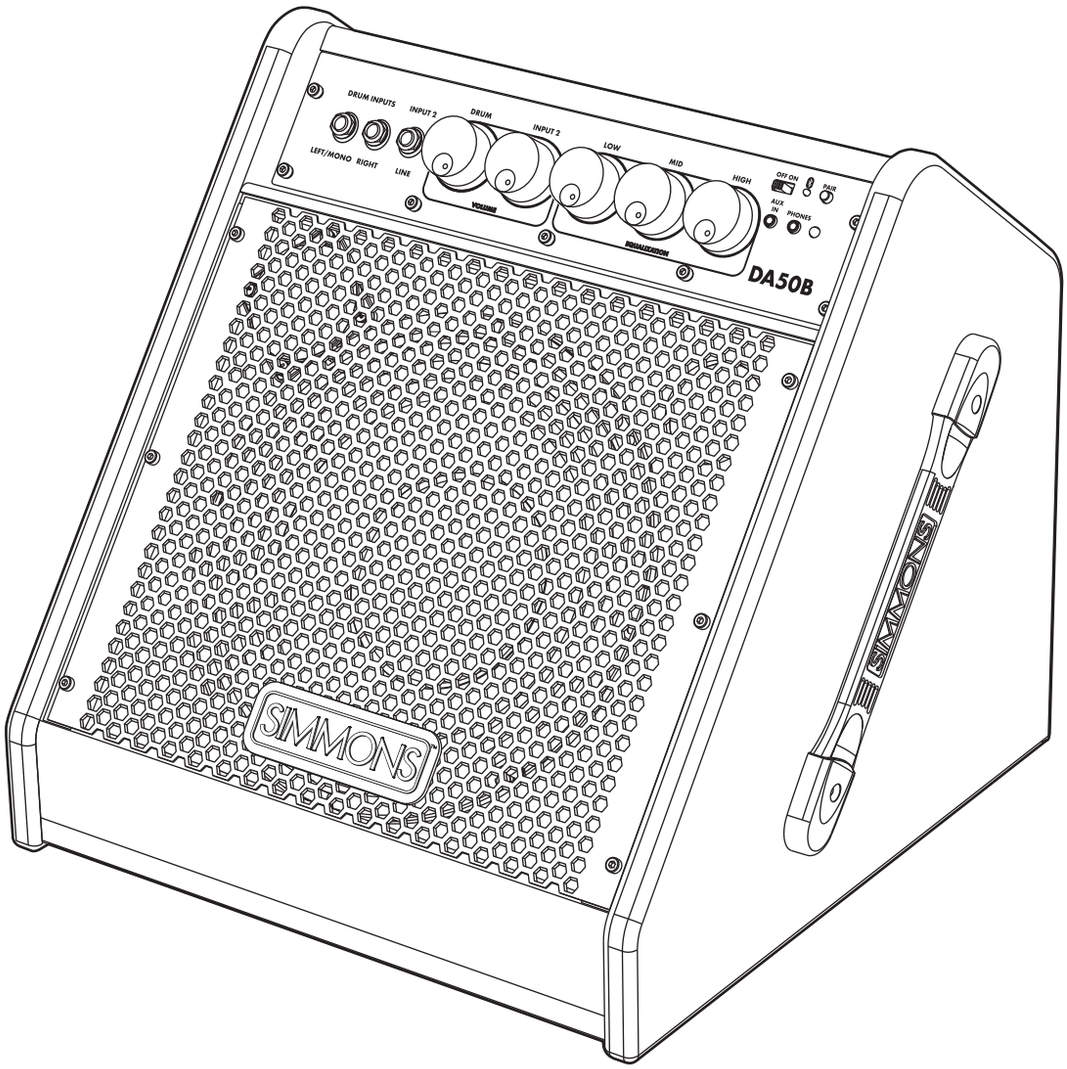

SIMMONS

DA50B

50 WATT DRUM AMPLIFIER

OWNER'S MANUAL

SimmonsDrums.net

TABLE OF CONTENTS

WELCOME AND CONGRATULATIONS! 3
FRONT PANEL 4
FEATURES 5
SPECIFICATIONS 6
SIGNAL FLOW DIAGRAM 6
WARRANTY. 7

18340578 Simmons DA50B manual_REV.indd 2 11/28/18 10:54 AM

WELCOME AND CONGRATULATIONS!

… on your purchase of the Simmons DA50B Electronic Drum Amplifier. To get the most enjoyment, we recommend that you review this manual at least once, then refer back to it often to learn more about specific functions.

TAKING CARE OF YOUR DIGITAL DRUM AMPLIFIER

Location
- To avoid deformation, discoloration, or more serious damage, do not expose the unit to direct sunlight, high temperature sources, or excessive humidity.

Power Supply
- Turn the power switch off when the DA50B is not in use.
- The AC adapter should be unplugged from the AC outlet if the DA50B will not be used for an extended period of time.
- Avoid plugging the AC adapter into an AC outlet that is also powering high-consumption appliances such as electric heaters or televisions. Also avoid using multi plug adapters since these can reduce sound quality, cause operation errors, and result in possible damage.
- To avoid damage, turn off the DA50B's power switch and all related devices prior to connecting or disconnecting cables.

Handling and Transport
- Never apply excessive force to controls, connectors, and other parts.
- Unplug cables by gripping the plug firmly. Do not pull on the cable.
- Physical shocks caused by dropping or bumping can result in serious damage.

Cleaning
- Clean with a dry, soft cloth.
- A slightly damp cloth may be used to remove stubborn grime and dirt.
- Never use cleaners such as alcohol or thinner.

Electrical Interference
- The DA50B contains electronic circuitry that may cause interference if placed too close to radio or television receivers. If this occurs, move the DA50B further away from the affected equipment.

Service and Modification
- There are no user serviceable parts in the DA50B.
- Do not attempt to open the DA50B or make any change to circuits or parts. This will void the warranty.

18340578 Simmons DA50B manual_REV.indd 3 11/28/18 10:54 AM

FRONT PANEL

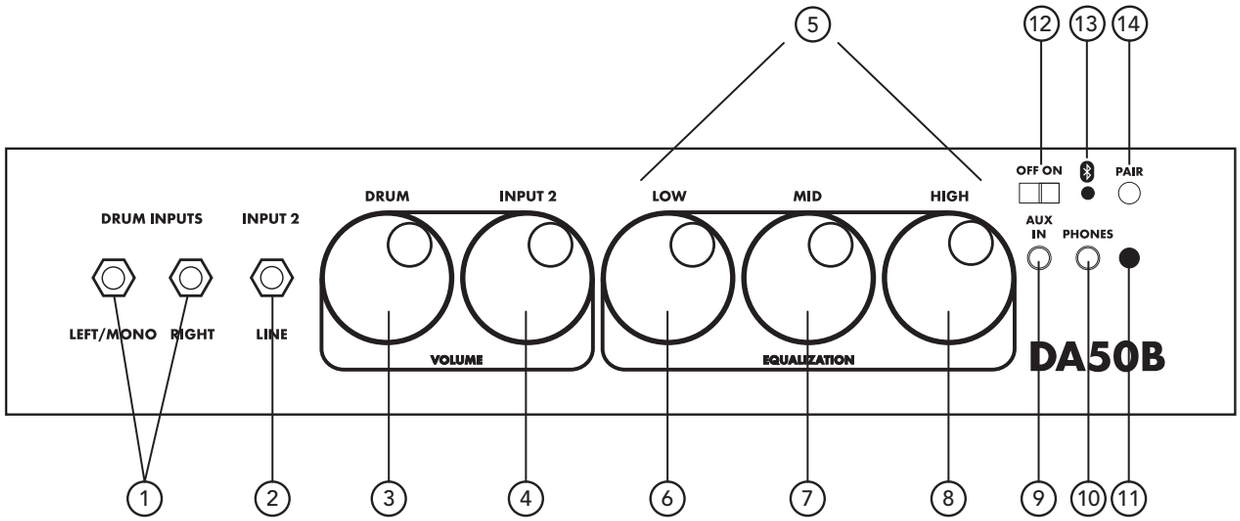

1. Drum Inputs: These are ¼" input jacks (left and right). When using a mono signal, plug into the left/mono jack.
2. Input 2: This jack is used for connecting any pre-EQ source such as a click track. The volume of Input 2 is controlled by the Input 2 Volume control.
3. Drum Volume: This controls the volume level of the Drum Inputs to the power amplifier.
4. Input 2 Volume: This controls the volume level of Input 2 only.
5. Equalization Section: These control the overall tone of the DA50B drum amplifier.
6. Low: This controls frequencies centered at 60Hz with a +/-12 dB sweep.
7. Mid: This controls frequencies centered at 800Hz with a +/-12 dB sweep.
8. High: This controls frequencies centered at 10 kHz with a +/-12 dB sweep.
9. Aux In: This is a 1/8" stereo line input. It bypasses the drum amplifier's EQ tone controls and feeds straight into the power amplifier. Use the volume and tone controls on your external device to control the audio signal.
10. Headphone Jack: This is a 1/8" stereo output jack for silent practice. When used, it turns off the internal speaker. It combines all inputs from your drums: Input 2, Aux Input and Bluetooth Input.
11. Power "On" Indicator
12. Bluetooth On/Off Switch
13. Bluetooth Indicator: Fast Blink- Amp is powered on, Bluetooth switch is ON and no Bluetooth source device is connected. Slow Blink- Ready to pair, after pair button is held. Solid Light- Bluetooth source is connected.
14. Bluetooth Pair Button: Press and hold this button to pair a new device. Open Bluetooth preferences on your device and select "Simmons" to pair.

18340578 Simmons DA50B manual_REV.indd 4 11/28/18 10:54 AM

FEATURES

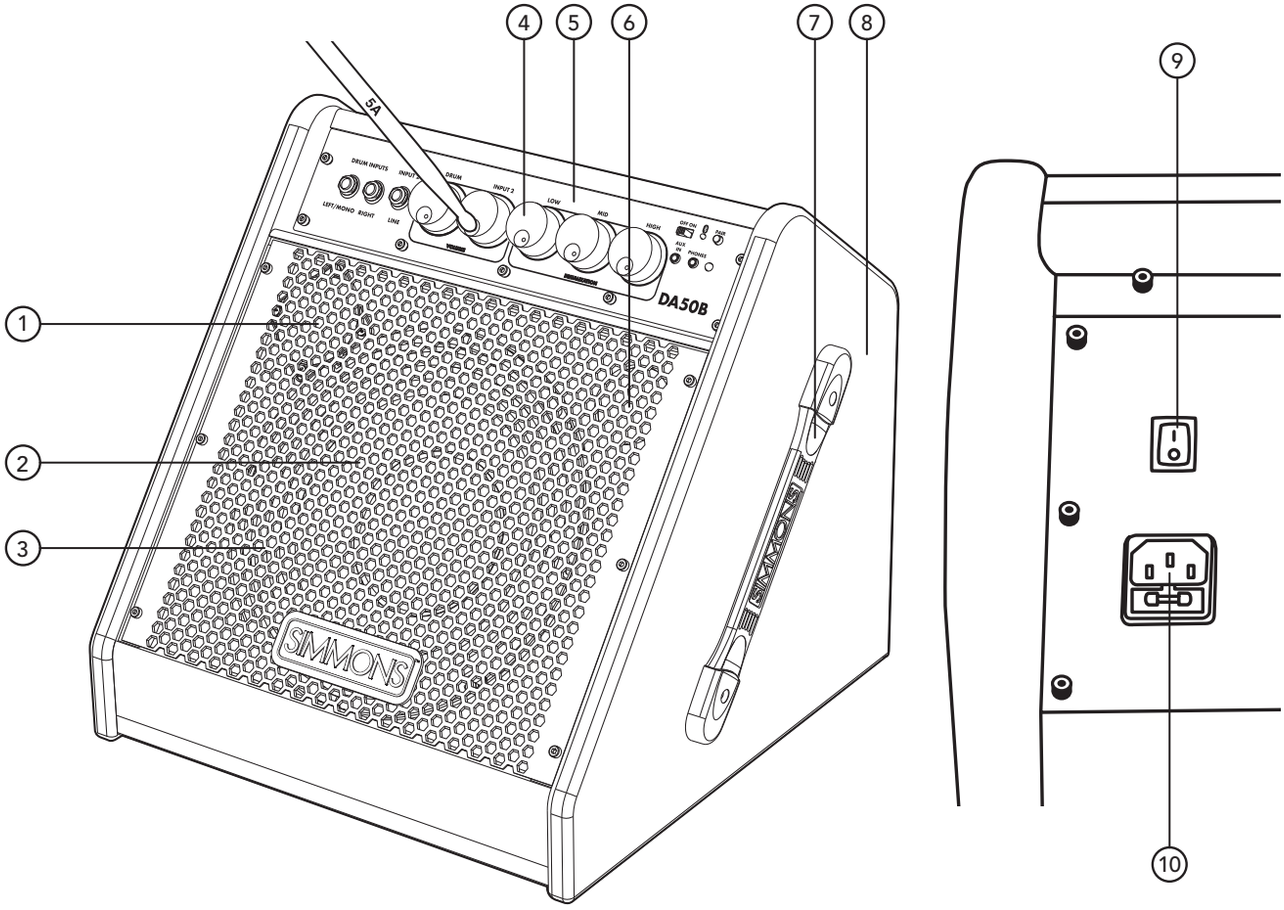

1. High-Frequency Tweeter for Cymbal Clarity
2. Heavy-Duty Woofer for Enhanced Bass Response
3. Heavy-Weight Steel Grill
4. Soft Touch Knobs (adjustable with your drum stick)
5. Control Panel
6. Ported Wooden Cabinet for Powerful Bottom End Projection
7. Handle for Easy Transport
8. Protective, Long-Lasting Carpet Covering
9. Power Switch
10. Fuse Holder & Power Cord Socket

18340578 Simmons DA50B manual_REV.indd 5 11/28/18 10:54 AM

SPECIFICATIONS

Output Power
50 W /8 ohm . . . . . Output to speakers
500mW / 32 ohm . . . . . Output to headphones

Frequency Response
20 -20kHz . . . . . Actual response is tailored for accurate acoustic reproduction of individual sounds

Total Harmonic Distortion
2% . . . . . At full output
0.1% . . . . . Nominal

Hum and Noise
-60 dBV . . . . . .All controls down
-55 dBV . . . . . .All controls at 12 o'clock

Input Impedance
10K ohms . . . . . All Inputs

Input Impedance Input Levels
(All measurements made at 1 kHz, EQ controls flat and volumes Max.)
-10 dBV . . . . . DRUM INPUTS to achieve full output
-10 dBV . . . . . INPUT 2 to achieve full output
0 dBV . . . . . .LINE IN to achieve full output

Tone Controls (EQ Centers)
60Hz, 800 Hz, 10kHz. . . . . 3-band, ±12 dBV

AC Power Requirements
80W . . . . . At full output
7W . . . . . At idle

Dimensions English
15.5" Deep, 15.5" Wide,
16" Tall (including feet)

Dimensions Metric
39.37cm Deep, 39.37cm Wide,
40.64cm Tall (including feet)

Weight - Lbs/Metric
33 lbs/ 15 Kg

Speakers 1 x 10" (250mm) Woofer,
1 x 2" (51mm) Tweeter

SIGNAL FLOW DIAGRAM

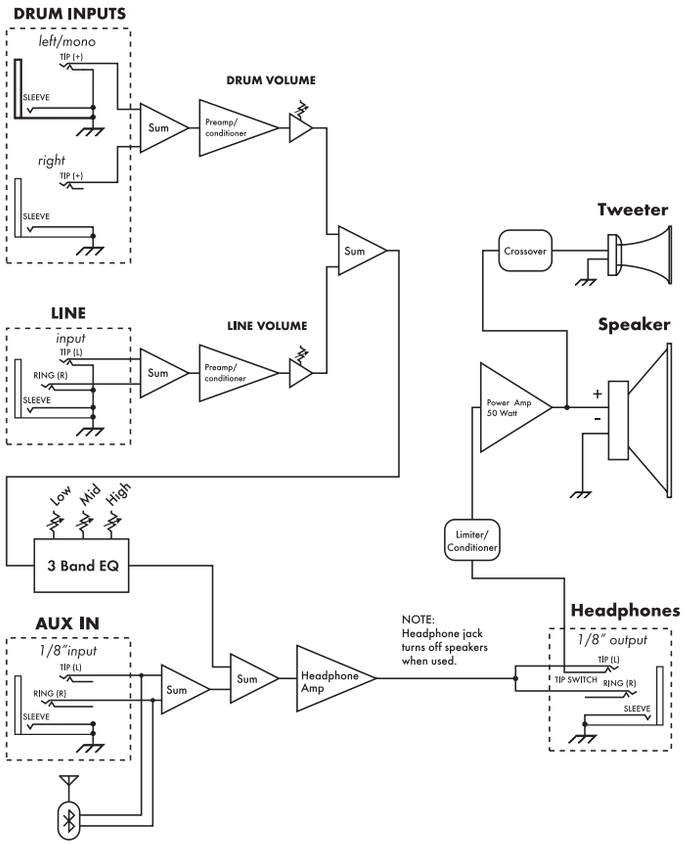

18340578 Simmons DA50B manual_REV.indd 6 11/28/18 10:54 AM

WARRANTY

Three (3) Years limited warranty
Subject to the limitations set forth below, Simmons® hereby represents and warrants that the components of this product shall be free from defects in workmanship and materials, including implied warranties of merchantability or fitness for a particular purpose, subject to normal use and service, for three (3) years to the original owner from the date of purchase.

Retailer and manufacturer shall not be liable for damages based upon inconvenience, loss of use of product, loss of time, interrupted operation or commercial loss or any other incidental or consequential damages including but not limited to lost profits, downtime, goodwill, damage to or replacement of equipment and property, and any costs of recovering, reprogramming, or reproducing any program or data stored in equipment that is used with Simmons® products. This guarantee gives you specific legal rights. You may have other legal rights which vary from state to state. Some states do not allow limitations on how long an implied warranty lasts, so the above limitation may not apply to you.

Simmons
P.O. Box 5111 Thousand Oaks, CA 91359-5111

All trademarks and registered trademarks mentioned herein are recognized as the property of their respective holders.

18340578 Simmons DA50B manual_REV.indd 7 11/28/18 10:54 AM

SIMMONS®

1811-18340578

IMPORTANT SAFETY INSTRUCTIONS

FRENCH

Danger
L'exposition a des niveaux eleves de bruit peut provoquer une perte permanente de l'audition, Chaque organisme humain reagit differemment quant a la perte de l'audition, mais quasiment tout le monde subit une diminution de l'acuite auditive lors d'une exposition suffisamment longue au bruit intense. Les autorites competentes en reglementation de bruit ont defini les expositions tolerees aux niveaux de bruits:

DURATION PER DAY (HOURS)	8	6	4	3	2	1
SOUND LEVEL (dB)	90	93	95	97	100	103

Selon les autorites, toute exposition dans les limites citees ci-dessus,peuvent provoquer certaines pertes d'audition. Des bouchons ou protections dans l'appareil auditif ou sur l'oreille doivent etre portes lors de l'utilisation de ce systeme d'amplification afin de prevenir le risque de perte permanente de l'audition, Dans le cas d'expositions superieures aux limites precitees il est recommande, afin de se premunir contre les expositions aux pressions acoustiques elevees potentiellement dangeureuses, aux personnes exposees aux equipements capables de delivrer de telles puissances, tels ce systeme d'amplification en fonctionnement, de proteger l'appareil auditif.

ATTENTION
RISQUE DE CHOC ELECTRIQUE NE PAS OUVRIR.

ATTENTION: AFIN DE LIMITER LE RISQUE DE CHOC ELECTRIQUE. NE PAS ENLEVER LE CHASSIS. NE CONTIENT PAS DE PIECES POUVANT ETRE REPAREE PAR L'UTILISATEUR. CONFIER LE SERVICE APRES-VENTE AUX REPARATEURS AGREES.

CE SYMBOLE A POUR BUT D'AVERTIR L'UTILISATEUR DE LA PRESENCE DE VOLTAGE DANGEREUX NON-ISOLE A L'INTERIEUR DE CE PRODUIT QUI PEUT ETRE DE PUISSANCE SUFFISAMMENT IMPORTANTE POUR PROVOQUER UN CHOC ELECTRIQUE AUX PERSONNES.

CE SYMBOLE A POUR BUT D'AVERTIR L'UTILISATEUR DE LA PRESENCE D'INSTRUCTIONS D'UTILISATION ET DE MAINTENANCE DANS LES DOCUMENTS FOURNIS AVEC CE PRODUIT.

AFIN DE REDUIRE LES RISQUÉ D'INCENDIE ET DE DECHARGE ELECTRIQUE, NE PAS EXPOSER CET APPAREIL A LA PLUIE OU A L'HUMIDITE.

Laite on liitettävä suojakoskettimilla varustettuun pistorasiaan
Apparatet må tilkoples jordet stikkontakt
Apparaten skall anslutas till jordat uttag

Apparatets stikprop skal tilsluttes en stikkontakt med jord, som giver forbindelse til stikproppens jord.

1. Lire avec attention toutes les recommandations et précautions d'emploi avant d'utiliser ce produit.
2. Toutes les recommandations et précautions d'emploi doivent être conservées afin de pouvoir s'y reporter si nécessaire.
3. Lire et comprendre tous les avertissements énumérés dans les précautions d'emploi.
4. Suivre toutes les précautions d'emploi pour utiliser ce produit.
5. Ce produit ne doit pas être utilisé près d'eau, comme par exemple baignoires, éviers, piscine, sous-sol humides ... Etc.
6. Utiliser exclusivement un chiffon sec pour nettoyer ce produit.
7. Ne bloquér aucune ouverture de ventilation. Ne pas placer le produit tout contre un mur ou dans une enceinte fernée, cela gênerait le flux d'air nécessaire au refroidissement.
8. Ne pas placer le produit près de toute source de chaeur telle que radiateurs, arrivées d'air chaud, fourneaux ou autres appareils générant de la chaleur (incluant les amplificateurs producteurs de chaleur) .
9. Ne pas négliger la sécurité que procure un branchement polarisé ou avec raccordement à la terre, Un branchement polarisé comprend deux fiches dont l'une est plus large que l'autre. Un branchement à la terre comprend deux fiches plus une troisième reliée à la terre. Si la fiche secteur fournie ne s'insert pas dans votre prise de courant. consulter un 'électricien afin de remplacer votre prise obsolète.
10. Protéger le cordon d'alimentation de tout écrasement ou pincement, particulièrement au niveau des fiches, des réceptacles utilisés et à l'endroit de sortie de l'appareil. Ne pas casser la fiche de terre du cordon d'alimentation.
11. Utiliser uniquement les accessoires spécifiés par le constructeur.
12. Utiliser uniquement avec le chariot de transport, le support, le trépied, la console ou la table spécifiés par le constructeur ou vendus avec l'appareil. Lors de l'utilisation d'un chariot, bouger avec précaution l'ensemble chariotlappareil afin d'éviter les dommages d'un renversement.
13. Débrancher cet appareil lors d'orages ou s'il n'est pas utilisé pendant une longue période.
14. Des précautions doivent être prises afin qu'aucun objet ne tombe et qu'aucun liquide ne se répande à l'intérieur de l'appareil par les orifics de ventilation ou n'importe quelle autre ouverture.
15. Pour toutes interventions techniques s'adresser à un technicien qualifié.L'intervention technique est nécessaire lorsque l'appareil a été endommagé de n'importe quelle façon, comme par exemple si le cordon secteur ou sa fiche sont détériorés,si du liquide a coulé ou si des objets sont tombés à l'intérieur de l'apparei1,si l'appareil a été exposé à la pluie ou à l'humidité, s'il ne fonctionne pas normalement ou s'il est tombé.
16. ATTENTI0N:Pour réduire le risque d'incendie ou de choc electrique ne pas exposer l'appareil à la pluie ou à l'humidité.
17. Quand La prise MAINS, au coupler, est utilisé pour la source d'alimentation êlectrique. Il est conseillê de garder cette prise facilement accessible.
18. Borne de terre de protection: L'appareil doit être connecté à un connecteur AC principale avec un raccordement à la terre de protection.

IMPORTANT SAFETY INSTRUCTIONS

Danger
Exposure to extremely high noise levels may cause a permanent hearing loss. Individuals vary considerably to noise induced hearing loss but nearly everyone will lose some hearing if exposed to sufficiently intense noise for a sufficient time.

The U.S. Government's Occupational Safety and Health Administration (OSHA) has specified the following permissible noise level exposures:

DURATION PER DAY (HOURS)	8	6	4	3	2	1
SOUND LEVEL (dB)	90	93	95	97	100	103

According to OSHA, any exposure in the above permissible limits could result in some hearing loss. Earplugs or protectors in the ear canal or over the ears must be worn when operating this amplification system in order to prevent a permanent hearing loss. If exposure in excess of the limits as put forth above, to insure against potentially harmful exposure to high sound pressure levels, it is recommended that all persons exposed to equipment capable of inducing high sound pressure levels, such as this amplification system, be protected by hearing protectors while this unit is in operation.

CAUTION
RISK OF ELECTRIC SHOCK DO NOT OPEN

CAUTION: *TO REDUCE THE RISK OF ELECTRIC SHOCK, DO NOT REMOVE CHASSIS. NO USER-SERVICEABLE PARTS INSIDE. REFER SERVICING TO QUALIFIED SERVICE PERSONNEL.*

AVIS: RISQUE DE CHOC ELECTRIQUE-NE PAS OUVRIR.

THIS SYMBOL IS INTENDED TO ALERT THE USER TO THE PRESENCE OF NON-INSULATED "DANGEROUS VOLTAGE" WITHIN THE PRODUCT'S ENCLOSURE THAT MAY BE OF SUFFICIENT MAGNITUDE TO CONSTITUTE A RISK OF ELECTRIC SHOCK TO PERSONS.

THIS SYMBOL IS INTENDED TO ALERT THE USER TO THE PRESENCE OF IMPORTANT OPERATING AND MAINTENANCE (SERVICING) INSTRUCTIONS IN THE LITERATURE ACCOMPANYING THE UNIT.

APPARATUS SHALL NOT BE EXPOSED TO DRIPPING OR SPLASHING AND THAT NO OBJECTS FILLED WITH LIQUIDS, SUCH AS VASES, SHALL BE PLACED ON THE APPARATUS.

Laite on liitettävä suojakoskettimilla varustettuun pistorasiaan
Apparatet må tilkoples jordet stikkontakt
Apparaten skall anslutas till jordat uttag

Apparatets stikprop skal tilsluttes en stikkontakt med jord, som giver forbindelse til stikproppens jord.

1. Read all safety and operating instructions before using this product.
2. All safety and operating instructions should be kept for future reference.
3. Read and understand all warnings listed on the operating instructions.
4. Follow all operating instructions to operate this product.
5. This product should not be used near water, i.e. Bathtub, sink, swimming pool, wet basement, etc.
6. Only use dry cloth to clean this product.
7. Do not block any ventilation openings, It should not be placed flat against a wall or placed in a built-in enclosure that will impede the flow of cooling air.
8. Do not install this product near any heat sources; such as, radiators, heat registers, stove or other apparatus (including heat producing amplifiers) that produce heat.
9. Do not defeat the safety purpose of the polarized or grounding-type plug. A polarized plug has two blades with one wider than the other. A grounding-type plug has two blades and a third grounding prong. The wide blade or the third prong are provided for your safety if the provided plug does not fit into your outlet, consult an electrician for replacement of the obsolete outlet.
10. Protect the power cord being walked on or pinched, particularly at Plugs, convenience receptacles and the point where they exit from the apparatus. Do not break the ground pin of the power supply cord.
11. Only use attachments specified by the manufacturer.
12. Use only with the cart, stand, tripod, bracket, or table specified by the manufacturer or sold with the apparatus. When a cart is used, use caution when moving cart/apparatus combination to avoid injury from tip-over.
13. Unplug this apparatus during lightning storms or when unused for long periods of time.
14. Care should be taken so that objects do not fall and liquids are not spilled into the unit through the ventilation ports or any other openings.
15. Refer all servicing to qualified service personnel. Servicing is required when the apparatus has been damaged in any way; such as, power-supply cord or plug is damaged, liquid has been spilled or objects have fallen into the apparatus, the apparatus has been exposed to rain or moisture, does not operate normally or has been dropped.
16. WARNING: To reduce the risk of fire or electric shock, do not expose this apparatus to rain or moisture.
17. When the MAINS plug, or an appliance coupler is used as the disconnect device, the disconnect device shall remain readily operable.
18. Protective Ground Terminal: The apparatus shall be connected to an AC main socket with a protective earth ground connection.

Caution:
This device complies with Part 15 of the FCC Rules / Industry Canada licence-exempt RSS standard(s).
Operation is subject to the following two conditions: (1) this device may not cause harmful interference, and (2) this device must accept any interference r eceived, including interference that may cause undesired operation.

Le présent appareil est conforme aux CNR d'Industrie Canada applicables aux appareils radio exempts de licence. L'exploitation est autorisée aux deux conditions suivantes : (1) l'appareil ne doit pas produire de brouillage, et (2) l'utilisateur de l'appareil doit accepter tout brouillage radioélectrique subi, même si le brouillage est susceptible d'en compromettre le fonctionnement.

Changes or modifications not expressly approved by the party r esponsible for compliance could void the user's authority to operate the equipment.

This equipment has been tested and found to comply with the limits for a Class B digital device, pursuant to part 15 of the FCC Rules. These limits are designed to provide reasonable protection against harmful interference in a residential installation. This equipment generates uses and can radiate radio frequency energy and, if not installed and used in accordance with the instructions, may cause harmful interference to radio communications. However, there is no guarantee that interference will not occur in a particular installation. If this equipment does cause harmful interference to radio or television reception, which can be determined by turning the equipment off and on, the user is encouraged to try to correct the interference by one or more of the following
measures:
—Reorient or relocate the receiving antenna.
—Increase the separation between the equipment and receiver.
—Connect the equipment into an outlet on a circuit different from that
to which the receiver is connected.
—Consult the dealer or an experienced radio/TV technician for help.

Under Industry Canada regulations, this radio transmitter may only operate using an antenna of a type and maximum (or lesser) gain approved for the transmitter by Industry Canada. To reduce potential radio interference to other users, the antenna type and its gain should be so chosen that the equivalent isotropically radiated power (e.i.r.p.) is not more than that necessary for successful communication.

Conformément à la réglementation d'Industrie Canada, le présent émetteur radio peut fonctionner avec une antenne d'un type et d'un gain maximal (ou inférieur) approuvé pour l'émetteur par Industrie Canada. Dans le but de réduire les risques de brouillage radioélectrique à l'intention des autres utilisateurs, il faut choisir le type d'antenne et son gain de sorte que la puissance isotrope rayonnée équivalente (p.i.r.e.) ne dépasse pas l'intensité nécessaire à l'établissement d'une communication satisfaisante.