M1-MINI USER GUIDE

REV. 05/27/2022

JADAK
A Novanta Company

COPYRIGHT INFORMATION:

Copyright 2022 Novanta Corporation. All rights reserved.

Version 05/17/2022

This product or document is protected by copyright and distributed under licenses restricting its use, copying, distribution, and decompilation. No part of this product or document may be reproduced in any form by any means without prior written authorization of Novanta Corporation and its licensors, if any.

CryptoRF is a registered trademark of Atmel Corporation.
MIFARE and NXP is a registered trademark of Royal Philips Electronics.
Tag-it is a trademark of Texas Instruments, Incorporated.
Microsoft and Windows are registered trademarks of Microsoft Corporation.

TECHNICAL SUPPORT AND CONTACT INFORMATION:

TELEPHONE: 315.701.0678

www.jadaktech.com

Email: RFID-support@jadaktech.com

TABLE OF CONTENTS

1 About this Document 8

1.1 Intended Audience 8

1.2 Topics Covered 8

1.3 Topics Not Covered 8

1.4 Additional Documentation 9

1.5 Revision History 9

2 Definition of Terms 10

3 Ordering Information 11

3.1 Part Numbers 11

4 SkyeModule M1-Mini Overview 12

4.1 Features 13

5 Mechanical Specifications 14

5.1 Dimensioned Drawings 14

6 Pinning Information 15

6.1 Pin Locations 15

7 Environmental Specifications 16

7.1 Electrostatic Precautions 16

7.2 Temperature Ratings 16

8 Electrical Specifications 17

8.1 Absolute Maximum Ratings 18

8.2 Power Supply Options 19

9 Host Interface Specifications 20

9.1 TTL Serial 20

9.2 SPI 21

9.3 I^2C 22

10 Radio Specifications and Regional Compliance 23
10.1 Agency Approval 23
10.2 Modular Certifications 23
10.3 Frequency Band 23
10.4 Tag Protocols 23
10.5 Communication Regulation Information 23
10.5.1 Federal Communication Commission (FCC) Interference Statement 23
10.5.2 User Manual Requirements 24
10.5.3 FCC End Product Labeling 25
10.5.4 ISED Canda (English) 25
10.5.5 ISED Canda (French) 25
11 Antenna Options 26
11.1 Read Range 26
11.2 Antenna Configurations 26
12 Communication Specifications 28
12.1 SkyeTek Protocol v2 28
12.2 Request Formats 28
12.3 Response Formats 29
13 Customizing System Parameters 30
13.1 Changing System Parameters 31
13.2 System Parameter Descriptions 32
13.2.1 Serial Number 32
13.2.2 Firmware Version 32
13.2.3 Reader ID 32
13.2.4 Baud Rate 32
13.2.5 Sleep Mode 32
13.2.6 Host Interface 33
13.2.7 Startup Command 33

14 Operating Modes 34

14.1 Sleep Mode 34

14.1.1 Write System Parameter – Sleep Mode Example (ASCII)..... 34

14.1.2 Write System Parameter – Sleep Mode Example (Binary) 34

14.1.3 Write Memory – Sleep Mode Example (Binary) 35

14.2 Loop Mode 36

14.2.1 Select Tag – Loop Mode Example (ASCII) 36

14.2.2 Select Tag – Loop Mode Example (Binary) 37

14.3 Startup Command 38

14.3.1 Write System Parameter – Startup Command Example (ASCII) 38

14.3.2 Write System Parameter – Startup Command Example (Binary) 39

14.3.3 Write System Parameter – Disable Startup Command Functionality (ASCII) 39

LIST OF FIGURES

Figure 1: Part Number Format 11

Figure 2: M1-Mini Shielded 12

Figure 3: M1-Mini Shielded Dimensions 14

Figure 4: Skyemodule M1-Mini Powered at VIN ≤ 5V 19

Figure 5: TTL Connection: SkyeModule M1-Mini to Host 20

Figure 6: SPI Connection: SkyeModule M1-Mini to Host 21

Figure 7: Details of the SPI Communication Link 22

Figure 8: I2C Connection: SkyeModule M1-Mini to Host 23

Figure 9: M1-Mini internal antenna schematic 25

Figure 10: Component Positions on M1-Mini Shielded 26

LIST OF TABLES

Table 1-1: Revision History 9

Table 6-1: Pin Locations 15

Table 7-1: Temperature Ratings 16

Table 8-1: Electrical Specifications 17

Table 8-2: Maximum Voltage Ratings 18

Table 11-1: SkyeModule M1-Mini Internal Antenna Configuration Details 25

Table 12-1: Request Format (bytes), ASCII Mode 27

Table 12-2: Request Format (bytes), Binary Mode 27

Table 12-3: Response Format (bytes), ASCII Mode 28

Table 12-4: Response Format (bytes), Binary Mode 28

Table 13-1: SkyeModule M1-Mini System Parameters 29

Table 13-2: Baud Rate Parameter Settings 31

1 About this Document

1.1 Intended Audience

The topics described in this document are intended for technical personnel interested in the M1-Mini device.

1.2 Topics Covered

The following topics are discussed in this document:

- Product overview
- Transponder compatibility
- Mechanical characteristics
- Electrical characteristics
- Tag timing table
- Pin descriptions
- Power supply
- Host interface connections
- Antenna connections
- Host software
- System parameters

1.3 Topics Not Covered

The following topics are covered in other documents offered through the "Technical Resources" section:

- Protocol specifications
- Troubleshooting
- SkyeWare Protocol HF tag commands (AN002)

1.4 Additional Documentation

The following technical references provide additional information on the topics described in this document:

- *M1 Mini Tag Support Matrix*
- *SkyeTek Protocol V2 Guide*
- *Using Tag Commands with STPv2*

1.5 Revision History

Revision	Author	Change
100112	Brad Alcorn	Updated the formatting of the document and revised errors.
110212	Brad Alcorn	Minor updates to reflect microcontroller change to product.
022714	Brad Alcorn	Updates to the part number and fixed a broken link.
082515	Steve Schneiter	Minor updates to address and tag support
06092017	Eric S. Harden	Add EU Declaration of Conformity, updated JADAK info
10112017	Eric S. Harden	Added modular certification and new drawings for shielded version
10252017	C. Hatem	Updated to new format/template
11142017	C. Hatem	New Mechanical Drawing & deletion of Skyetek reference
04242018	C. Hatem, E. Harden	New Mechanical Drawing
02242022	D. Ratner	Updates for 2022 Design Changes
04112022	Krishna Commuri	Updated host interface specifications, customizing system parameters and some minor updates
04272022	Krishna Commuri	Updated Table 6-1
05172022	Krishna Commuri	Updated Table 8-1 and Section 9.3
05272022	Krishna Commuri	Updated Section 10

Table 1-1: Revision History

2 Definition of Terms

3DES	Triple Data Encryption Standard
AES	Advanced Encryption Standard
API	Application Programming Interface
DES	Data Encryption Standard
HID	Human Interface Device
HMAC	Hash-based message authentication code
I^2C	Inter-integrated Circuit
LSB	Least Significant Bit
MD5	Message-Digest Algorithm
MSB	Most Significant Bit
NC	No Connect
PRNG	Pseudo-Random Number Generator
RoHS	Reduction of Hazardous Substances
SHA	Secure Hash Algorithm
SPI	Serial Peripheral Interface
SSEL	Slave Select
STP V3	SkyeTek Protocol Version 3
TTL	Transistor-transistor Logic

3 Ordering Information

3.1 Part Numbers

The M1-Mini part number is constructed according to the part number specification below:

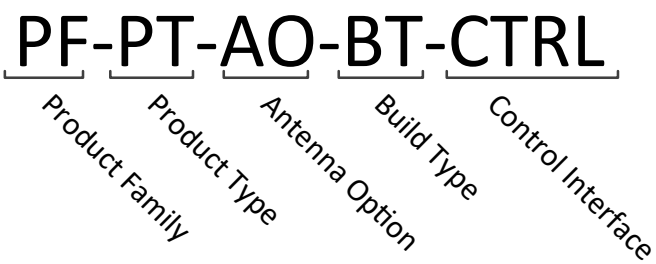

Figure 1: Part Number Format

Code	Options	Description
Product Family	SM = SkyeModule	Highest level product family code.
Product Type	MN = M1-Mini	Specifies the specific part type.
Antenna Option	Blank = Internal Antenna EX = External Antenna	Specifies antenna connection, default is Internal Antenna.
Build Type	SH = Shielded	Specifies hardware form factor.
Control Interface	Blank = Standard (TTL Serial) I^2C = Optional I^2C interface SPI = Future SPI Interface	Specifies control interface.

4 M1-Mini Overview

M1-Mini is the smallest multi-protocol radio frequency identification (RFID) read/write radio module in the market, complete with internal antenna. The M1-Mini is a multi-protocol RFID read/write module for use with most industry standard 13.56 megahertz (MHz) RFID tags and smart labels.

The extremely low-profile and low-power consumption of the M1-Mini makes it the ideal candidate for spatially constrained, power-sensitive applications. An internal LDO regulator provides a low-noise 3V system voltage.

The M1-Mini offers multiple antenna options including an onboard antenna, the ability to connect a custom external antenna, and the ability to utilize both the internal and external antennas together (though utilizing dual antenna configuration requires advanced RF knowledge).

Figure 2: M1-Mini Shielded

4.1 Features

- Tiny Footprint – 25.4 millimeter (mm) (1 inch) diameter
- Low Profile Shielded Version (2.8 mm [0.11 in.])
- High Frequency (HF) RFID Tag support including ISO15693 and ISO 18000-3
- Supports SkyeTek Protocol version 2.0
- Standard Host Interface options include TTL and, optionally, I^2C
- On-board antenna provides up to 60mm (~2-inch) range with credit-card size tags
- External antenna option with 50 Ohms output
- Low voltage 3.3 volt (V) operation for Li-Ion battery-powered and handheld devices
- Low-current consumption
- Enhanced Noise Filtering for better RF performance
- 48 mW output power into the external antenna

5 Mechanical Specifications

5.1 Dimensioned Drawings

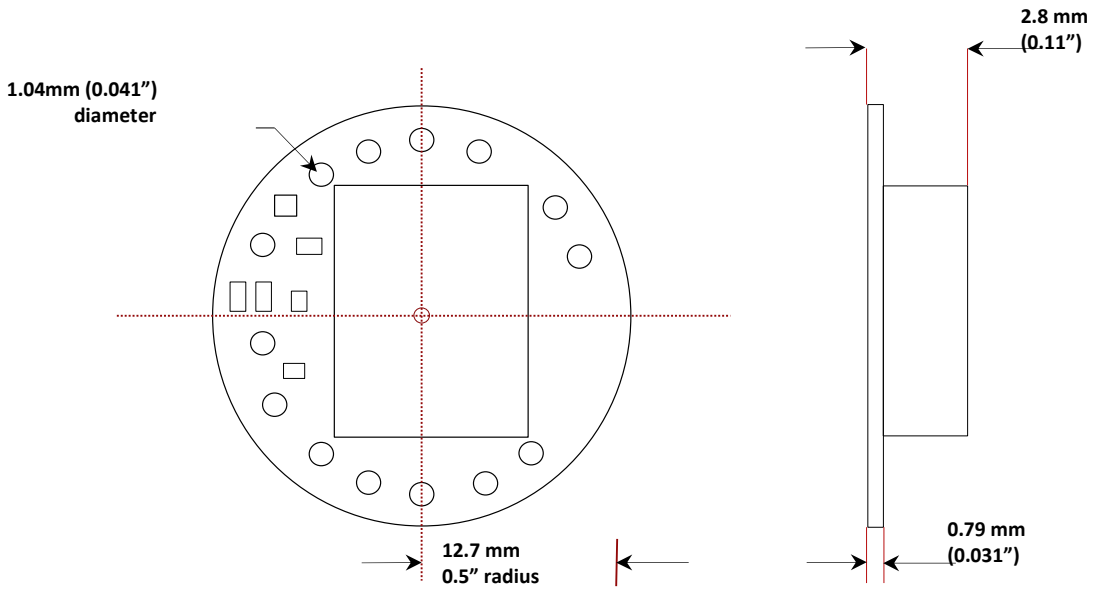

Figure 3: M1-Mini Shielded Dimensions

6 Pinning Information

6.1 Pin Locations

Table 6-1: Pin Locations

Peripheral Through Hole Via	Name	X (Inches)	Y (Inches)	Position on 12-Pin Connector
1	RF_GND	-0.290	0.315	1, 12
2	EXT_ANT	-0.370	0.230	
3	PGD (leave open)	-0.420	-0.120	
4	RST/	-0.335	-0.275	11
5	M1-SSN (RFU)	-0.225	-0.375	5
6	TX TTL / SCK / M1-SCLK (RFU)	-0.120	-0.420	8
7	RX TTL / SDA / M1-MOSI (RFU)	0.000	-0.430	7
8	M1-MISO (RFU)	0.120	-0.420	6
9	PGC (Leave Open)	0.225	-0.375	
10	COM_SEL1	0.420	0.120	3
11	COM_SEL2	0.370	0.230	4
12	Vin	0.100	0.420	2
13	DC_GND	0.000	0.430	1, 12
14	Vout	-0.100	0.420	10
15	SRVON (RFU)	-0.190	0.392	9

7 Environmental Specifications

7.1 Electrostatic Precautions

CAUTION – Failure to take proper electrostatic precautions may result in damage to or failure of your M1-Mini.

The M1-Mini contains static-sensitive parts. Observe the following precautions to prevent damage to these parts.

- Wear a static grounding strap when handling electronic control components
- Keep all plastic, vinyl, and Styrofoam (except anti-static versions) away from printed circuit boards.
- Do not touch the components or conductors on a printed circuit board with your hands or with conductive devices.

7.2 Temperature Ratings

Stresses beyond these ratings may cause permanent damage. Exposure to absolute maximum conditions for extended periods may degrade device reliability. These maximum stress ratings do not imply maximum operating conditions.

Table 7-1: Temperature Ratings

Specification	Rating
Temperature range	Temperature is 25 degrees Celsius unless otherwise noted
Operating	-10 to +70 degrees C
Storage	-20 to +85 degrees C

8 Electrical Specifications

This chapter discusses the electrical specifications of the M1-Mini at the temperature of 25 degree Celsius.

Table 8-1: Electrical Specifications

Specification	Min	Typ	Max	Units/Notes
RF Characteristics				
Frequency (Direct output)		13.56		MHz
Transmission Parameters				
RF Output Power		17		dBm
RF Output Nominal Impedance		50		Ohms
Logic Inputs				
High state input voltage	2.4		3.0	V
Low state input voltage	0.0		0.45	V
Input Current (IINH/IINL)	- 0.2		+ 0.2	mA
Logic Outputs				
Output High Voltage (VOH)	2.3	3		V
Output Low Voltage (VOL)		0	0.6	V
Output Current (IOH/IOL)	- 3.0		+ 8.5	mA
Power Supply				
VIN Input Voltage Range	3.2	5	6.0	V
Power Supply Current consumption at 5V				
Active (scanning)		64	70	mA
Idle		5.5		mA
Sleep		120		µA

8.1 Absolute Maximum Ratings

Stresses beyond these ratings may cause permanent damage. Exposure to absolute maximum conditions for extended periods may degrade device reliability. These maximum stress ratings do not imply maximum operating conditions.

Table 8-2: Maximum Voltage Ratings

Specification	Rating
Maximum power supply voltage	10 V
Digital I/O voltage to GND	-0.3 to 3.3V
Digital I/O current rating	± 20 mA

8.2 Power Supply Options

The power supply options for the M1-Mini are described in this section. The figure below shows an example the standard power configuration.

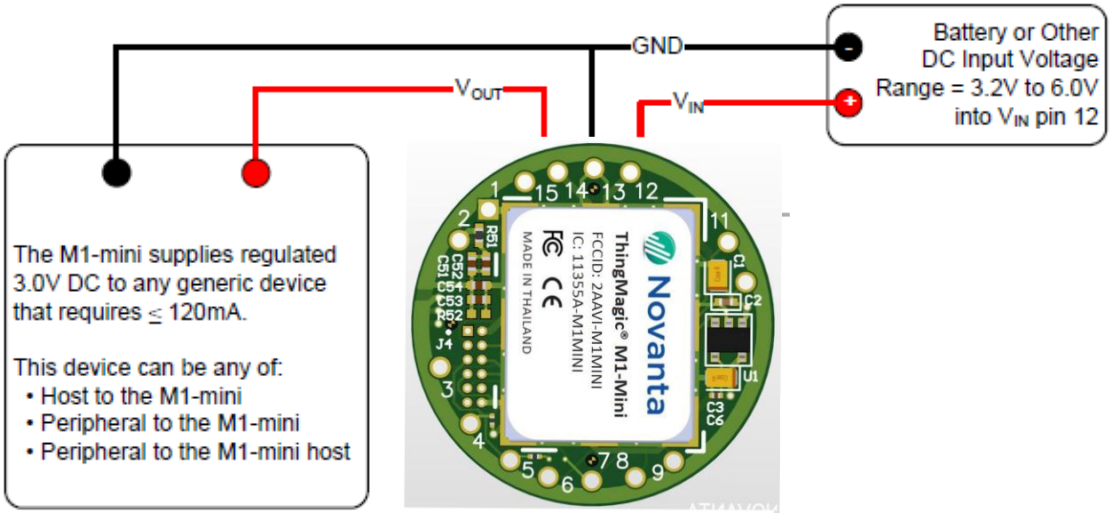

Figure 4: M1-Mini Powered at VIN ≤ 5V

The M1-mini uses an on-board linear voltage regulator (LDO) that generates VOUT = 3.0V at pin 14, from supply-voltage input to pin 12 within 3.2V ≤ VIN ≤ 6.0V.

9 Host Interface Specifications

The M1-Mini is supplied with TTL serial as the standard host interface. The I²C host interface type is also available. Host interface can be selected in Software or in Hardware by programming a System Memory parameter. The hardware method uses COM_SELx input pins.

9.1 TTL Serial

TTL signal levels of 0 to 3V are used to interface the M1-Mini to a host device. A three-wire serial connection is provided. The M1-Mini does not support RTS and CTS handshaking signals therefore Hardware Flow Control is not available.

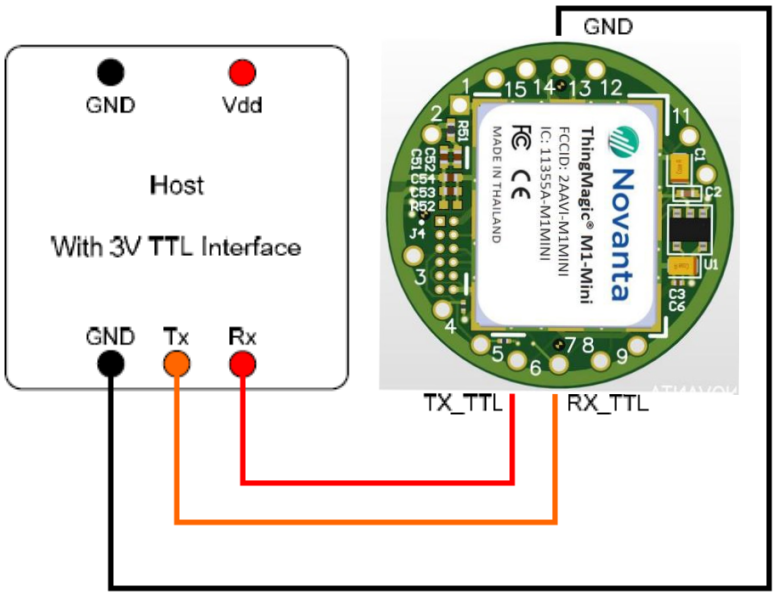

Figure 5: TTL Connection: M1-Mini to Host

- In addition to the signal connections, the host must supply input voltage.
- The serial baud rate of the M1-Mini is software selectable. The following table shows the selectable baud rates.

4800 bits/sec	N,8,1	+/- 0.3% error
9600 bits/sec	N,8,1	+/- 0.3% error
19200 bits/sec	N,8,1	+/- 0.3% error
38400 bits/sec	N,8,1	+/- 0.3% error
57600 bits/sec	N,8,1	+/- 1.9% error
115200 bits/sec	N,8,1	+/- 5.1% error

NOTE – N,8,1 means No Parity Bit, 8 Data Bits, 1 Stop Bit.

9.2 SPI

Not Currently Supported

9.3 I²C

The M1-Mini supports standard I²C for connecting to a host controller. The M1-Mini operates as an I²C slave device. Standard 2-wire connection is used with SCL and SDA. SCL is the bi-directional system clock line. SDA is the bi-directional serial data line. The I²C host interface must be selected in M1-Mini firmware to enable the I²C operation. Both I²C Fast mode at 400 kHz, or the slower I²C Normal mode at 100 kHz data rates are supported. The data is sent and received MSB first. Data exchange between the host and the M1-Mini is defined according to the SkyeTek Protocol, Binary mode.

NOTE – Loop and Inventory modes are not supported for the I²C Host Interface.

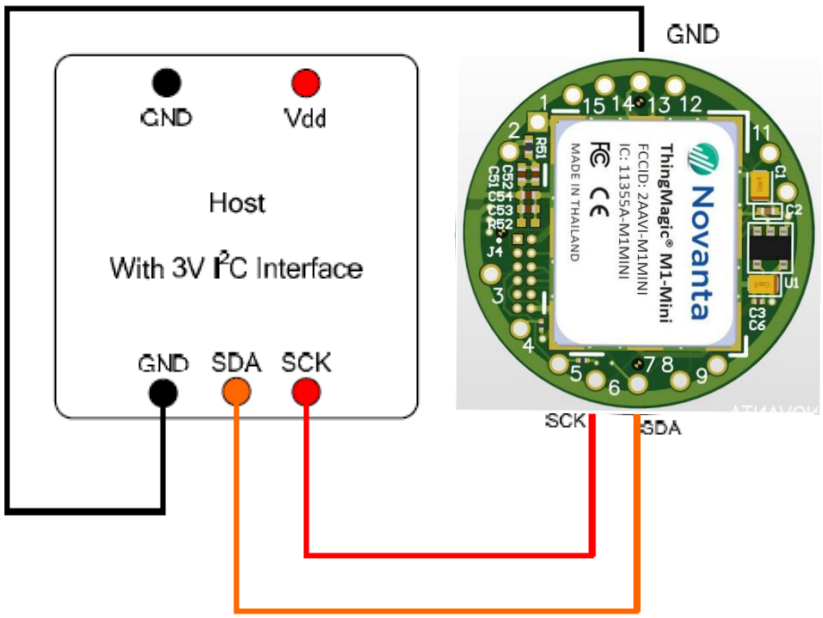

Figure 8: I2C Connection: M1-Mini to Host

- Both Normal mode at 100 kHz and Fast mode at 400kHz clock rates are supported.
- External pull up resistors to 3.0V are required but should be strong (less than or equal to 2.2kΩ) for the I²C to function properly.
- I²C address should be 0x3F; 7-bit address mode should be used.
- Write should be used for the request.
- Read should be used for the response.
- A delay of at least 25 milliseconds must be included between the request and response for tag commands to function properly.
- Be sure to read at least enough bytes to receive the entire response, including CRC, for each response sequence or future responses from the module may give unexpected results.

10 Radio Specifications and Regional Compliance

10.1 Agency Approval

As part of a host system, the M1-Mini will not interfere with the overall system's compliance with agency requirements for emissions and susceptibility.

Radio Specifications and Regional Compliance

- United States: FCC 15.225
- Europe: EN300-330, EN301-489, EN 61000-4-3, RoHS
- Australia/New Zealand: AS/NZS 4268:2003
- Taiwan: DGT LP002
- Hong Kong: HKTA 1035
- Singapore: IDA TS SRD

10.2 Modular Certifications

The M1-Mini has received the following modular certifications.

- United States: FCC 15.225
- ISED Canada RSS-210
- ETSI EN 300 330
- ETSI EN 301 489-1

10.3 Frequency Band

The M1-Mini operates in the 13.56MHz (+/- 7 KHz) ISM unlicensed band and is suitable for worldwide use. The frequency is not adjustable.

10.4 Tag Protocols

The M1-Mini supports ISO15693 tags. For the most current listing of supported tags and features, see the *M1 Mini Tag Support List*.

10.5 Communication Regulation Information

Contact rfid-support@jadaktech.com before beginning the process of getting regulatory approval for a finished product using the ThingMagic M1-Mini.

10.5.1 Federal Communication Commission (FCC) Interference Statement

The equipment has been tested and found to comply with the limits for a Class B digital device, pursuant to Part 15 of the FCC rules. These limits are designed to provide reasonable protection against harmful interference in a residential installation. This equipment generates, uses and can radiate radio frequency energy and, if not installed and used in accordance with the instructions, may cause harmful interference to radio communications. However, there is no guarantee that interference will not occur in a particular installation. If this equipment does cause harmful interference to radio or television reception, which can be determined by turning the equipment

OFF and ON, the user is encouraged to try to correct the interference by one of the following measures:

1. Reorient or relocate the receiving antenna.
2. Increase the separation between the equipment and receiver.
3. Connect the equipment into an outlet on a circuit different from that to which the receiver is connected.
4. Consult the dealer or an experienced radio/TV technician for help.

The device complies with Part 15 of the FCC rules. Operation is subject to the following two conditions:

1. This device may not cause harmful interference, and
2. This device must accept any interference received, including interference that may cause undesired operation.

FCC Caution: Any changes or modifications not expressly approved by the party responsible for compliance could avoid the user's authority to operate this equipment.

This transmitter module is authorized to be used in other devices only by OEM integrators under the following conditions:

1. To comply with Federal Communication Commission's (FCC) RF radiation exposure requirements, the antenna(s) used for this transmitter must be installed such that a minimum separation distance of 0 mm is maintained between the radiator (antenna) & user's/nearby people's body always and must not be co-located or operating in conjunction with any other antenna or transmitter.
2. The transmitter module must not be co-located with any other antenna or transmitter.

If the above two conditions are met, then further transmitter testing is not required. However, the OEM integrator is still responsible for testing their end-product for any additional compliance requirements required with this module installed (For example, digital emissions, PC peripheral requirements, etc.).
NOTE: In the event that these conditions cannot be met (for certain configurations or co-location with another transmitter), then the FCC authorization is no longer considered valid, and the FCC ID cannot be used on the final product. In these circumstances, the OEM integrator will be responsible for reevaluating the end product (including the transmitter) and obtaining a separate FCC authorization.

The OEM integrator must be aware not to provide information to the end user regarding how to install or remove this RF module in the user manual of the end product.

10.5.2 User Manual Requirements

The user manual for the end product must include the following information in a prominent location:
"To comply with FCC's RF radiation exposure requirements, the antenna(s) used for this transmitter must be installed such that a minimum separation distance of 0 mm is maintained between the radiator (antenna) & user's/nearby people's body at all times and must not be co-located or operating in conjunction with any other antenna or transmitter."

AND

The transmitting portion of this device carries with it the following two warnings:

“This device complies with Part 15 Class B of the FCC rules. Operation is subject to the following two conditions:

1. This device may not cause harmful interference, and
2. This device must accept any interference received, including interference that may cause undesired operation”.

AND

“Any changes or modifications to the transmitting module not expressly approved by Novanta could void the user’s authority to operate this equipment”.

10.5.3 FCC End Product Labeling

The final product must be labeled in a visible area with the following:

“Contains Transmitter Module FCC ID: 2AAVI-M1Mini”
Or
“Contains FCC ID: 2AAVI-M1Mini”

10.5.4 ISED Canada (English)

This radio transmitter (IC: 11355A-M1MINI) has been approved by ISED Canada to operate with the internal antenna.

Operation is subject to the following two conditions:

1. This device may not cause interference, and
2. This device must accept any interference, including interference that may cause undesired operation of the device.

For the Modular Certification to be valid, the final end product must be labeled in a visible area with the following:

“Contains Transmitter IC: 11355A-M1Mini”

10.5.5 ISDE Canada (French)

Le présent émetteur radio (IC: 11355A-M1MINI) a été approuvé par ISDE Canada pour fonctionner avec le antenne internal.

Le fonctionnement de l’ appareil est soumis aux deux conditions suivantes:

1. Cet appareil ne doit pas perturber les communications radio, et
2. Cet appareil doit supporter toute perturbation, y compris les perturbations qui pourraient provoquer son dysfonctionnement.

Marquage sur l’ étiquette du produit complet dans un endroit visible:

"Contient transmetteur, IC: 11355A-M1MINI"

11 Antenna Options

11.1 Read Range

In general, read range depends on the RFID Transponder's IC and antenna, and the RFID reader and reader antenna, in addition to the environment in which the system is implemented.

The M1-Mini has a read/write distance that is typically greater than or equal to 50.8 mm (2 inch) for a Texas Instruments Tag-It HF-I (ISO15693) RFID inlay with antenna dimensions 22.5 mm x 38 mm (TI p/n RI-I03-112A)

11.2 Antenna Configurations

By default the internal antenna of the M1-Mini is connected during production. In the event that the user wants to connect an external antenna between the INT and ANT pins of the M1-Mini, refer to Table 14-1.

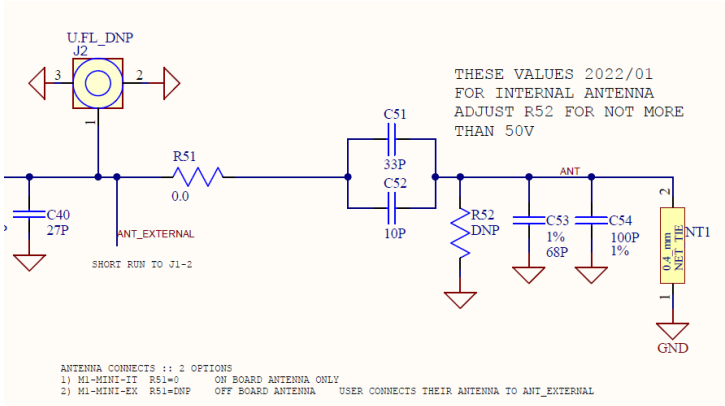

Figure 9: M1-Mini internal antenna schematic

Table 11-1: M1-Mini Internal Antenna Configuration Details

Internal Ant Active?	Custom External Antenna?	Model
N	Y	SM-MN-EX-SH or remove R51 from SM-MN-SH
Y	N	SM-MN-SH

NOTE – Place custom antenna between pin 2 (ANT) and pin 1 (GND). Refer to AN001 for more information on how to make your own custom antenna.

Optional U.FL External Connector

Rather than using the ANT and GND pins to connect an external antenna, a standard U.FL surface-mount connector may be attached to the bottom of the board at the location shown.

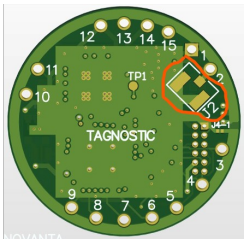

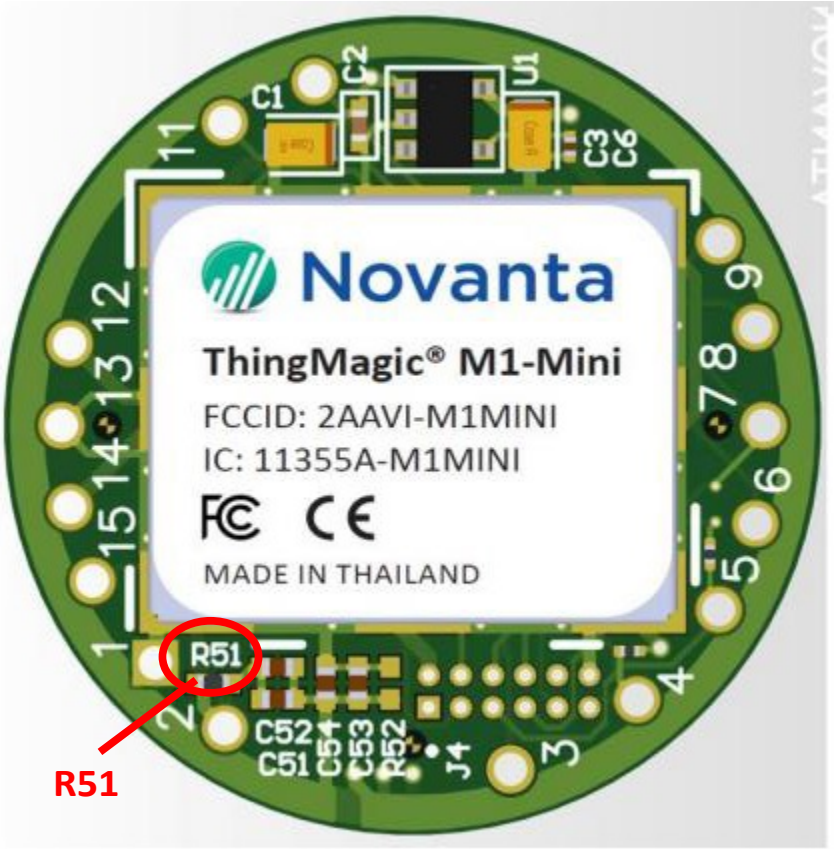

Figure 10: Component Positions on M1-Mini Shielded

12 Communication Specifications

12.1 SkyeTek Protocol v2

The M1-Mini device communicates with a host controller using the SkyeTek Protocol v2 for all host interfaces. The SkyeTek Protocol defines the data exchange between a host controller and a RFID radio module. It specifies how a host controller can address, configure and command a radio module in order to read and write to RFID tags and smart labels.

The following sections of this document explain a very basic overview of the protocol. Refer to the SkyeTek Protocol *v2 Guide* document for detailed information.

12.2 Request Formats

Flags	Cmd.	RID	Tag Type	TID	AFI	Starting Block	# of Blocks	Data	CRC
2	2	2	2	16	2	4	2	n	4

Table 12-1: Request Format (bytes), ASCII Mode

Msg. Len.	Flags	Cmd.	RID	Tag Type	TID	AFI	Starting Block	# of Blocks	Data	CRC
1	1	1	1	1	8	1	1	1	n	2

Table 12-2: Request Format (bytes), Binary Mode

	Optional fields (depending on the command and flags)
	Required Fields (must be present at all times)

12.3 Response Formats

Response Code	RID	Tag Type	Response Data	CRC
2	2	2	n	4

Table 12-3: Response Format (bytes), ASCII Mode

MSG Length	Response Code	RID	Tag Type	Response Data	CRC
1	1	1	1	n	2

Table 12-4: Response Format (bytes), Binary Mode

	Optional fields (depending on the command and flags)
	Required Fields (must be present at all times)

13 Customizing System Parameters

System parameters let you configure reader settings to customize the reader for your environment. All parameters can be changed in both volatile and non-volatile memory. When changing a parameter in volatile memory the change in the parameter is realized immediately, but is reset upon power-cycling the M1-Mini. Alternatively, when changing a parameter in non-volatile memory the change in the parameter is realized after power-cycling. The M1-Mini is power cycled immediately after the command is sent.

The following table summarizes the parameters for the M1-Mini.

Name	Parameter Address	Request Blocks	Length (bytes)	Parameter Values	Factory Default Parameter Value	Specifies	READ	WRITE
SERIAL NUMBER	0x00	2	4	0x00000000-0xFFFFFFFF	custom	serial number	custom	no
FIRMWARE VERSION	0x01	1	2	0x0000-0xFFFF	depends on release	firmware version	yes	no
READER ID (RID)	0x02	1	1	0x00-0xFF	0xFF (“no RID”)	reader network id	yes	yes
BAUD RATE	0x03	1	1	0xFF **0x00** 0x01 0x02 0x03 0x04-0xFE	**0x00**	4800 **9600** 19200 38400 57600 reserved	yes	yes
SLEEP MODE	0x04	1	1	0x00 0x01-0xFF	not applicable	sleep active	no	yes
Reserved	0x05-0x0A				None		no	no
HOST INTERFACE	0x0B			0x00 0x01 0x02 **0x03** 0x0F 0x04-0xFF (except 0x0F)	**0x03**	reserved I^2C reserved **TTL (UART)** COM_SEL** TTL (UART)	yes	yes
Reserved	0x0C–0x11				None		no	no
STARTUP COMMAND	0x12	1	1	see detailed description	0x00	see notes	no	yes
Reserved	0x13–0x80				None		no	no

** The host interface is selected in firmware based on the status of the **COM_SEL1** and **COM_SEL2** general purpose input pins.

Table 13-1: M1-Mini System Parameters

13.1 Changing System Parameters

CAUTION – Changing system parameter values – especially the default values – can render your M1-Mini non-operational in your environment. Research, record, and test all planned changes to make sure they are compatible with your system.

You can read or write system parameters via the following commands:

- Read System Parameter (0x22) – Reads the current value of the system parameter at the memory address specified.
- Write System Parameter (0x42) – Writes a new value to the system parameter at the memory address specified.
- Read Memory (0x21) – Reads the system parameter value at the address specified out of non-volatile memory.
- Write Memory (0x41) - Writes a new system parameter value to the non-volatile memory. This saves the setting even after a power cycle or reset.

See System Parameter Descriptions in section 13.2 for detailed information about individual parameters.

Also, see the *SkyeTek Protocol v2 Guide* for a full description of the system parameter commands.

CAUTION – Resetting (or cycling power) on your M1-Mini causes all system parameters to revert to their default values. Any changes made to system parameters in RAM are lost at reset unless you write them to the non-volatile memory as the new default values. Any changes to the default values will reset the reader. The new value is effective after reset.

13.2 System Parameter Descriptions

This section describes the M1-Mini system parameters in detail.

13.2.1 Serial Number

The Serial Number system parameter is a read only parameter set at manufacture time. It is not a unique number for each module. It can be set to a specific value upon request. By default, it is set to 0x00000000.

13.2.2 Firmware Version

The Firmware Version system parameter is a read-only parameter that contains a two-byte firmware version number. The firmware version number is read with a Read System command.

13.2.3 Reader ID

The Reader ID system parameter is a read/write system parameter that contains a one-byte Reader ID value. The Reader ID can be changed in both volatile memory (Write System command) and nonvolatile memory (Write Memory command). The Reader ID can be read out of either volatile (Read System command) or non-volatile memory (Read Memory command). All non-volatile writes are followed by a power cycle for the settings to take effect. Reader ID values can take on any value from 0x00-0xFF. 0xFF is the default and the reader responds to commands sent to it not containing the Reader ID. From this point forward examples some examples are in ASCII mode and some are in binary mode.

13.2.4 Baud Rate

The Baud Rate system parameter controls the baud rate for serial data communication. The TTL serial interface. The following table contains the possible values for the data field.

Baud Rate	Data Field
4800	0xFF
9600	0x00
19200	0x01
38400	0x02
57600	0x03
115200	0x04

Table 13-2: Baud Rate Parameter Settings

13.2.5 Sleep Mode

The reader can be set to a low power sleep mode through software using this system parameter. Sleep mode is activated by setting this system parameter to 0x00. Sleep is explained in detail in the Operating Modes section of the document, specifically section 14.1.

13.2.6 Host Interface

The Host Interface system parameter allows the user to select the host interface. The host interface can be changed in both volatile memory (Write System command) and nonvolatile memory (Write Memory command). It can be read out of either volatile (Read System command) or non-volatile memory (Read Memory command). All non-volatile writes are followed by a power cycle for the selection to take effect. The host interface values can take any value from 0x00-0x03 and 0x0F. 0x03 is the default for TTL host interface.

When the host interface parameter value is set as 0x0F, the M1-Mini firmware reads the state of two general purpose input pins **COM_SEL1** and **COM_SEL2** during initialization and sets the host interface based on their values.

COM_SEL2	COM_SEL1	Host Interface
0	0	Reserved
0	1	I^2C
1	0	Reserved
1	1	TTL (UART)

13.2.7 Startup Command

The Startup Command system parameter allows the user to set any command to run at module power up. This command can be very useful in battery powered or otherwise power sensitive applications as it minimizes runtime. The full functionality of this system parameter including examples is explained in detail in the Operating Modes section of the document, specifically section 0.

14 Operating Modes

The M1-Mini has three operating modes: Sleep, Active, and Loop. Active is the normal mode of operation. The following sections explain the Sleep and Loop modes as well as how to set a specific command to run on startup using the Startup Command system parameter.

14.1 Sleep Mode

The low-power Sleep mode can be used to conserve battery or system power.

The reader can be put into Sleep mode by writing the Data 0x00 to the Sleep Mode system parameter using the Write System command. After the reader gives a positive response, it enters Sleep mode. Any command wakes the reader from Sleep mode. Even sending a single byte to the reader wakes it from Sleep mode. The reader gives the same positive response upon waking from Sleep mode as it gives upon entering Sleep mode.

14.1.1 Write System Parameter – Sleep Mode Example (ASCII)

The following request puts the reader into Sleep mode if it is in active mode, and brings it out of Sleep mode if the reader is already in Sleep mode.

		Flag	Command	Starting Block	Number of Blocks	Data	CRC	
Request	<CR>	20	42	04	01	00	35E9	<CR>

		Response	CRC	
Response	<LF>	42	6116	<CR><LF>

14.1.2 Write System Parameter – Sleep Mode Example (Binary)

The following request puts the reader into Sleep mode if it is in active mode, and brings it out of Sleep mode if the reader is already in sleep mode.

		Length	Flag	Command	Starting Block	Number of Blocks	Data	CRC
Request	<STX>	0x07	0x20	0x42	0x04	0x01	0x00	0x2938

		Length	Response	CRC
Response	<STX>	0x03	0x42	0x4B7E

14.1.3 Write Memory – Sleep Mode Example (Binary)

The following request puts the reader into Sleep mode upon power up. This process is done provided that no startup command is stored using the Startup Command system parameter.

		Flag	Command	Starting Block	Number of Blocks	Data	
Request	<CR>	00	41	04	01	00	<CR>

		Response	
Response	<LF>	41	<CR><LF>

14.2 Loop Mode

Loop mode allows the user to send a single select tag command to the reader and receive responses from the reader each time a tag is present in the field with no further requests necessary. The loop flag is used in conjunction with the Select Tag command to set the reader into Loop mode.

NOTE – Loop Mode is not supported for the SPI or I ^{2}C host interface.

14.2.1 Select Tag – Loop Mode Example (ASCII)

The following request initiates Loop Mode with Auto-detect selected as the tag type:

		Flag	Command	Tag Type	
Request	<CR>	01	14	00	<CR>

		Response	
Response	<LF>	1C	<CR><LF>

The response 1C is immediately sent to indicate that the reader has successfully entered loop mode.

The following responses will be received when an ISO-15693 tag is introduced into the reader's field. The responses below show the tag being read three times:

		Response	Tag Type	Data (TID)	
Response	<LF>	14	01	E0 07 00 00 01 64 5E 37	<CR><LF>
Response	<LF>	14	01	E0 07 00 00 01 64 5E 37	<CR><LF>
Response	<LF>	14	01	E0 07 00 00 01 64 5E 37	<CR><LF>

14.2.2 Select Tag – Loop Mode Example (Binary)

The following request initiates Loop Mode with Auto-detect selected as the tag type:

		Length	Flag	Command	Tag Type	CRC
Request	<STX>	0x05	0x21	0x14	0x00	0xC541

		Length	Response	CRC
Response	<STX>	0x03	0x1C	0xF085

The response 1C is immediately sent to indicate that the reader has successfully entered loop mode.

The following responses will be received when an ISO-15693 tag is introduced into the reader's field. The responses below show the tag being read three times:

		Length	Response	Tag Type	Data (TID)	CRC
Response	<STX>	0x0C	0x14	0x01	E0 04 01 00 08 AE D8 BD	0xBBF3
Response	<STX>	0x0C	0x14	0x01	E0 04 01 00 08 AE D8 BD	0xBBF3
Response	<STX>	0x0C	0x14	0x01	E0 04 01 00 08 AE D8 BD	0xBBF3

14.3 Startup Command

The M1-Mini has a provision to store a single command that is executed upon power up. This command is stored by writing to the Startup Command system parameter using the Write System command. The M1-Mini executes the command upon power up and sends the response in either Binary or ASCII mode depending on the mode in which the command was stored.

The entire command must be stored—all the fields relevant to the command must be present. For example if the CRC, TID and/or RID flags are set, then the respective fields must have the correct information. In the case of Binary mode, the message length must also be stored as part of the command. The delimiting characters (<CR> in ASCII mode and <STX> in Binary mode) should not be stored.

This system parameter can only be written for the Write System command, so there is no Read System and Write/Read Memory support for this system parameter.

If no command needs to be executed upon power up, then a single-byte data value should be written to this system parameter. This process turns off the Start Up command functionality. The single byte can be any value, for example 0x00 – 0xFF.

14.3.1 Write System Parameter – Startup Command Example (ASCII)

The following request stores the Select Tag (0x14) command with tag type ISO-15693 (0x01) to be executed upon startup. Since the command is stored in ASCII mode, the response upon power up is sent in ASCII mode.

		Flag	Command	Starting Block	Number of Blocks	Data	
Request	<CR>	00	42	12	01	00 14 01	<CR>

		Response	
Response	<LF>	42	<CR><LF>

14.3.2 Write System Parameter – Startup Command Example (Binary)

The following request stores the select tag command (0x14) with the tag type set to Auto-Detect (0x00). The flags field in the command, which is stored, shows that the CRC and the Loop flags are set (0x21). This process causes the reader to go into loop mode upon power up and sends responses in Binary mode along with the CRC. The message length (0x05) is also stored along with the rest of the command because it is part of any command sent in Binary mode.

		Length	Flag	Command	Starting Block	Number of Blocks	Data	CRC
Request	<STX>	0x0C	0x20	0x42	0x12	0x01	0x05211400C541	0xD591

		Length	Response	CRC
Response	<STX>	0x03	0x42	0x4B7E

14.3.3 Write System Parameter – Disable Startup Command Functionality (ASCII)

The following request turns off the Start Up command functionality. It is sent in ASCII mode.

		Flag	Command	Starting Block	Number of Blocks	Data	
Request	<CR>	00	42	12	01	00	<CR>

		Response	
Response	<LF>	42	<CR><LF>