FCC Test Report

FCC ID: 2AAWC-I896QW

Product: Detachable Laptop

Trade Name: iVIEW

Model Number: i896QW

Serial Model: N/A

Report No.: NTEK- 2016NT08168320F4

Prepared for

WILTRONIC CORPORATION

13939 Central Ave, Chino, CA, United States, 91710

Prepared by

NTEK Testing Technology Co., Ltd.

1/F, Building E, Fenda Science Park, Sanwei Community, Xixiang Street,
Bao'an District, Shenzhen P.R. China

Tel.: +86-0755-61156588 Fax.: +86-0755-61156599
Website: www.ntek.org.cn

TEST RESULT CERTIFICATION

Applicant's name ..... : Wiltronic Corporation

Address ..... : 13939 Central Ave, Chino, CA, United States, 91710

Manufacturer's Name ..... : Wiltronic Corporation

Address ..... : 13939 Central Ave, Chino, CA, United States, 91710

Product description

Product name ..... : Detachable Laptop

Model and/or type reference : i896QW

Standards ..... : FCC Part15B:01 Oct.2016
ANSI C63.4:2014

This device described above has been tested by NTEK, and the test results show that the equipment under test (EUT) is in compliance with Part 15 of FCC Rules. And it is applicable only to the tested sample identified in the report.

This report shall not be reproduced except in full, without the written approval of NTEK, this document may be altered or revised by NTEK, personnel only, and shall be noted in the revision of the document.

Date of Test .....:

Date (s) of performance of tests .....: 16 Aug. 2016 ~ 29 Aug. 2016

Date of Issue.....: 29 Aug. 2016

Test Result.....: **Pass**

Testing Engineer : Lake. Xie

(Lake Xie)

Technical Manager : Jason chen

(Jason Chen)

Authorized Signatory : Sam. Chen

(Sam Chen)

Table of Contents **Page**

1 . TEST SUMMARY 4

1.1 TEST FACILITY 5

1.2 MEASUREMENT UNCERTAINTY 5

2 . GENERAL INFORMATION 6

2.1 GENERAL DESCRIPTION OF EUT 6

2.2 DESCRIPTION OF TEST SETUP 8

2.3 DESCRIPTION TEST PERIPHERAL AND EUT PERIPHERAL 9

2.4 MEASUREMENT INSTRUMENTS LIST 10

3 . EMC EMISSION TEST 11

3.1 CONDUCTED EMISSION MEASUREMENT 11

3.1.1 POWER LINE CONDUCTED EMISSION 11

3.1.2 TEST PROCEDURE 12

3.1.3 TEST SETUP 12

3.1.4 EUT OPERATING CONDITIONS 12

3.1.5 TEST RESULTS 13

3.2 RADIATED EMISSION MEASUREMENT 17

3.2.1 LIMITS OF RADIATED EMISSION MEASUREMENT 17

3.2.2 TEST PROCEDURE 17

3.2.3 TEST SETUP 18

3.2.4 TEST RESULTS 19

3.2.5 TEST RESULTS(1000~12400MHz) 21

4 . EUT TEST PHOTO 22

1. TEST SUMMARY

Test procedures according to the technical standards:

EMC Emission				
Standard	Test Item	Limit	Judgment	Remark
FCC Part15B:2014 ANSI C63.4: 2014	Conducted Emission	Class B	PASS	
	Radiated Emission	Class B	PASS	

NOTE:

(1) 'N/A' denotes test is not applicable in this Test Report

(2) For client's request and manual description, the test will not be executed.

1.1 TEST FACILITY

NTEK Testing Technology Co., Ltd
Add. : 1/F, Building E, Fenda Science Park, Sanwei Community, Xixiang Street, Bao'an District, Shenzhen P.R. China.
FCC Registration Number:238937; IC Registration Number:9270A-1
CNAS Registration Number:L5516

1.2 MEASUREMENT UNCERTAINTY

The reported uncertainty of measurement **y** ± **U**, where expended uncertainty **U** is based on a standard uncertainty multiplied by a coverage factor of **k=2**, providing a level of confidence of approximately **95** %.

A. Conducted Measurement :

Test Site	Method	Measurement Frequency Range	U, (dB)	NOTE
NTEKC01	ANSI	150 KHz ~ 30MHz	3.2	

B. Radiated Measurement :

Test Site	Method	Measurement Frequency Range	U, (dB)	NOTE
NTEKA01	ANSI	30MHz ~ 1000MHz	4.7	
		1GHz ~12.4GHz	5.0	

2. GENERAL INFORMATION

2.1 GENERAL DESCRIPTION OF EUT

<table>
<tr><td>Equipment</td><td>Detachable Laptop</td></tr>
<tr><td>Trade Name</td><td>iVIEW</td></tr>
<tr><td>Model Name</td><td>i896QW</td></tr>
<tr><td>Serial Model</td><td>N/A</td></tr>
<tr><td>Model Difference</td><td>N/A</td></tr>
<tr><td>Product Description</td><td>The EUT is a Industrial Detachable Laptop.
<table>
<tr><td>Connecting I/O port:</td><td>USB, Earphone</td></tr>
<tr><td>Operation Frequency:</td><td>BT:2402~2480 MHz
WIFI:802.11b/g/n(20MHz): 2412~2462MHz
802.11n(40MHz):2422~2452MHz</td></tr>
<tr><td>Modulation Type:</td><td>BT(1Mbps)/BLE: GFSK
BT EDR(2Mbps): π/4-DQPSK
BT EDR(3Mbps): 8-DPSK
IEEE 802.11b :
DSSS (CCK, QPSK, DBPSK)
IEEE 802.11g/n (HT20/HT0) : OFDM
(64QAM, 16QAM, QPSK, BPSK)</td></tr>
</table></td></tr>
<tr><td>Power Source</td><td>DC Voltage</td></tr>
<tr><td>Adapter</td><td>Model: JK050200-S04USA
Input: 100-240V~, 50/60Hz, 0.5A
Output: DC 5V⎓ 2000mA</td></tr>
<tr><td>Battery</td><td>DC 3.7V, 6000mAh</td></tr>
</table>

2.1.1 DESCRIPTION OF TEST MODES

To investigate the maximum EMI emission characteristics generates from EUT, the test system was pre-scanning tested base on the consideration of following EUT operation mode or test configuration mode which possible have effect on EMI emission level. Each of these EUT operation mode(s) or test configuration mode(s) mentioned above was evaluated respectively.

Pretest Mode	Description
Mode 1	Connect to PC
Mode 2	Camera
Mode 3	TF card Play
Mode 4	“H” Pattern

For Conducted Test	
Final Test Mode	Description
Mode 1	Connect to PC
Mode 2	Camera
Mode 3	TF card Play
Mode 4	“H” Pattern

For Radiated Test	
Final Test Mode	Description
Mode 1	Connect to PC
Mode 2	Camera
Mode 3	TF card Play
Mode 4	“H” Pattern

Note: Final Test Mode: Through Pre-scan, find the mode 1 is the worst case.
Only the worst case mode is recorded in the report.

2.2 DESCRIPTION OF TEST SETUP

RE

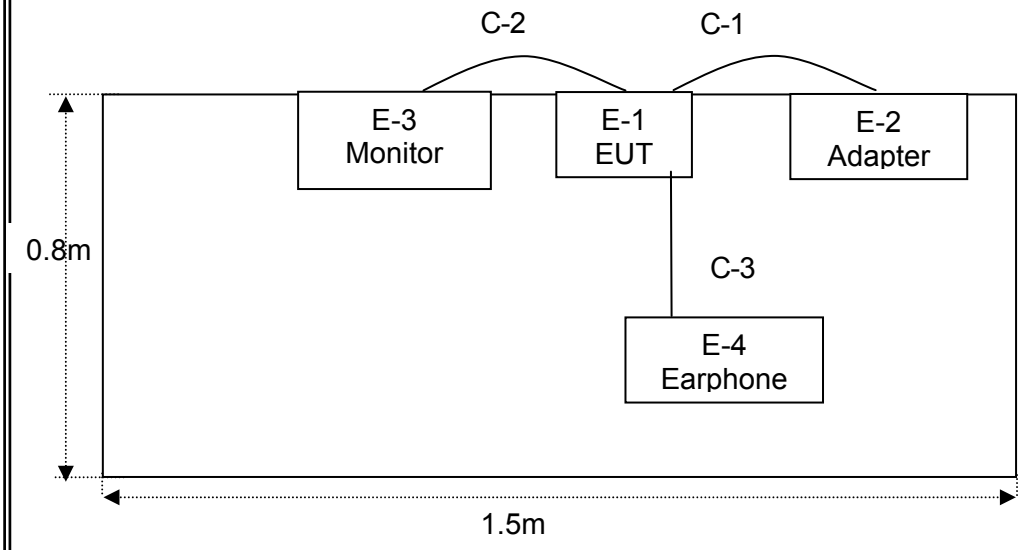

CE

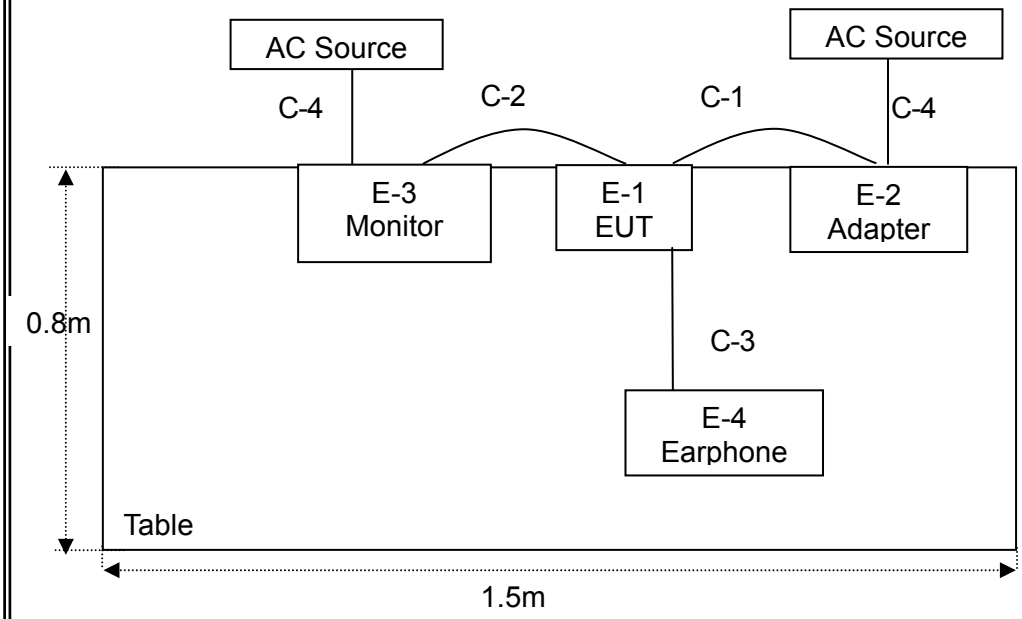

2.3 DESCRIPTION TEST PERIPHERAL AND EUT PERIPHERAL

The EUT has been tested as an independent unit together with other necessary accessories or support units. The following support units or accessories were used to form a representative test configuration during the tests.

Item	Equipment	Brand	Model/Type No.	Series No.	Note
E-1	Detachable Laptop	iVIEW	i896QW	N/A	EUT
E-2	Adapter	N/A	JK050200-S04USA	N/A	
E-3	Monitor	DELL	IN2020MB	cn-0y6mhx-74261-11f-67e s	
E-4	Earphone	N/A	2688	N/A	

Item	Cable Type	Shielded Type	Ferrite Core	Length	Note
C-1	Adapter Cable	unshielded	NO	1.0m	
C-2	VGA	unshielded	NO	1.0m	
C-3	USB Cable	unshielded	NO	1.2m	
C-4	Power Line	unshielded	NO	1.2m	

Note:

(1) The support equipment was authorized by Declaration of Confirmation.
(2) For detachable type I/O cable should be specified the length in cm in 『Length』 column.
(3) “YES” means “shielded” “with core”; “NO” means “unshielded” “without core”.

2.4 MEASUREMENT INSTRUMENTS LIST

Radiation Test equipment

Item	Kind of Equipment	Manufacturer	Type No.	Serial No.	Last calibration	Calibrated until	Calibration period
1	Spectrum Analyzer	Agilent	E4407B	MY45108040	2016.07.06	2017.07.05	1 year
2	Test Receiver	R&S	ESPI	101318	2016.06.07	2017.06.06	1 year
3	Bilog Antenna	TESEQ	CBL6111D	31216	2016.07.06	2017.07.05	1 year
4	50Ω Coaxial Switch	Anritsu	MP59B	6200264416	2016.06.07	2017.06.06	1 year
5	Spectrum Analyzer	ADVANTEST	R3132	150900201	2016.06.07	2017.06.06	1 year
6	Horn Antenna	EM	EM-AH-10180	2011071402	2016.07.06	2017.07.05	1 year
7	Horn Ant	Schwarzbeck	BBHA 9170	9170-181	2016.07.06	2017.07.05	1 year
8	Amplifier	EM	EM-30180	060538	2015.12.22	2016.12.21	1 year
9	Loop Antenna	ARA	PLA-1030/B	1029	2016.06.07	2017.06.06	1 year
10	Power Meter	R&S	NRVS	100696	2016.07.06	2017.07.05	1 year
11	Power Sensor	R&S	URV5-Z4	0395.1619.05	2016.07.06	2017.07.05	1 year
12	Test Cable	N/A	R-01	N/A	2016.07.06	2017.07.05	1 year
13	Test Cable	N/A	R-02	N/A	2016.07.06	2017.07.05	1 year

Conduction Test equipment

Item	Kind of Equipment	Manufacturer	Type No.	Serial No.	Last calibration	Calibrated until	Calibration period
1	Test Receiver	R&S	ESCI	101160	2016.06.07	2017.06.06	1 year
2	LISN	R&S	ENV216	101313	2015.08.24	2017.08.23	1 year
3	LISN	EMCO	3816/2	00042990	2015.08.24	2017.08.23	1 year
4	50Ω Coaxial Switch	Anritsu	MP59B	6200264417	2016.06.07	2017.06.06	1 year
5	Passive Voltage Probe	R&S	ESH2-Z3	100196	2016.06.07	2017.06.06	1 year
6	Absorbing clamp	R&S	MOS-21	100423	2016.06.07	2017.06.06	1 year
7	Test Cable	N/A	C01	N/A	2016.06.07	2017.06.06	1 year
8	Test Cable	N/A	C02	N/A	2016.06.07	2017.06.06	1 year
9	Test Cable	N/A	C03	N/A	2016.06.07	2017.06.06	1 year

3. EMC EMISSION TEST

3.1 CONDUCTED EMISSION MEASUREMENT

3.1.1 POWER LINE CONDUCTED EMISSION (Frequency Range 150KHz-30MHz)

FREQUENCY (MHz)	Class A (dBuV)		Class B (dBuV)	
	Quasi-peak	Average	Quasi-peak	Average
0.15 -0.5	79.00	66.00	66 - 56 *	56 - 46 *
0.50 -5.0	73.00	60.00	56.00	46.00
5.0 -30.0	73.00	60.00	60.00	50.00

Note:

(1) The tighter limit applies at the band edges.

(2) The limit of " * " marked band means the limitation decreases linearly with the logarithm of the frequency in the range.

The following table is the setting of the receiver

Receiver Parameters	Setting
Attenuation	10 dB
Start Frequency	0.15 MHz
Stop Frequency	30 MHz
IF Bandwidth	9 kHz

3.1.2 TEST PROCEDURE

a. The EUT was placed 0.8 meters from the horizontal ground plane with EUT being connected to the power mains through a line impedance stabilization network (LISN). All other support equipments powered from additional LISN(s). The LISN provide 50 Ohm/ 50uH of coupling impedance for the measuring instrument.
b. Interconnecting cables that hang closer than 40 cm to the ground plane shall be folded back and forth in the center forming a bundle 30 to 40 cm long.
c. I/O cables that are not connected to a peripheral shall be bundled in the center. The end of the cable may be terminated, if required, using the correct terminating impedance. The overall length shall not exceed 1 m.
d. LISN at least 80 cm from nearest part of EUT chassis.
e. For the actual test configuration, please refer to the related Item –EUT Test Photos.

3.1.3 TEST SETUP

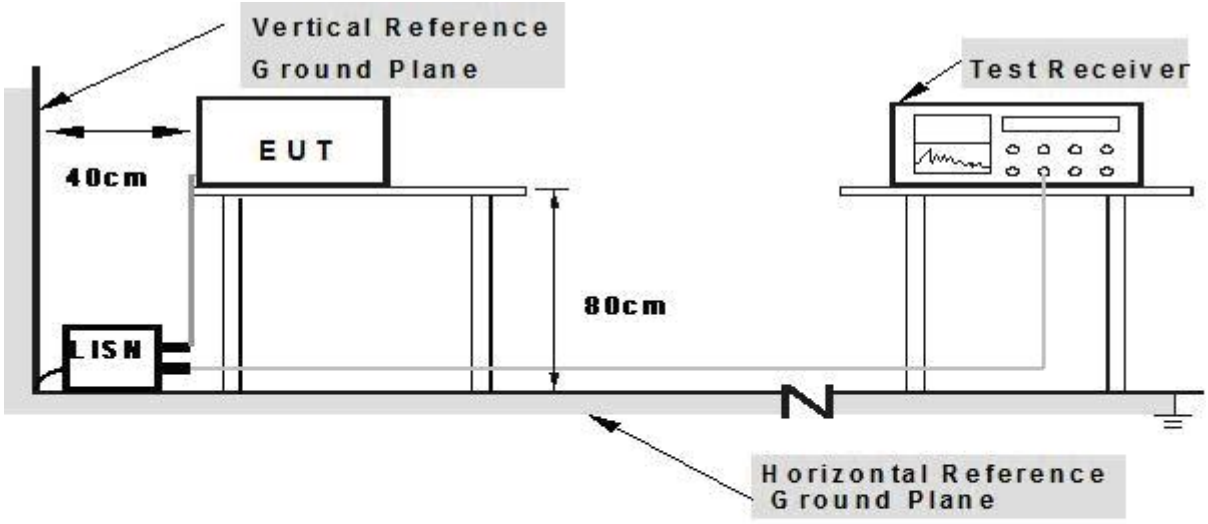

Note: 1.Support units were connected to second LISN.
2.Both of LISNs (AMN) are 80 cm from EUT and at least 80 from other units and other metal planes

3.1.4 EUT OPERATING CONDITIONS

The EUT tested system was configured as the statements of **2.3** Unless otherwise a special operating condition is specified in the follows during the testing.

3.1.5 TEST RESULTS

EUT:	Detachable Laptop	Model Name. :	i896QW
Temperature:	26 ℃	Relative Humidity:	54%
Pressure:	1010hPa	Test Date:	2016-8-24
Test Mode:	Mode 1	Phase :	L
Test Voltage:	DC 5V From Adapter AC 120V/60Hz		

Frequency (MHz)	Reading Level (dBμV)	Correct Factor (dB)	Measure-ment (dBμV)	Limits (dBμV)	Margin (dB)	Remark
0.159	47.48	10.12	57.60	65.51	-7.91	QP
0.159	36.33	10.12	46.45	55.51	-9.06	AVG
0.207	45.47	10.13	55.60	63.32	-7.72	QP
0.2071	19.97	10.13	30.10	53.32	-23.22	AVG
0.462	31.16	9.90	41.06	56.66	-15.60	QP
0.4778	5.81	9.86	15.67	46.38	-30.71	AVG
0.7058	31.01	9.79	40.80	56.00	-15.20	QP
0.7058	13.23	9.79	23.02	46.00	-22.98	AVG
1.5859	38.89	9.81	48.70	56.00	-7.30	QP
1.61	21.19	9.81	31.00	46.00	-15.00	AVG
7.5	47.05	9.85	56.90	60.00	-3.10	QP
7.5019	31.57	9.85	41.42	50.00	-8.58	AVG

Remark:

1. All readings are Quasi-Peak and Average values.
2. Factor = Insertion Loss + Cable Loss.

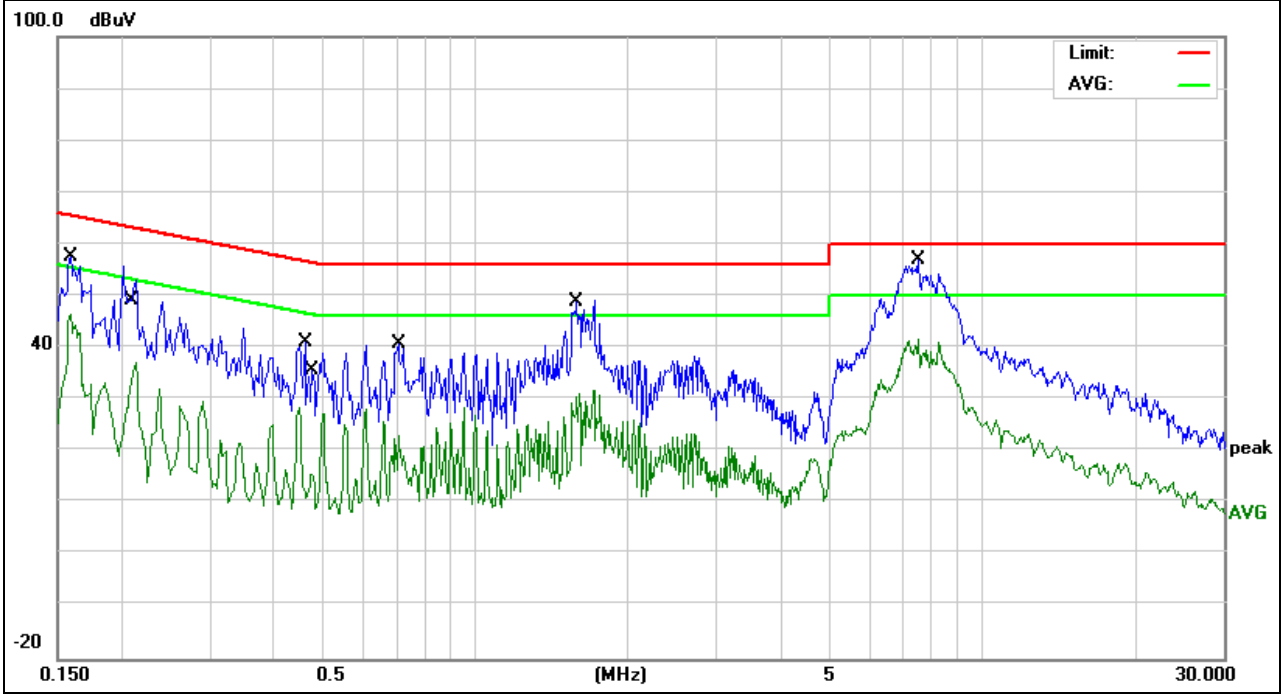

EUT:	Detachable Laptop	Model Name. :	i896QW
Temperature:	26 ℃	Relative Humidity:	54%
Pressure:	1010hPa	Test Date:	2016-8-24
Test Mode:	Mode 1	Phase :	N
Test Voltage:	DC 5V From Adapter AC 120V/60Hz		

Frequency (MHz)	Reading Level (dBμV)	Correct Factor (dB)	Measure-ment (dBμV)	Limits (dBμV)	Margin (dB)	Remark
0.165	47.34	10.06	57.40	64.96	-7.56	QP
0.17	32.45	10.06	42.51	55.20	-12.69	AVG
0.194	44.05	10.03	54.08	63.86	-9.78	QP
0.198	25.64	10.02	35.66	53.69	-18.03	AVG
0.3458	37.72	10.09	47.81	58.87	-11.06	QP
0.3537	15.21	10.09	25.30	49.06	-23.76	AVG
0.506	33.17	9.83	43.00	56.00	-13.00	QP
0.502	18.87	9.83	28.70	46.00	-17.30	AVG
1.6658	38.18	9.82	48.00	56.00	-8.00	QP
1.6658	22.87	9.82	32.69	46.00	-13.31	AVG
7.4378	46.30	9.82	56.12	60.00	-3.88	QP
7.4378	33.11	9.82	42.93	50.00	-7.07	AVG

Remark:

1. All readings are Quasi-Peak and Average values.
2. Factor = Insertion Loss + Cable Loss.

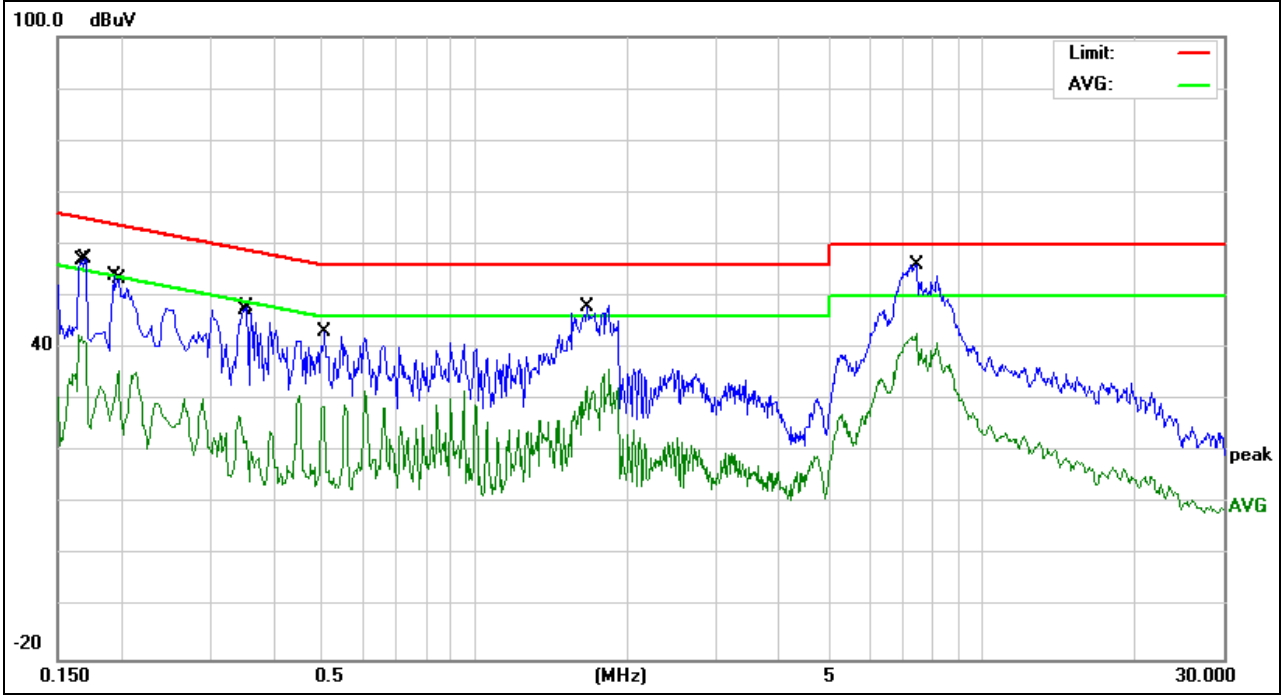

EUT:	Detachable Laptop	Model Name. :	i896QW
Temperature:	26 ℃	Relative Humidity:	54%
Pressure:	1010hPa	Test Date:	2016-8-24
Test Mode:	Mode 1	Phase :	L
Test Voltage:	DC 5V From Adapter AC 240V/60Hz		

Frequency (MHz)	Reading Level (dBμV)	Correct Factor (dB)	Measure-ment (dBμV)	Limits (dBμV)	Margin (dB)	Remark
0.2059	46.05	10.13	56.18	63.37	-7.19	QP
0.2059	28.94	10.13	39.07	53.37	-14.30	AVG
0.25	43.77	10.14	53.91	61.75	-7.84	QP
0.25	23.35	10.14	33.49	51.75	-18.26	AVG
0.3619	39.16	10.08	49.24	58.68	-9.44	QP
0.3619	15.72	10.08	25.80	48.68	-22.88	AVG
0.45	36.23	9.93	46.16	56.87	-10.71	QP
0.45	19.57	9.93	29.50	46.87	-17.37	AVG
1.622	38.25	9.81	48.06	56.00	-7.94	QP
1.6779	22.85	9.80	32.65	46.00	-13.35	AVG
7.4778	45.75	9.85	55.60	60.00	-4.40	QP
7.4778	30.76	9.85	40.61	50.00	-9.39	AVG

Remark:

1. All readings are Quasi-Peak and Average values.
2. Factor = Insertion Loss + Cable Loss.

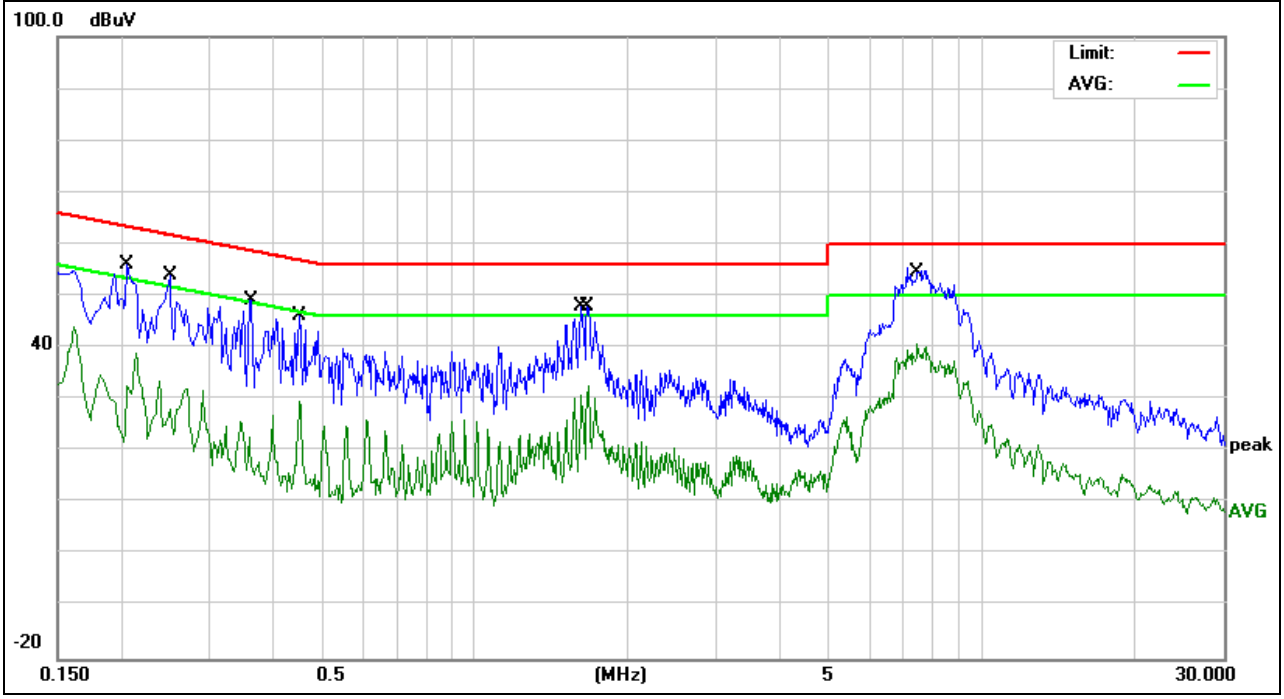

EUT:	Detachable Laptop	Model Name. :	i896QW
Temperature:	26 ℃	Relative Humidity:	54%
Pressure:	1010hPa	Test Date:	2016-8-24
Test Mode:	Mode 1	Phase :	N
Test Voltage:	DC 5V From Adapter AC 240V/60Hz		

Frequency (MHz)	Reading Level (dBμV)	Correct Factor (dB)	Measure-ment (dBμV)	Limits (dBμV)	Margin (dB)	Remark
0.152	48.05	10.08	58.13	65.88	-7.75	QP
0.159	30.40	10.07	40.47	55.51	-15.04	AVG
0.1883	45.97	10.03	56.00	64.11	-8.11	QP
0.1883	32.15	10.03	42.18	54.11	-11.93	AVG
0.246	42.39	10.07	52.46	61.89	-9.43	QP
0.246	20.39	10.07	30.46	51.89	-21.43	AVG
0.346	39.63	10.09	49.72	59.06	-9.34	QP
0.346	17.56	10.09	27.65	49.06	-21.41	AVG
1.666	38.18	9.82	48.00	56.00	-8.00	QP
1.666	23.45	9.82	33.27	46.00	-12.73	AVG
8.1219	45.76	9.84	55.60	60.00	-4.40	QP
8.1899	32.50	9.84	42.34	50.00	-7.66	AVG

Remark:

1. All readings are Quasi-Peak and Average values.
2. Factor = Insertion Loss + Cable Loss.

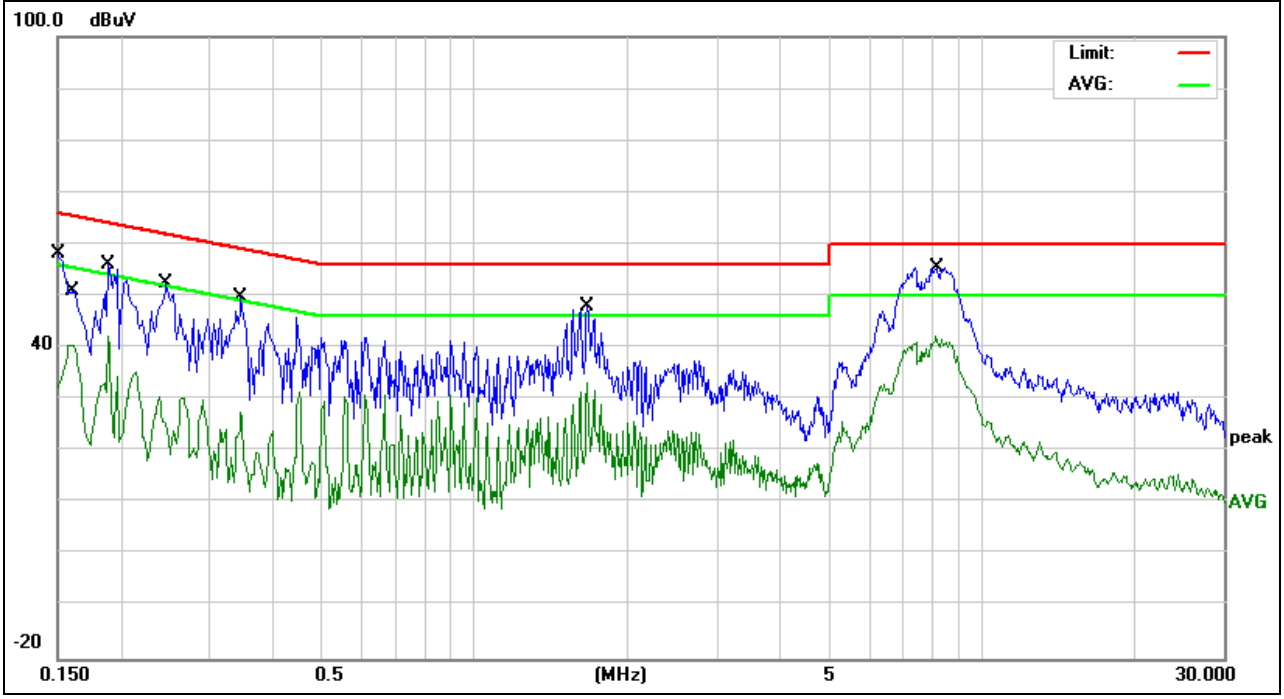

3.2 RADIATED EMISSION MEASUREMENT

3.2.1 LIMITS OF RADIATED EMISSION MEASUREMENT

FREQUENCY (MHz)	Class A (at 10m)	Class B (at 3m)
	dBuV/m	dBuV/m
30 ~ 88	39.0	40.0
88 ~ 216	43.5	43.5
216 ~ 960	46.5	46.0
Above 960	49.5	54.0

Notes:

(1) The limit for radiated test was performed according to as following: FCC PART 15B /ICES-003.

(2) The tighter limit applies at the band edges.

(3) Emission level (dBuV/m)=20log Emission level (uV/m).

3.2.2 TEST PROCEDURE

Test Arrangement for Radiated Emissions up to 1 GHz

a. The EUT was placed on the top of a rotating table 0.8 meters above the ground at an accredited test facility. The table was rotated 360 degrees to determine the position of the highest radiation.

b. The EUT was set 3 meters away from the interference-receiving antenna, which was mounted on the top of a variable-height antenna tower.

c. The antenna is a broadband antenna, and its height is varied from one meter to four meters above the ground to determine the maximum value of the field strength. Both horizontal and vertical polarizations of the antenna are set to make the measurement.

d. For each suspected emission, the EUT was arranged to its worst case and then the antenna was tuned to heights from 1 meter to 4 meters and the rotatable table was turned from 0 degrees to 360 degrees to find the maximum reading.

Note: The resolution bandwidth and video bandwidth of test receiver/spectrum analyzer is 120kHz for quasi-peak detection (QP) at frequency below 1GHz.

Test Arrangement for Radiated Emissions above 1 GHz.

a. The EUT was placed on the top of a rotating table 0.8 meters above the ground at an accredited chamber room. The table was rotated 360 degrees to determine the position of the highest radiation.

b. The EUT was set 3 meters away from the interference-receiving antenna, which was mounted on the top of a variable-height antenna tower.

c. The height of antenna can be varied from one meter to four meters, the height of adjustment depends on the EUT height and the antenna 3dB beamwidth both, to detect the maximum value of the field strength.Both horizontal and vertical polarizations of the antenna are set to make the measurement.

d. For each suspected emission, the EUT was arranged to its worst case and then the antenna was tuned to heights and the rotatable table was turned from 0 degrees to 360 degrees to find the maximum reading.

Note：For the hand-held device, the EUT should be measured for all 3 axes and only the worst case is recorded in the report

During the radiated emission test, the Spectrum Analyzer was set with the following configurations:

Frequency Band (MHz)	Function	Resolution bandwidth	Video Bandwidth
30 to 1000	QP	120 kHz	300 kHz
Above 1000	Peak	1 MHz	1 MHz
	Avg	1 MHz	10 Hz

3.2.3 TEST SETUP

For Radiated Emission 30~1000MHz

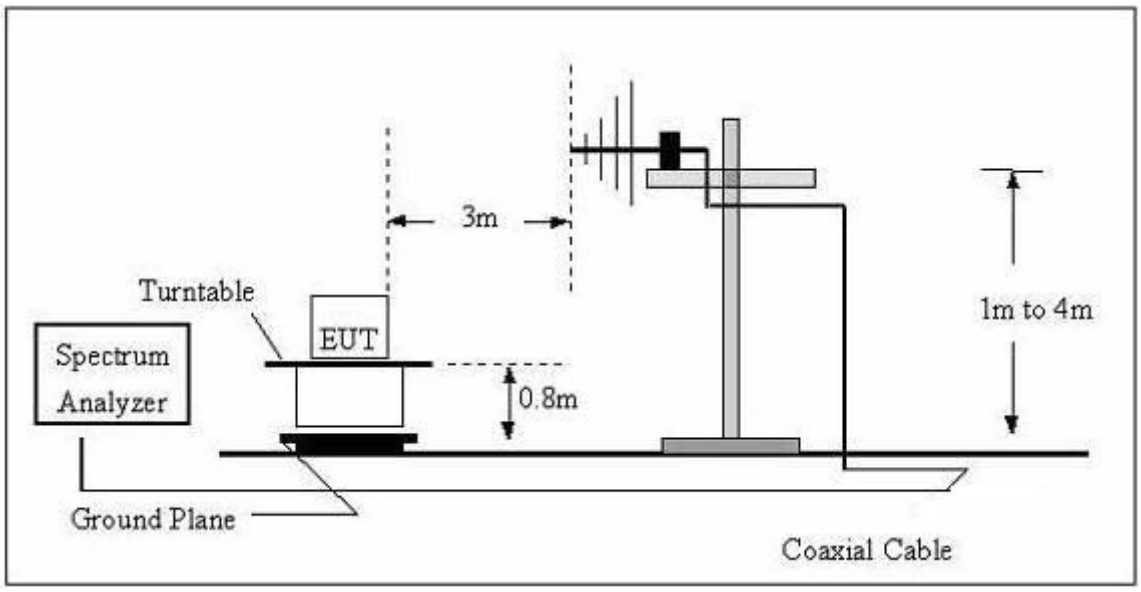

(B) Radiated Emission Test Set-Up Frequency Above 1GHz

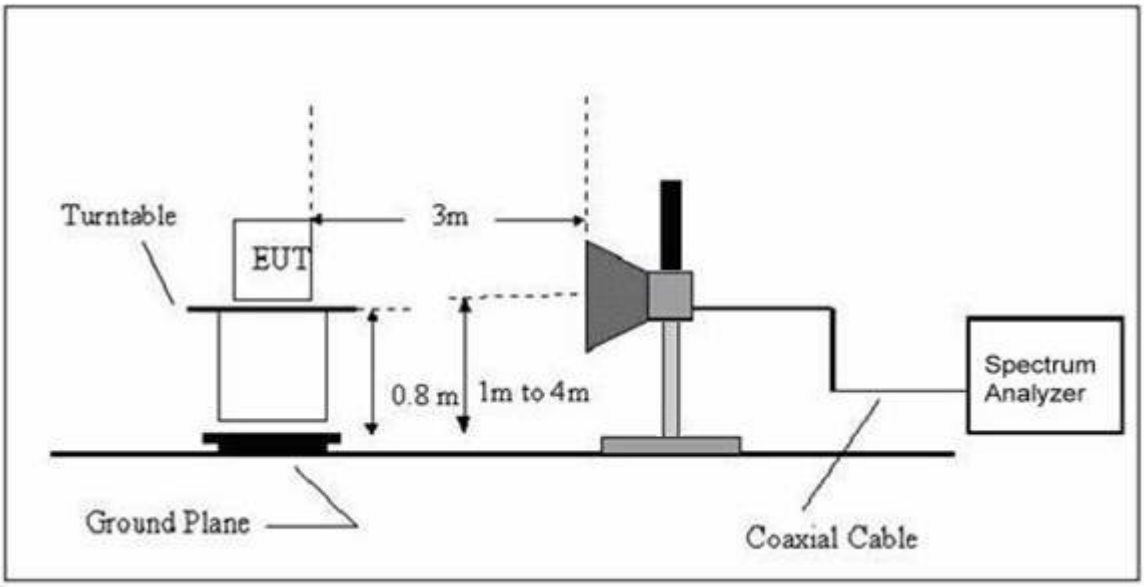

3.2.4 TEST RESULTS

TEST RESULTS (30~1000 MHz)

EUT:	Detachable Laptop	Model Name. :	i896QW
Temperature:	24 ℃	Relative Humidity:	54%
Pressure:	1010 hPa	Test Date :	2016-8-24
Test Mode :	Mode 1	Polarization :	Horizontal
Test Power :	DC 5V From Adapter AC 120V/60Hz		

Polar (H/V)	Frequency (MHz)	Meter Reading (dBuV)	Factor (dB)	Emission Level (dBuV/m)	Limits (dBuV/m)	Margin (dB)	Remark
H	34.7601	8.33	18.00	26.33	40.00	-13.67	QP
H	78.9652	25.93	10.16	36.09	40.00	-3.91	QP
H	94.7601	26.91	11.08	37.99	43.50	-5.51	QP
H	106.7587	26.19	11.32	37.51	43.50	-5.99	QP
H	148.441	23.58	12.69	36.27	43.50	-7.23	QP
H	234.9909	21.84	12.01	33.85	46.00	-12.15	QP

Remark:
Factor = Antenna Factor + Cable Loss - Amplifier.

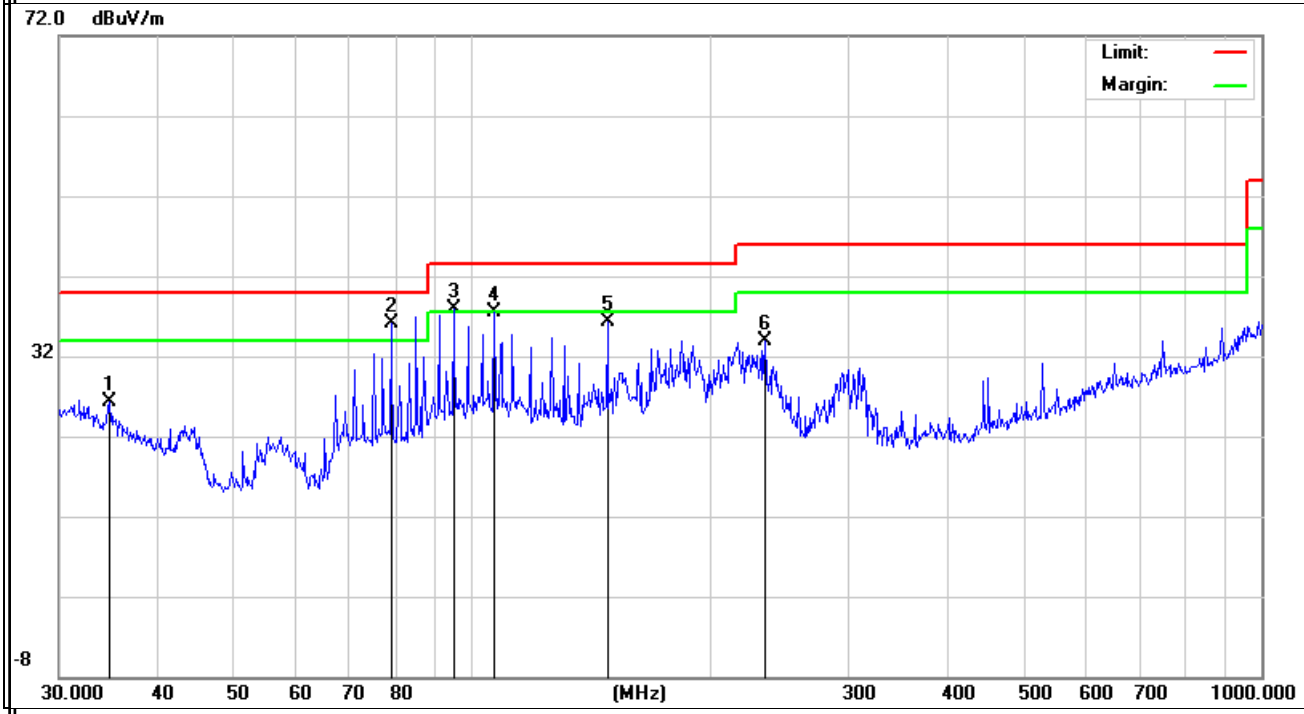

EUT:	Detachable Laptop	Model Name. :	i896QW
Temperature:	24 ℃	Relative Humidity:	54%
Pressure:	1010 hPa	Test Date :	2016-8-24
Test Mode :	Mode 1	Polarization :	Vertical
Test Power :	DC 5V From Adapter AC 120V/60Hz		

Polar (H/V)	Frequency (MHz)	Meter Reading (dBuV)	Factor (dB)	Emission Level (dBuV/m)	Limits (dBuV/m)	Margin (dB)	Remark
V	35.8746	12.89	17.68	30.57	40.00	-9.43	QP
V	43.5056	17.33	13.56	30.89	40.00	-9.11	QP
V	96.7749	25.44	11.27	36.71	43.50	-6.79	QP
V	130.3788	23.33	11.99	35.32	43.50	-8.18	QP
V	219.0753	20.47	12.14	32.61	46.00	-13.39	QP
V	625.078	14.59	21.13	35.72	46.00	-10.28	QP

Remark:

Factor = Antenna Factor + Cable Loss - Amplifier.

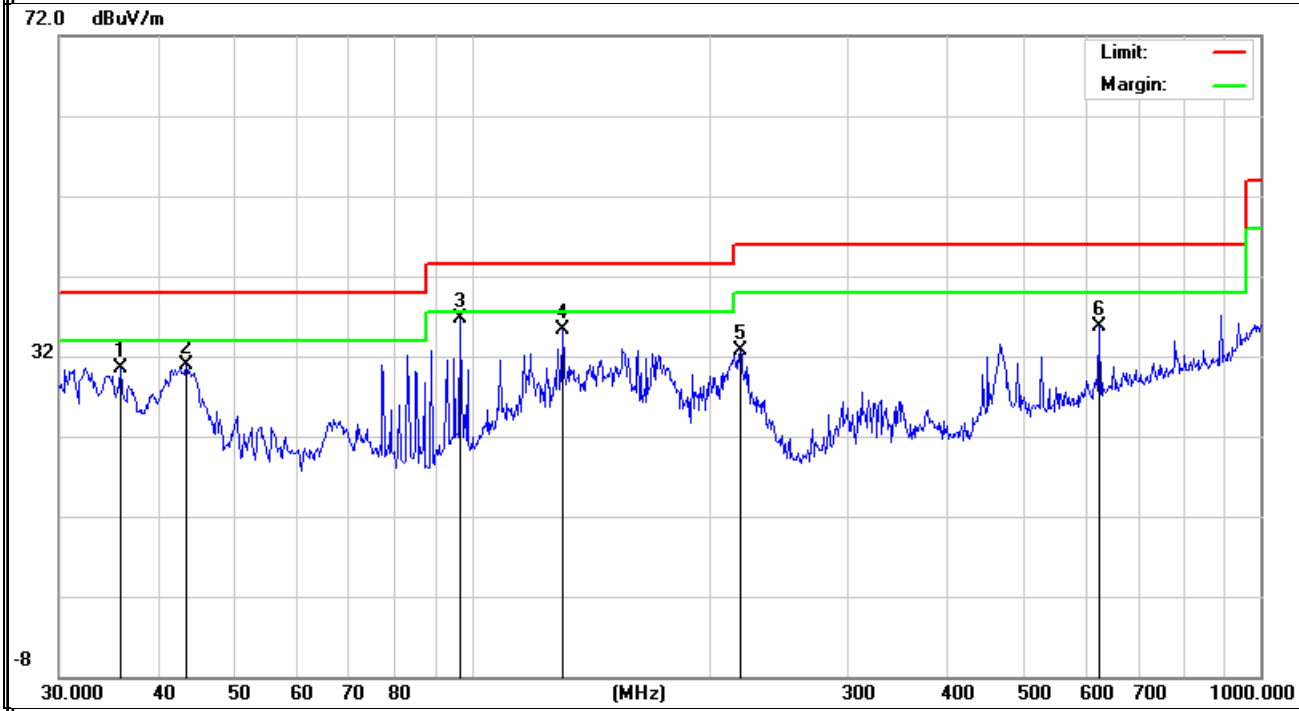

3.2.5 TEST RESULTS(1000~12400MHz)

The Testing have been conformed to 5*2480MHz=12400MHz, and the worst result was report as below:

Polar (H/V)	Frequency (MHz)	Meter Reading (dBuV)	Factor (dB)	Emission Level (dBuV/m)	Limits (dBuV/m)	Margin (dB)	Remark
V	1454.232	55.19	-13.38	41.81	74.00	-32.19	peak
V	1454.232	36.82	-13.38	23.44	54.00	-30.56	AVG
V	2397.385	53.70	-10.10	43.60	74.00	-30.40	peak
V	2397.385	37.69	-10.10	27.59	54.00	-26.41	AVG
H	1438.682	55.10	-13.40	41.70	74.00	-32.30	peak
H	1438.681	36.89	-13.40	23.49	54.00	-30.51	AVG
H	2401.684	52.76	-10.12	42.64	74.00	-31.36	peak
H	2401.684	36.27	-10.12	26.15	54.00	-27.85	AVG

Remark:

Note: (1) All other emissions more than 20dB below the limit.

(2)Absolute Level= ReadingLevel+ Factor, Margin= Absolute Level – Limit

4. EUT TEST PHOTO

Radiated Measurement Photos

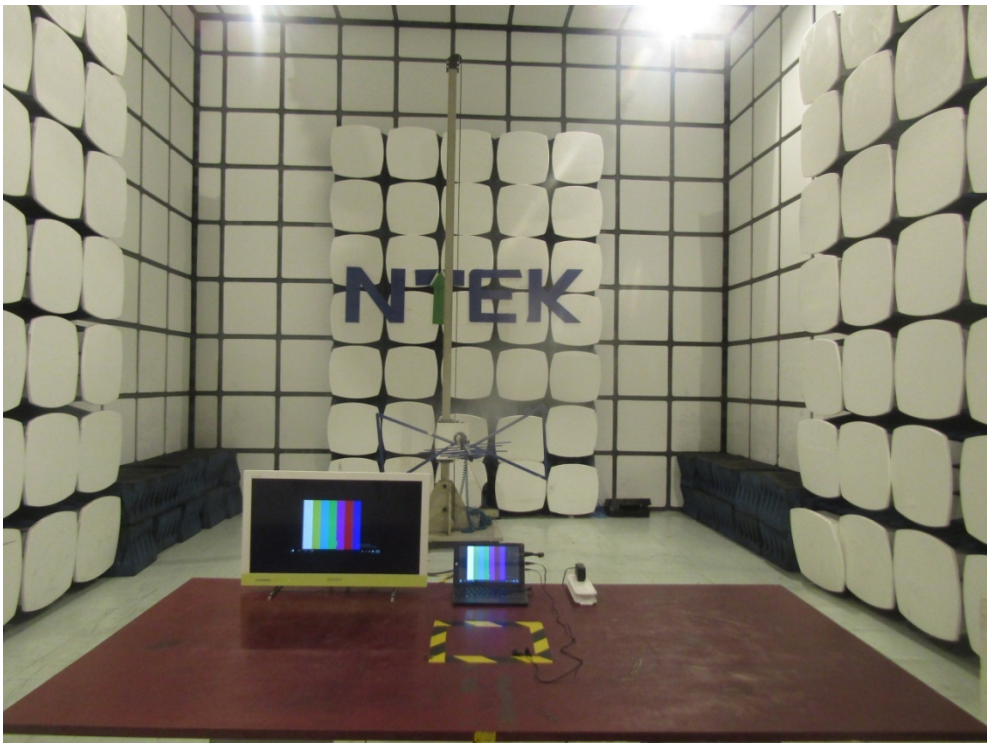

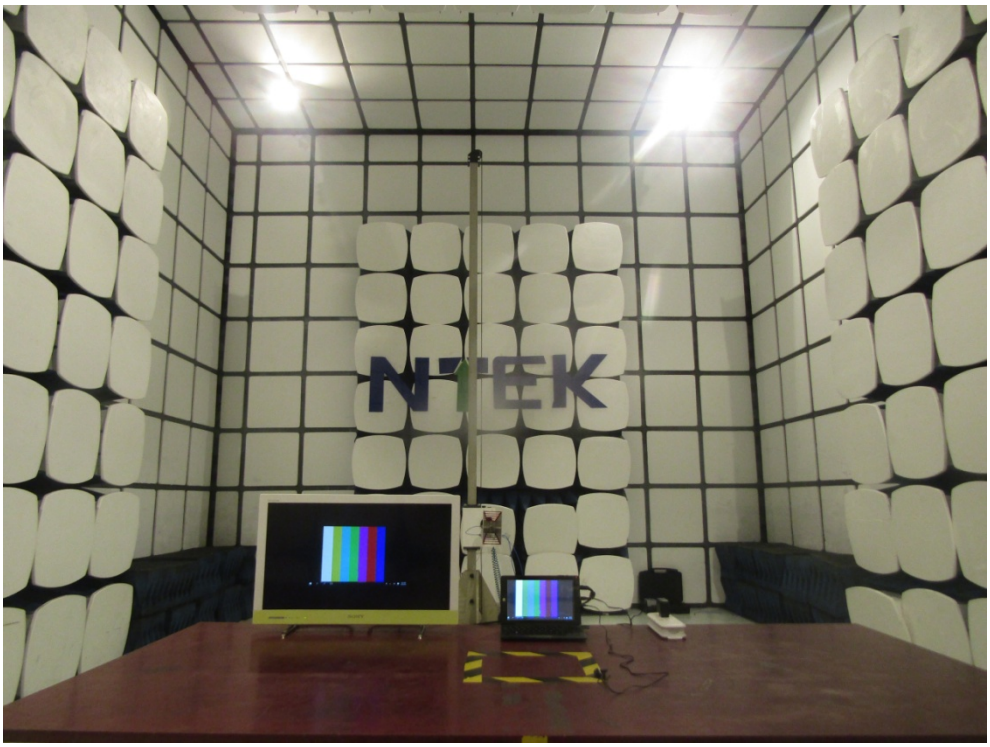
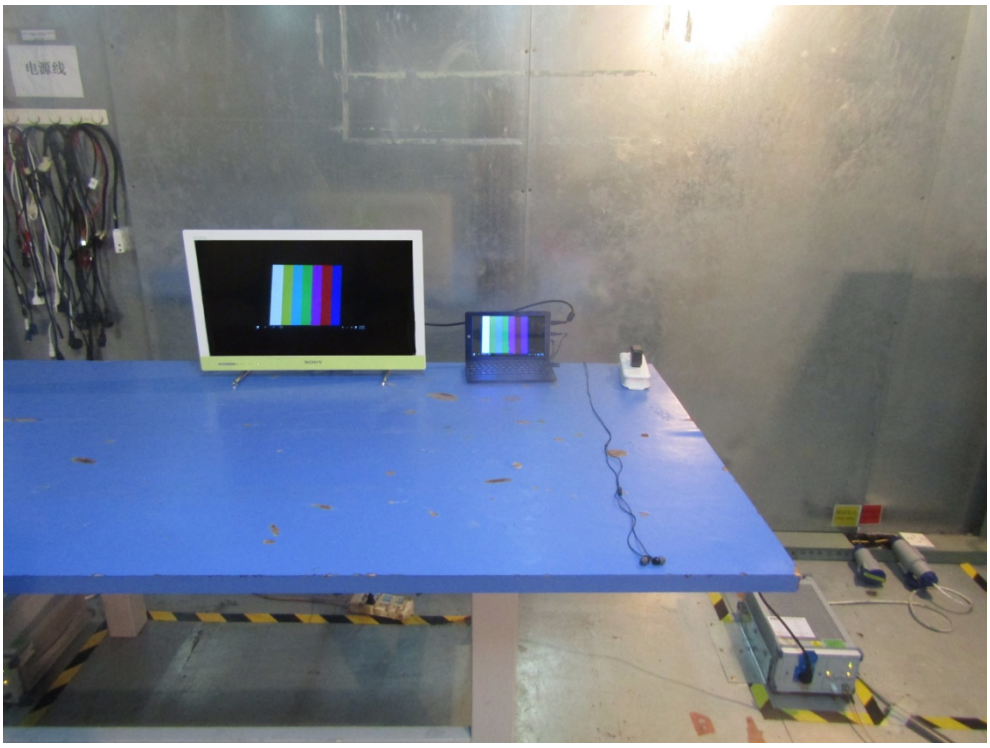
Conducted Measurement Photos