FCC Test Report

Report No.: AGC04138210303FE04

FCC ID	:	2AAXO-CPK565
APPLICATION PURPOSE	:	Original Equipment
PRODUCT DESIGNATION	:	CARPOOL KARAOKE MICROPHONE
BRAND NAME	:	Singing Machine
MODEL NAME	:	CPK565, CPK565G, CPK565R, CPK565GD, CPK565RD, CPK565XX (XX means unit color, it can be A to Z or N/A)
APPLICANT	:	THE SINGING MACHINE COMPANY, INC.
DATE OF ISSUE	:	May 18, 2021
STANDARD(S)	:	FCC Part 15.236
REPORT VERSION	:	V1.0

Attestation of Global Compliance (Shenzhen) Co., Ltd

Any report having not been signed by authorized approver, or having been altered without authorization, or having not been stamped by the "Dedicated Testing/Inspection Stamp" is deemed to be invalid. Copying or excerpting portion of, or altering the content of the report is not permitted without the written authorization of AGC. The test results presented in the report apply only to the tested sample. Any objections to report issued by AGC should be submitted to AGC within 15days after the issuance of the test report. Further enquiry of validity or verification of the test report should be addressed to AGC by agc@agc-cert.com.

Attestation of Global Compliance(Shenzhen)Co., Ltd
Attestation of Global Compliance(Shenzhen)Std & Tech Co., Ltd
Tel: +86-755 2523 4088 E-mail: agc@agc-cert.com Web: http://cn.agc-cert.com/

Report Revise Record

Report Version	Revise Time	Issued Date	Valid Version	Notes
V1.0	/	May 18, 2021	Valid	Initial Release

Any report having not been signed by authorized approver, or having been altered without authorization, or having not been stamped by the "Dedicated Testing/Inspection Stamp" is deemed to be invalid. Copying or excerpting portion of, or altering the content of the report is not permitted without the written authorization of AGC. The test results presented in the report apply only to the tested sample. Any objections to report issued by AGC should be submitted to AGC within 15days after the issuance of the test report. Further enquiry of validity or verification of the test report should be addressed to AGC by agc@agc-cert.com.

Attestation of Global Compliance(Shenzhen)Co., Ltd
Attestation of Global Compliance(Shenzhen)Std & Tech Co., Ltd
Tel: +86-755 2523 4088 E-mail: agc@agc-cert.com Web: http://cn.agc-cert.com/

TABLE OF CONTENTS

1. VERIFICATION OF CONFORMITY 5

2. GENERAL INFORMATION 6

2.1. PRODUCT DESCRIPTION 6
2.2. TEST METHODOLOGY 7
2.3. SPECIAL ACCESSORIES 7
2.4. EQUIPMENT MODIFICATIONS 7
2.5. ANTENNA REQUIREMENT 7

3. MEASUREMENT UNCERTAINTY 8

4. DESCRIPTION OF TEST MODES 9

5. SYSTEM TEST CONFIGURATION 10

5.1. CONFIGURATION OF EUT SYSTEM 10
5.2 EQUIPMENT USED IN TESTED SYSTEM 10
5.3. SUMMARY OF TEST RESULTS 10

6. TEST FACILITY 11

7. OUPUT POWER 12

7.1. TEST LIMIT 12
7.2. MEASUREMENT PROCEDURE 12
7.3. TEST SETUP 13
7.4. TEST RESULT 14

8. OCCUPIED BANDWIDTH 15

8.1. TEST LIMIT 15
8.2. MEASUREMENT PROCEDURE 15
8.3. TEST SET-UP 15
8.4. MEASUREMENT RESULTS 16

9. FREQUENCY STABILITY 17

Any report having not been signed by authorized approver, or having been altered without authorization, or having not been stamped by the "Dedicated Testing/Inspection Stamp" is deemed to be invalid. Copying or excerpting portion of, or altering the content of the report is not permitted without the written authorization of AGC. The test results presented in the report apply only to the tested sample. Any objections to report issued by AGC should be submitted to AGC within 15days after the issuance of the test report. Further enquiry of validity or verification of the test report should be addressed to AGC by agc@agc-cert.com.

9.1. TEST LIMIT 17
9.2. MEASUREMENT PROCEDURE 17
9.3. TEST SET-UP 18
9.4. TEST RESULT 18

10. EMISSIONS WITHIN THE BAND AND OUTSIDE THE BAND 19

10.1. TEST LIMIT 19
10.2. MEASUREMENT PROCEDURE 19
10.3. TEST SETUP 20
10.4. TEST RESULT 22

11. LINE CONDUCTED EMISSION TEST 26

11.1. LIMITS OF LINE CONDUCTED EMISSION TEST 26
11.2. BLOCK DIAGRAM OF LINE CONDUCTED EMISSION TEST 26
11.3. PRELIMINARY PROCEDURE OF LINE CONDUCTED EMISSION TEST 27
11.4. FINAL PROCEDURE OF LINE CONDUCTED EMISSION TEST 27
11.5. TEST RESULT OF LINE CONDUCTED EMISSION TEST 28

APPENDIX A: PHOTOGRAPHS OF TEST SETUP 30

APPENDIX B: PHOTOGRAPHS OF EUT 32

Any report having not been signed by authorized approver, or having been altered without authorization, or having not been stamped by the "Dedicated Testing/Inspection Stamp" is deemed to be invalid. Copying or excerpting portion of, or altering the content of the report is not permitted without the written authorization of AGC. The test results presented in the report apply only to the tested sample. Any objections to report issued by AGC should be submitted to AGC within 15days after the issuance of the test report. Further enquiry of validity or verification of the test report should be addressed to AGC by agc@agc-cert.com.

1. VERIFICATION OF CONFORMITY

Applicant	The Singing Machine Company, Inc.
Address	6301 NW 5th Way, Suite 2900 Fort Lauderdale, FL, 33309, U.S.A.
Manufacturer	The Singing Machine Company, Inc.
Address	6301 NW 5th Way, Suite 2900 Fort Lauderdale, FL, 33309, U.S.A.
Factory	ZHUHAI FULLWING ELECTRONIC CO., LTD ZHONGSHAN BRANCH
Address	4/F & 5/F, No 10, Xingye Road, Xinxu, San Xiang, Zhongshan, Guangdong, China
Product Designation	CARPOOL KARAOKE MICROPHONE
Brand Name	Singing Machine
Test Model	CPK565
Series Model	CPK565, CPK565G, CPK565R, CPK565GD, CPK565RD, CPK565XX (XX means unit color, it can be A to Z or N/A)
Difference description	All the series models are the same as the test model except for the model names and the color of appearance.
Date of test	Mar. 22, 2021 to May 14, 2021
Deviation	No any deviation from the test method
Condition of Test Sample	Normal
Test Result	Pass
Report Template	AGCRT-US-LPAS/RF

We hereby certify that:

The above equipment was tested by Attestation of Global Compliance (Shenzhen) Co., Ltd. The test data, data evaluation, test procedures, and equipment configurations shown in this report were made in accordance with the procedures given in ANSI C63.10:2013 and the energy emitted by the sample EUT tested as described in this report is in compliance with radiated emission limits of FCC Part 15.236.

Prepared By	Thea Huang Project Engineer	May 14, 2021
Reviewed By	Max Zhang Reviewer	May 17, 2021
Approved By	Forrest Lei Authorized Officer	May 17, 2021

Any report having not been signed by authorized approver, or having been altered without authorization, or having not been stamped by the "Dedicated Testing/Inspection Stamp" is deemed to be invalid. Copying or excerpting portion of, or altering the content of the report is not permitted without the written authorization of AGC. The test results presented in the report apply only to the tested sample. Any objections to report issued by AGC should be submitted to AGC within 15days after the issuance of the test report. Further enquiry of validity or verification of the test report should be addressed to AGC by agc@agc-cert.com.

Attestation of Global Compliance(Shenzhen)Co., Ltd
Attestation of Global Compliance(Shenzhen)Std & Tech Co., Ltd
Tel: +86-755 2523 4088 E-mail: agc@agc-cert.com Web: http://cn.agc-cert.com/

2. GENERAL INFORMATION

2.1. PRODUCT DESCRIPTION

Operation Frequency	600MHz
Maximum Radiated Power	-11.52dBm
Modulation	FM
Number of channels	1
Antenna Gain	0dBi
Antenna Designation	Integral Antenna (Met 15.203 Antenna requirement)
Hardware Version	1.0
Software Version	1.0
Power Supply	DC3.7V by battery or DC 5Vby adapter

Any report having not been signed by authorized approver, or having been altered without authorization, or having not been stamped by the "Dedicated Testing/Inspection Stamp" is deemed to be invalid. Copying or excerpting portion of, or altering the content of the report is not permitted without the written authorization of AGC. The test results presented in the report apply only to the tested sample. Any objections to report issued by AGC should be submitted to AGC within 15days after the issuance of the test report. Further enquiry of validity or verification of the test report should be addressed to AGC by agc@agc-cert.com.

2.2. TEST METHODOLOGY

Both conducted and radiated testing was performed according to the procedures in ANSI C63.10 (2013). Radiated testing was performed at an antenna to EUT distance 3 meters.

2.3. SPECIAL ACCESSORIES

Refer to section 5.2.

2.4. EQUIPMENT MODIFICATIONS

Not available for this EUT intended for grant.

2.5. ANTENNA REQUIREMENT

This intentional radiator is designed with a permanently attached antenna of an antenna to ensure that no antenna other than that furnished by the responsible party shall be used with the device.

For more information of the antenna, please refer to the APPENDIX B: PHOTOGRAPHS OF EUT.

Any report having not been signed by authorized approver, or having been altered without authorization, or having not been stamped by the "Dedicated Testing/Inspection Stamp" is deemed to be invalid. Copying or excerpting portion of, or altering the content of the report is not permitted without the written authorization of AGC. The test results presented in the report apply only to the tested sample. Any objections to report issued by AGC should be submitted to AGC within 15days after the issuance of the test report. Further enquiry of validity or verification of the test report should be addressed to AGC by agc@agc-cert.com.

3. MEASUREMENT UNCERTAINTY

The reported uncertainty of measurement y ±U, where expended uncertainty U is based on a standard uncertainty multiplied by a coverage factor of k=2, providing a level of confidence of approximately 95%.

Item	Measurement Uncertainty
Uncertainty of Conducted Emission for AC Port	U_c = ±3.1 dB
Uncertainty of Radiated Emission below 1GHz	U_c = ±4.0 dB
Uncertainty of Radiated Emission above 1GHz	U_c = ±4.8 dB
Uncertainty of total RF power, conducted	U_c = ±0.8 dB
Uncertainty of spurious emissions, conducted	U_c = ±2 %
Uncertainty of Occupied Channel Bandwidth	U_c = ±2 %

Any report having not been signed by authorized approver, or having been altered without authorization, or having not been stamped by the "Dedicated Testing/Inspection Stamp" is deemed to be invalid. Copying or excerpting portion of, or altering the content of the report is not permitted without the written authorization of AGC. The test results presented in the report apply only to the tested sample. Any objections to report issued by AGC should be submitted to AGC within 15days after the issuance of the test report. Further enquiry of validity or verification of the test report should be addressed to AGC by agc@agc-cert.com.

4. DESCRIPTION OF TEST MODES

NO.	TEST MODE DESCRIPTION
1	TX mode (Channel 600MHz)

Note:

1. For Radiated Emission, 3axis were chosen for testing for each applicable mode.
2. For Conducted Test method, a temporary antenna connector is provided by the manufacture.

Any report having not been signed by authorized approver, or having been altered without authorization, or having not been stamped by the "Dedicated Testing/Inspection Stamp" is deemed to be invalid. Copying or excerpting portion of, or altering the content of the report is not permitted without the written authorization of AGC. The test results presented in the report apply only to the tested sample. Any objections to report issued by AGC should be submitted to AGC within 15days after the issuance of the test report. Further enquiry of validity or verification of the test report should be addressed to AGC by agc@agc-cert.com.

Attestation of Global Compliance(Shenzhen)Co., Ltd
Attestation of Global Compliance(Shenzhen)Std & Tech Co., Ltd
Tel: +86-755 2523 4088 E-mail: agc@agc-cert.com Web: http://cn.agc-cert.com/

5. SYSTEM TEST CONFIGURATION

5.1. CONFIGURATION OF EUT SYSTEM

Radiated Emission Configure:

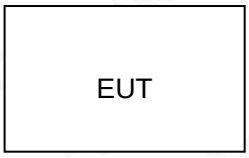

Conducted Emission Configure:

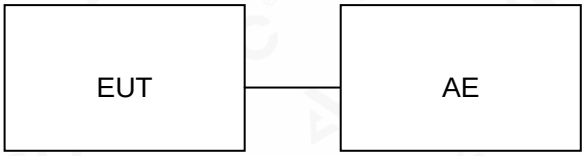

5.2 EQUIPMENT USED IN TESTED SYSTEM

Item	Equipment	Model No.	ID or Specification	Remark
1	CARPOOL KARAOKE MICROPHONE	CPK565	2AAXO-CPK565	EUT
2	Speaker	A1	N/A	AE
3	Adapter	ZL-PCB0100020502000	DC 5V/1A	AE

Note: The adapter was provided by AGC Lab.

5.3. SUMMARY OF TEST RESULTS

FCC RULES	DESCRIPTION OF TEST	RESULT
§15.203	Antenna requirement	Compliant
§15.236(d)(3)	Maximum radiated power	Compliant
§15.236(f)(2)	Occupied bandwidth	Compliant
§15.236(f)(3)	Frequency stability	Compliant
§15.236(g)	Emissions within the band	Compliant
§15.236(g)	Emissions outside of this band	Compliant
15.207	Line Conducted Emission	Compliant

Any report having not been signed by authorized approver, or having been altered without authorization, or having not been stamped by the "Dedicated Testing/Inspection Stamp" is deemed to be invalid. Copying or excerpting portion of, or altering the content of the report is not permitted without the written authorization of AGC. The test results presented in the report apply only to the tested sample. Any objections to report issued by AGC should be submitted to AGC within 15days after the issuance of the test report. Further enquiry of validity or verification of the test report should be addressed to AGC by agc@agc-cert.com.

6. TEST FACILITY

Test Site	Attestation of Global Compliance (Shenzhen) Co., Ltd
Location	1-2/F, Building 19, Junfeng Industrial Park, Chongqing Road, Heping Community, Fuhai Street, Bao'an District, Shenzhen, Guangdong, China
Designation Number	CN1259
FCC Test Firm Registration Number	975832
A2LA Cert. No.	5054.02
Description	Attestation of Global Compliance (Shenzhen) Co., Ltd is accredited by A2LA

TEST EQUIPMENT OF CONDUCTED EMISSION TEST

Equipment	Manufacturer	Model	S/N	Cal. Date	Cal. Due
TEST RECEIVER	R&S	ESPI	101206	May 15, 2020	May 14, 2021
LISN	R&S	ESH2-Z5	100086	Jul. 03, 2020	Jul. 02, 2021
Test software	R&S	ES-K1(Ver.V1.71)	N/A	N/A	N/A

TEST EQUIPMENT OF RADIATED EMISSION TEST

Equipment	Manufacturer	Model	S/N	Cal. Date	Cal. Due
TEST RECEIVER	R&S	ESCI	10096	May 15, 2020	May 14, 2021
EXA Signal Analyzer	Aglient	N9020A	MY52090123	Sep. 03, 2020	Sep. 02, 2021
Attenuator	Wariors	W13	11324	Aug. 21, 2020	Aug. 20, 2021
Horn antenna	ETS-LINDGREN	3117	00154520	Sep. 03, 2020	Sep. 02, 2021
Active loop antenna (9K-30MHz)	ZHINAN	ZN30900C	18051	May 22, 2020	May 21, 2022
Double-Ridged Waveguide Horn	ETS-LINDGREN	3117	00034609	May 17, 2019	May 16, 2021
Broadband Preamplifier	ETS-LINDGREN	3117PA	00225134	Sep. 03, 2020	Sep. 02, 2021
ANTENNA	SCHWARZBECK	VULB9168	494	Sep. 20, 2019	Sep. 19, 2021
Wireless communication tester	HP	8920B	US35010161	Sep. 03, 2020	Sep. 02, 2021
Test software	Tonscend	JS32-RE (Ver. 2.5)	N/A	N/A	N/A

Any report having not been signed by authorized approver, or having been altered without authorization, or having not been stamped by the "Dedicated Testing/Inspection Stamp" is deemed to be invalid. Copying or excerpting portion of, or altering the content of the report is not permitted without the written authorization of AGC. The test results presented in the report apply only to the tested sample. Any objections to report issued by AGC should be submitted to AGC within 15days after the issuance of the test report. Further enquiry of validity or verification of the test report should be addressed to AGC by agc@agc-cert.com.

7. OUPUT POWER

7.1. TEST LIMIT

The power may not exceed the following values.

470-608 MHz bands: 50 mW EIRP

7.2. MEASUREMENT PROCEDURE

☒EIRP Test Method

1. The EUT was placed on the top of the turntable 0.8 meter above ground. The phase center of the receiving antenna mounted on the top of a height-variable antenna tower was placed 3 meters far away from the turntable.
2. Power on the EUT and all the supporting units. The turntable was rotated by 360 degrees to determine the position of the highest radiation.
3. The height of the broadband receiving antenna was varied between one meter and four meters above ground to find the maximum emissions field strength of both horizontal and vertical polarization.
4. For each suspected emission, the antenna tower was scan (from 1 M to 4 M) and then the turntable was rotated (from 0 degree to 360 degrees) to find the maximum reading.
5. Set the test-receiver system to Peak or CISPR quasi-peak Detect Function with specified bandwidth under Maximum Hold Mode.
6. EIRP [dBm] = E[dB(μV)/m] − 95.2

☐Conducted Power Test Method

1. Connect EUT RF output port to the Spectrum Analyzer through an RF attenuator
2. RBW ⩾ OBW.
3. VBW ⩾3 x RBW.
4. Span ⩾2 x OBW.
5. Sweep time ⩾ 10 x (number of points in sweep) x (transmission symbol period)
6. Detector function: Peak.
7. Trace: Max hold.
8. Allow trace to stabilize. Use the marker-to-peak function to set the marker to the peak of the emission. The indicated level is the peak output power, after any corrections for external attenuators and cables.

Any report having not been signed by authorized approver, or having been altered without authorization, or having not been stamped by the "Dedicated Testing/Inspection Stamp" is deemed to be invalid. Copying or excerpting portion of, or altering the content of the report is not permitted without the written authorization of AGC. The test results presented in the report apply only to the tested sample. Any objections to report issued by AGC should be submitted to AGC within 15days after the issuance of the test report. Further enquiry of validity or verification of the test report should be addressed to AGC by agc@agc-cert.com.

7.3. TEST SETUP

☒EIRP Test Method

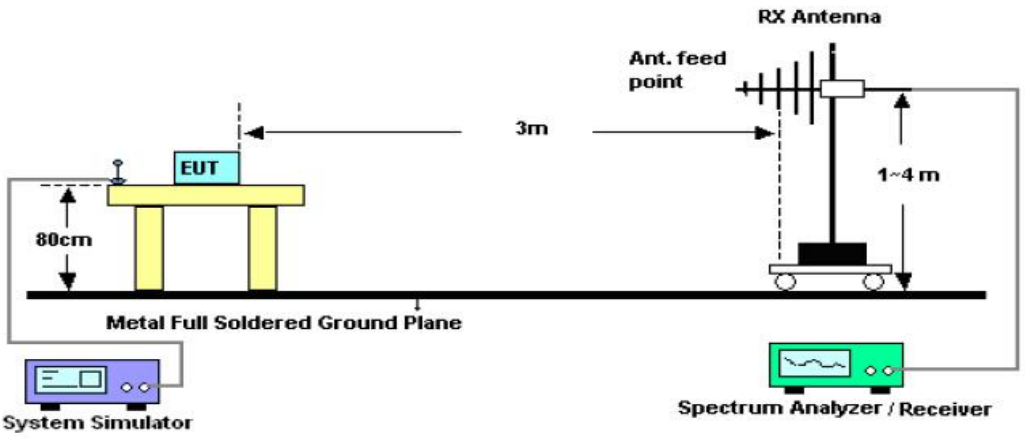

☐Conducted Power Test Method

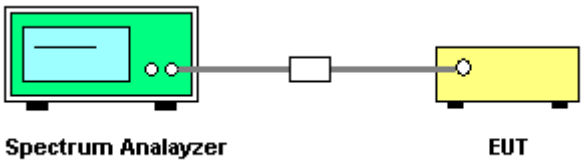

Any report having not been signed by authorized approver, or having been altered without authorization, or having not been stamped by the "Dedicated Testing/Inspection Stamp" is deemed to be invalid. Copying or excerpting portion of, or altering the content of the report is not permitted without the written authorization of AGC. The test results presented in the report apply only to the tested sample. Any objections to report issued by AGC should be submitted to AGC within 15days after the issuance of the test report. Further enquiry of validity or verification of the test report should be addressed to AGC by agc@agc-cert.com.

7.4. TEST RESULT

Test Channel (MHz)	Antenna Polarity	Level (dBm)	Limit (dBm)
600	H	-13.55	17
600	V	-11.52	17

Any report having not been signed by authorized approver, or having been altered without authorization, or having not been stamped by the "Dedicated Testing/Inspection Stamp" is deemed to be invalid. Copying or excerpting portion of, or altering the content of the report is not permitted without the written authorization of AGC. The test results presented in the report apply only to the tested sample. Any objections to report issued by AGC should be submitted to AGC within 15days after the issuance of the test report. Further enquiry of validity or verification of the test report should be addressed to AGC by agc@agc-cert.com.

Attestation of Global Compliance(Shenzhen)Co., Ltd
Attestation of Global Compliance(Shenzhen)Std & Tech Co., Ltd
Tel: +86-755 2523 4088 E-mail: agc@agc-cert.com Web: http://cn.agc-cert.com/

8. OCCUPIED BANDWIDTH

8.1. TEST LIMIT

The operating bandwidth shall not exceed 200 kHz.

8.2. MEASUREMENT PROCEDURE

1. For the occupied bandwidth measurements, the input signal shall be a 1 kHz tone. The level of the tone shall be set to the manufacturer's maximum rated input to the modulator.
2. Set the EUT Work on operation frequency.
3. Set Span = approximately 1.5 times the occupied bandwidth, centered on a channel
   The nominal IF filter bandwidth (3 dB RBW) shall be in the range of 1% to 5% of the OBW and video bandwidth (VBW) shall be approximately three times RBW; Sweep = auto; Detector function = peak
4. Set SPA Trace 1 Max hold, then View.

8.3. TEST SET-UP

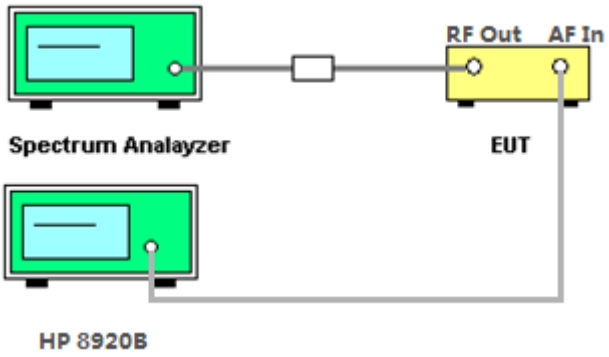

Any report having not been signed by authorized approver, or having been altered without authorization, or having not been stamped by the "Dedicated Testing/Inspection Stamp" is deemed to be invalid. Copying or excerpting portion of, or altering the content of the report is not permitted without the written authorization of AGC. The test results presented in the report apply only to the tested sample. Any objections to report issued by AGC should be submitted to AGC within 15days after the issuance of the test report. Further enquiry of validity or verification of the test report should be addressed to AGC by agc@agc-cert.com.

8.4. MEASUREMENT RESULTS

Test Channel	-26dBc EBW (kHz)	99% OBW (kHz)	Limit (kHz)
600MHz	130.1	87.631	200

TEST PLOT OF BANDWIDTH

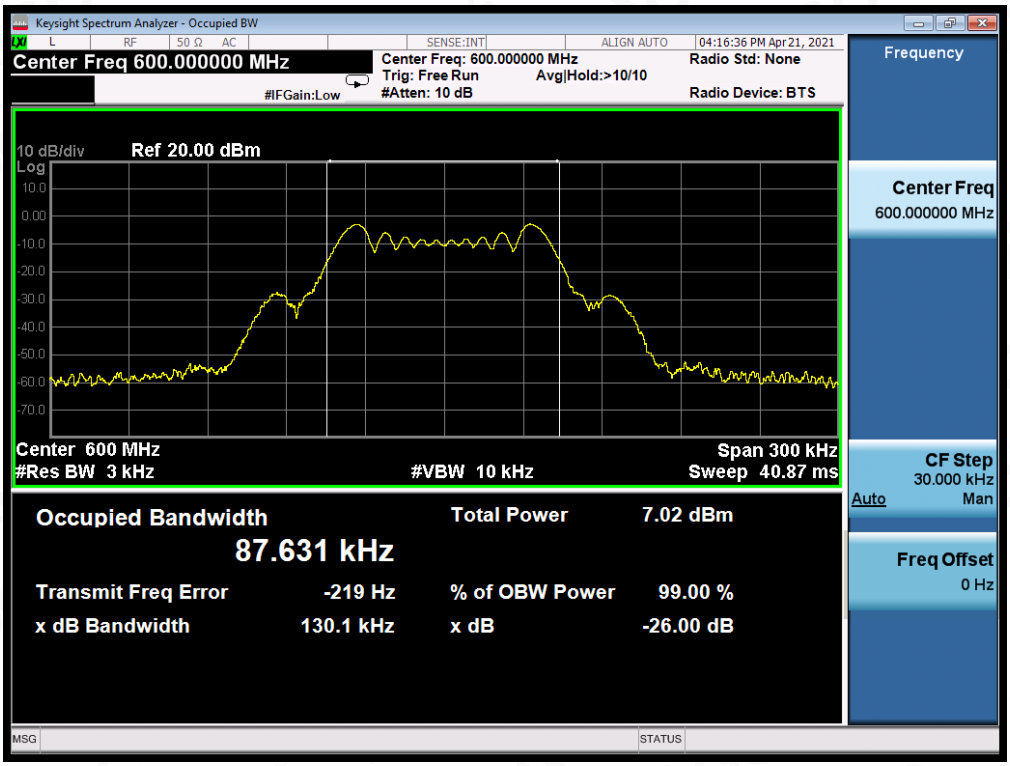

Any report having not been signed by authorized approver, or having been altered without authorization, or having not been stamped by the "Dedicated Testing/Inspection Stamp" is deemed to be invalid. Copying or excerpting portion of, or altering the content of the report is not permitted without the written authorization of AGC. The test results presented in the report apply only to the tested sample. Any objections to report issued by AGC should be submitted to AGC within 15days after the issuance of the test report. Further enquiry of validity or verification of the test report should be addressed to AGC by agc@agc-cert.com.

9. FREQUENCY STABILITY

9.1. TEST LIMIT

The frequency tolerance of the carrier signal shall be maintained within ±0.005% of the operating frequency over a temperature variation of −30 degrees to +50 degrees C at normal supply voltage, and for a variation in the primary supply voltage from 85% to 115% of the rated supply voltage at a temperature of 20 degrees C.

9.2. MEASUREMENT PROCEDURE

1. Connect EUT RF output port to the Spectrum Analyzer through an RF attenuator
2. Set the EUT Work on the operation frequency.
3. Set SPA Centre Frequency = Operation Frequency, RBW= 1 KHz, VBW≥3×RBW.
4. Set SPA Trace 1 Max hold, then View.
5. The test extreme voltage is to change the primary supply voltage from 85 to 115 percent of the nominal value
6. Extreme temperature rule is -30°C~50°C.

Any report having not been signed by authorized approver, or having been altered without authorization, or having not been stamped by the "Dedicated Testing/Inspection Stamp" is deemed to be invalid. Copying or excerpting portion of, or altering the content of the report is not permitted without the written authorization of AGC. The test results presented in the report apply only to the tested sample. Any objections to report issued by AGC should be submitted to AGC within 15days after the issuance of the test report. Further enquiry of validity or verification of the test report should be addressed to AGC by agc@agc-cert.com.

9.3. TEST SET-UP

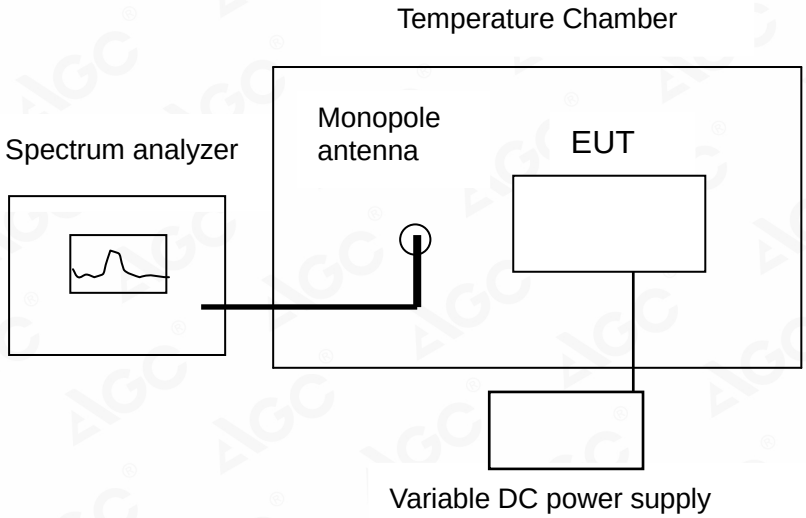

9.4. TEST RESULT

Test frequency: 600MHz

Voltage vs. Frequency Stability (Test Temperature: 20℃)

Voltage(V)	Measurement Frequency (MHz)	Max. Deviation (MHz)	Limit (MHz)	Conclusion
3.145	599.9945	0.0058	0.03	PASS
3.700	599.9943			
4.255	599.9942			

Temperature vs. Frequency Stability (Test Voltage: 3.70V)

Temperature	Measurement Frequency (MHz)	Max. Deviation (MHz)	Limit (MHz)	Conclusion
-30℃	599.9949	0.0056	0.03	PASS
-20℃	599.9949			
-10℃	599.9945			
0℃	599.9946			
10℃	599.9944			
20℃	599.9946			
30℃	599.9947			
40℃	599.9945			
50℃	599.9947			

Any report having not been signed by authorized approver, or having been altered without authorization, or having not been stamped by the "Dedicated Testing/Inspection Stamp" is deemed to be invalid. Copying or excerpting portion of, or altering the content of the report is not permitted without the written authorization of AGC. The test results presented in the report apply only to the tested sample. Any objections to report issued by AGC should be submitted to AGC within 15days after the issuance of the test report. Further enquiry of validity or verification of the test report should be addressed to AGC by agc@agc-cert.com.

10. EMISSIONS WITHIN THE BAND AND OUTSIDE THE BAND

10.1. TEST LIMIT

Emissions within the band from one megahertz below to one megahertz above the carrier frequency shall comply with the emission mask in §8.3 of ETSI EN 300 422-1 V1.4.2 (2011-08).

Emissions outside of this band shall comply with the limits specified in section 8.4 of ETSI EN 300 422-1 V1.4.2 (2011-08).

10.2. MEASUREMENT PROCEDURE

Emission outside the band:

1. The EUT was placed on the top of the turntable 0.8 or 1.5 meter above ground. The phase center of the receiving antenna mounted on the top of a height-variable antenna tower was placed 3 meters far away from the turntable.
2. Power on the EUT and all the supporting units. The turntable was rotated by 360 degrees to determine the position of the highest radiation.
3. The height of the broadband receiving antenna was varied between one meter and four meters above ground to find the maximum emissions field strength of both horizontal and vertical polarization.
4. For each suspected emission, the antenna tower was scan (from 1 M to 4 M) and then the turntable was rotated (from 0 degree to 360 degrees) to find the maximum reading.
5. Set the test-receiver system to Peak or CISPR quasi-peak Detect Function with specified bandwidth under Maximum Hold Mode.
6. EIRP [dBm] = E[dB(μV)/m] − 95.2

The following table is the setting of spectrum analyzer and receiver.

Spectrum Parameter	Setting
Start ~Stop Frequency	9KHz~150KHz/RB 200Hz for QP
Start ~Stop Frequency	150KHz~30MHz/RB 9KHz for QP
Start ~Stop Frequency	30MHz~1000MHz/RB 120KHz for QP
Start ~Stop Frequency	1000MHz~6000MHz/RB 1MHz for QP

Emission within the band:

☒Method of Measurement for Analogue Systems in ETSI EN 300 422-1 Subclass 8.3.1
☐Method of Measurement for Digital Systems in ETSI EN 300 422-1 Subclass 8.3.2

Any report having not been signed by authorized approver, or having been altered without authorization, or having not been stamped by the "Dedicated Testing/Inspection Stamp" is deemed to be invalid. Copying or excerpting portion of, or altering the content of the report is not permitted without the written authorization of AGC. The test results presented in the report apply only to the tested sample. Any objections to report issued by AGC should be submitted to AGC within 15days after the issuance of the test report. Further enquiry of validity or verification of the test report should be addressed to AGC by agc@agc-cert.com.

10.3. TEST SETUP

Emission outside the band

Radiated Emission Test-Setup Frequency Below 30MHz

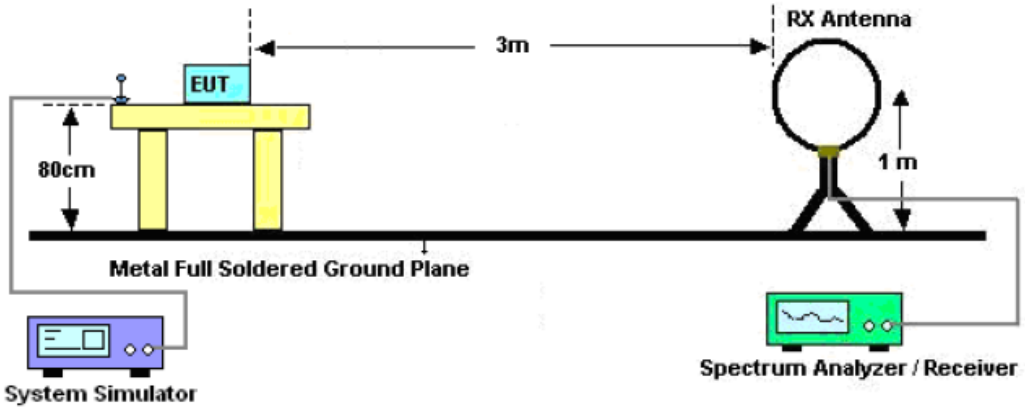

RADIATED EMISSION TEST SETUP 30MHz-1000MHz

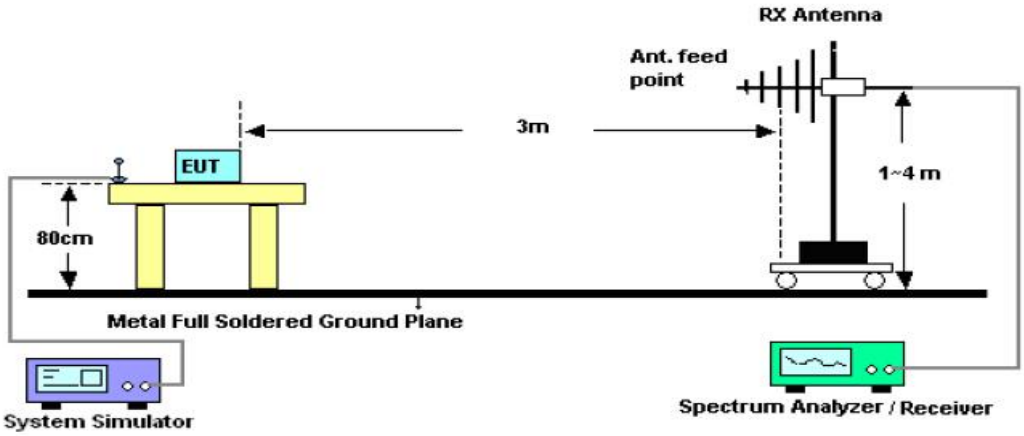

RADIATED EMISSION TEST SETUP ABOVE 1000MHz

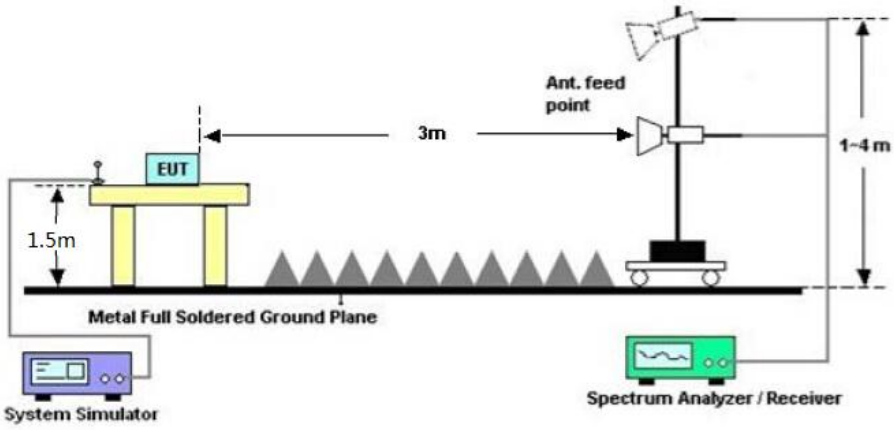

Any report having not been signed by authorized approver, or having been altered without authorization, or having not been stamped by the "Dedicated Testing/Inspection Stamp" is deemed to be invalid. Copying or excerpting portion of, or altering the content of the report is not permitted without the written authorization of AGC. The test results presented in the report apply only to the tested sample. Any objections to report issued by AGC should be submitted to AGC within 15days after the issuance of the test report. Further enquiry of validity or verification of the test report should be addressed to AGC by agc@agc-cert.com.

Emission within the band

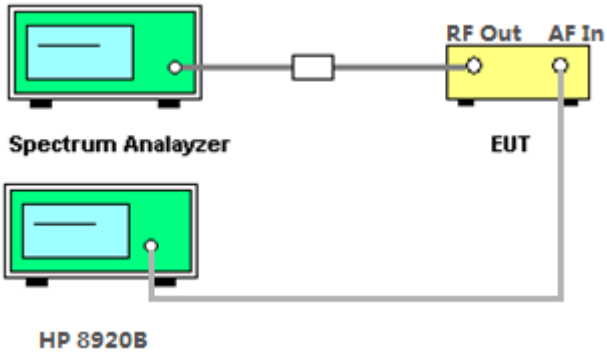

Any report having not been signed by authorized approver, or having been altered without authorization, or having not been stamped by the "Dedicated Testing/Inspection Stamp" is deemed to be invalid. Copying or excerpting portion of, or altering the content of the report is not permitted without the written authorization of AGC. The test results presented in the report apply only to the tested sample. Any objections to report issued by AGC should be submitted to AGC within 15days after the issuance of the test report. Further enquiry of validity or verification of the test report should be addressed to AGC by agc@agc-cert.com.

10.4. TEST RESULT

Emission within the band

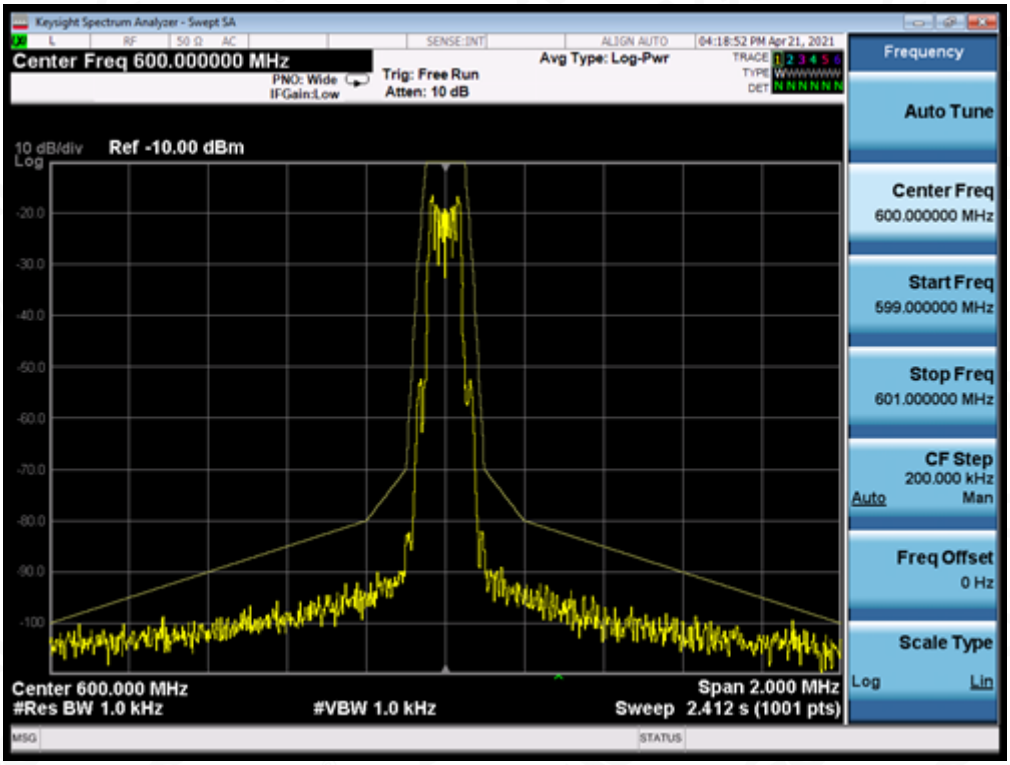

Note:

1.The manufacturer declared that the channel bandwidth is 200KHz.

2.The carrier power is the ref level, and the factor had been edited in the “Input Correction” of the Spectrum Analyzer.

Any report having not been signed by authorized approver, or having been altered without authorization, or having not been stamped by the “Dedicated Testing/Inspection Stamp” is deemed to be invalid. Copying or excerpting portion of, or altering the content of the report is not permitted without the written authorization of AGC. The test results presented in the report apply only to the tested sample. Any objections to report issued by AGC should be submitted to AGC within 15days after the issuance of the test report. Further enquiry of validity or verification of the test report should be addressed to AGC by agc@agc-cert.com.

RADIATED EMISSION BELOW 30MHz

The amplitude of spurious emissions from 9kHz to 30MHz which are attenuated more than 20 dB below the permissible value need not be reported.

Emission outside the band 30-1000MHz

EUT:	CARPOOL KARAOKE MICROPHONE	Model Name:	CPK565
Temperature:	25℃	Relative Humidity:	60%
Pressure:	986 Pa	Test Voltage:	Normal
Test Mode:	Transmitting at 600MHz	Polarization:	Horizontal

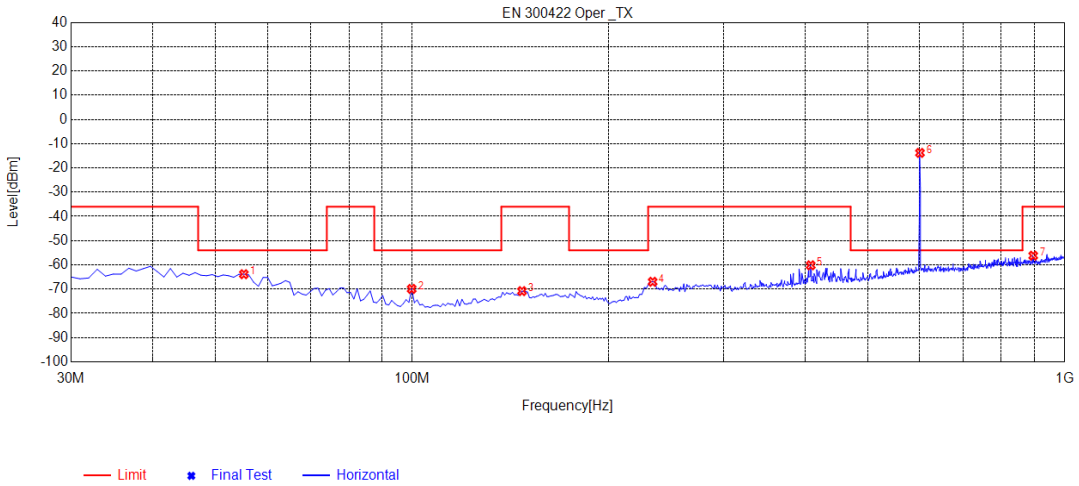

NO.	Freq. [MHz]	Reading [dBm]	Level [dBm]	Limit [dBm]	Margin [dB]	Factor [dB]	Angle [°]	Polarity
1	55.2200	-96.00	-63.84	-54.00	9.84	32.16	211	Horizontal
2	99.8400	-94.53	-69.91	-54.00	15.91	24.62	168	Horizontal
3	147.370	-100.17	-70.82	-36.00	34.82	29.35	202	Horizontal
4	233.700	-97.91	-66.96	-36.00	30.96	30.95	0	Horizontal
5	408.300	-94.75	-60.17	-36.00	24.17	34.58	0	Horizontal
6	600.360	-53.66	-13.55				194	Horizontal
7	895.240	-99.15	-56.19	-36.00	20.19	42.96	220	Horizontal

RESULT: PASS

Any report having not been signed by authorized approver, or having been altered without authorization, or having not been stamped by the "Dedicated Testing/Inspection Stamp" is deemed to be invalid. Copying or excerpting portion of, or altering the content of the report is not permitted without the written authorization of AGC. The test results presented in the report apply only to the tested sample. Any objections to report issued by AGC should be submitted to AGC within 15days after the issuance of the test report. Further enquiry of validity or verification of the test report should be addressed to AGC by agc@agc-cert.com.

EUT:	CARPOOL KARAOKE MICROPHONE	Model Name:	CPK565
Temperature:	25℃	Relative Humidity:	60%
Pressure:	986 Pa	Test Voltage:	Normal
Test Mode:	Transmitting at 600MHz	Polarization:	Vertical

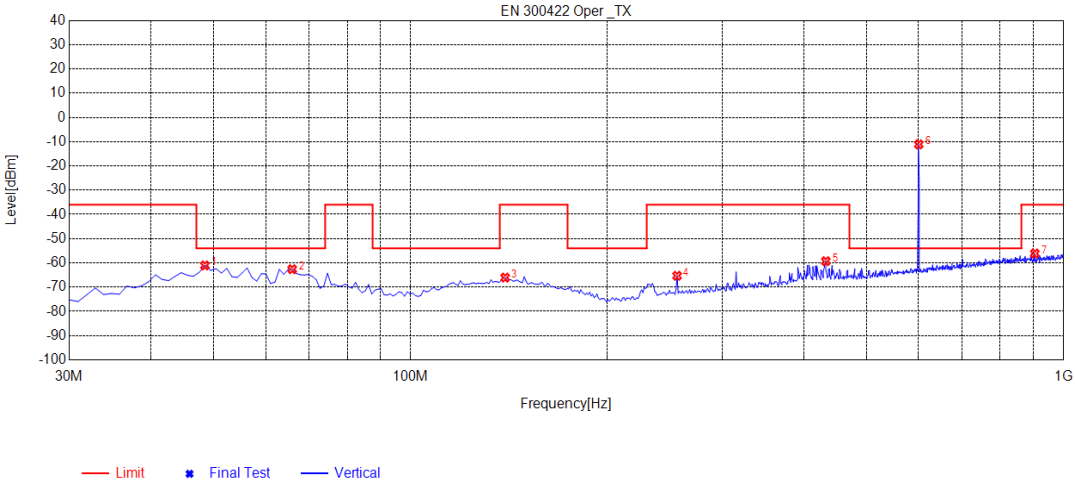

NO.	Freq. [MHz]	Reading [dBm]	Level [dBm]	Limit [dBm]	Margin [dB]	Factor [dB]	Angle [°]	Polarity
1	48.4300	-90.60	-61.05	-54.00	7.05	29.55	10	Vertical
2	65.8900	-91.93	-62.61	-54.00	8.61	29.32	287	Vertical
3	139.610	-100.43	-66.07	-36.00	30.07	34.36	209	Vertical
4	256.010	-94.66	-65.31	-36.00	29.31	29.35	10	Vertical
5	432.550	-94.74	-59.29	-36.00	23.29	35.45	192	Vertical
6	600.360	-49.83	-11.52				348	Vertical
7	903.970	-99.45	-56.10	-36.00	20.10	43.35	114	Vertical

RESULT: PASS

Note:

Factor=Antenna Factor + Cable loss, Margin=Limit−Level.

The “Factor” value can be calculated automatically by software of measurement system.

Any report having not been signed by authorized approver, or having been altered without authorization, or having not been stamped by the "Dedicated Testing/Inspection Stamp" is deemed to be invalid. Copying or excerpting portion of, or altering the content of the report is not permitted without the written authorization of AGC. The test results presented in the report apply only to the tested sample. Any objections to report issued by AGC should be submitted to AGC within 15days after the issuance of the test report. Further enquiry of validity or verification of the test report should be addressed to AGC by agc@agc-cert.com.

Attestation of Global Compliance(Shenzhen)Co., Ltd
Attestation of Global Compliance(Shenzhen)Std & Tech Co., Ltd
Tel: +86-755 2523 4088 E-mail: agc@agc-cert.com Web: http://cn.agc-cert.com/

Emission outside the band above 1000MHz

EUT:	CARPOOL KARAOKE MICROPHONE	Model Name:	CPK565
Temperature:	25℃	Relative Humidity:	60%
Pressure:	986 Pa	Test Voltage:	Normal
Test Mode:	Transmitting at 600MHz	Polarization:	Horizontal/Vertical

Frequency (MHz)	Meter Reading (dBm)	Factor (dB)	Emission Level (dBm)	Limits (dBm)	Margin (dB)	Value Type
1200.000	-35.26	-4.02	-39.28	-30	-9.28	Horizontal
1200.000	-40.59	-4.02	-44.61	-30	-14.61	Vertical
1800.000	-39.13	-1.95	-41.08	-30	-11.08	Horizontal
1800.000	-40.57	-1.95	-42.52	-30	-12.52	Vertical
Remark:						
Factor = Antenna Factor + Cable Loss – Pre-amplifier.						

RESULT: PASS

Note:

Other emissions from 1G to 6 GHz are considered as ambient noise. No recording in the test report.

The “Factor” value can be calculated automatically by software of measurement system.

Any report having not been signed by authorized approver, or having been altered without authorization, or having not been stamped by the “Dedicated Testing/Inspection Stamp” is deemed to be invalid. Copying or excerpting portion of, or altering the content of the report is not permitted without the written authorization of AGC. The test results presented in the report apply only to the tested sample. Any objections to report issued by AGC should be submitted to AGC within 15days after the issuance of the test report. Further enquiry of validity or verification of the test report should be addressed to AGC by agc@agc-cert.com.

Attestation of Global Compliance(Shenzhen)Co., Ltd
Attestation of Global Compliance(Shenzhen)Std & Tech Co., Ltd
Tel: +86-755 2523 4088 E-mail: agc@agc-cert.com Web: http://cn.agc-cert.com/

11. LINE CONDUCTED EMISSION TEST

11.1. LIMITS OF LINE CONDUCTED EMISSION TEST

Frequency	Maximum RF Line Voltage	
	Q.P. (dBμV)	Average (dBμV)
150kHz~500kHz	66-56	56-46
500kHz~5MHz	56	46
5MHz~30MHz	60	50

Note:

1. The lower limit shall apply at the transition frequency.
2. The limit decreases linearly with the logarithm of the frequency in the range 0.15 MHz to 0.50 MHz.

11.2. BLOCK DIAGRAM OF LINE CONDUCTED EMISSION TEST

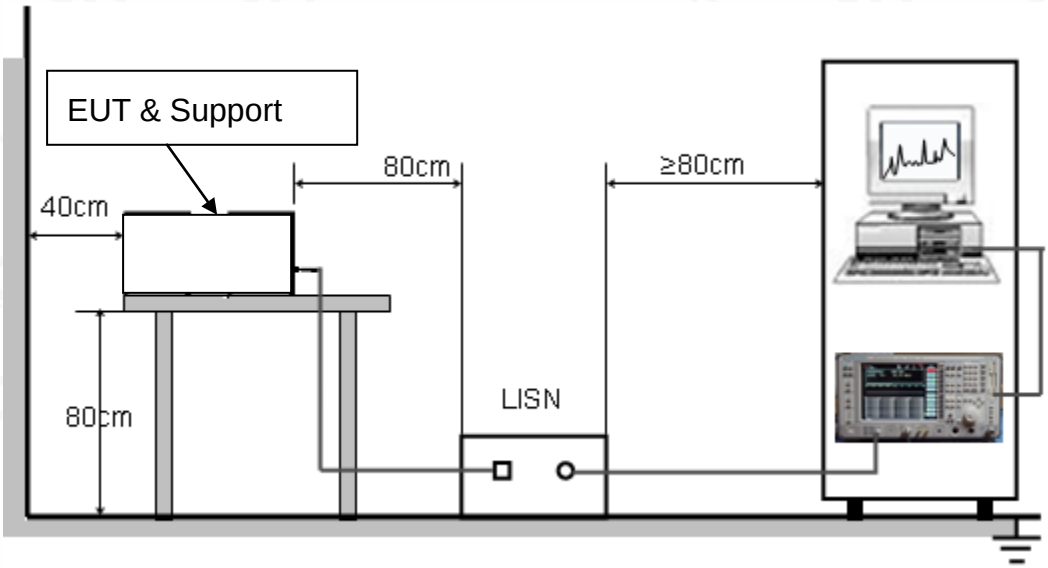

Any report having not been signed by authorized approver, or having been altered without authorization, or having not been stamped by the "Dedicated Testing/Inspection Stamp" is deemed to be invalid. Copying or excerpting portion of, or altering the content of the report is not permitted without the written authorization of AGC. The test results presented in the report apply only to the tested sample. Any objections to report issued by AGC should be submitted to AGC within 15days after the issuance of the test report. Further enquiry of validity or verification of the test report should be addressed to AGC by agc@agc-cert.com.

11.3. PRELIMINARY PROCEDURE OF LINE CONDUCTED EMISSION TEST

1. The equipment was set up as per the test configuration to simulate typical actual usage per the user's manual. When the EUT is a tabletop system, a wooden table with a height of 0.8 meters is used and is placed on the ground plane as per ANSI C63.10 (see Test Facility for the dimensions of the ground plane used). When the EUT is a floor-standing equipment, it is placed on the ground plane which has a 3-12 mm non-conductive covering to insulate the EUT from the ground plane.
2. Support equipment, if needed, was placed as per ANSI C63.10.
3. All I/O cables were positioned to simulate typical actual usage as per ANSI C63.10.
4. All support equipment received AC120V/60Hz power from a LISN, if any.
5. The EUT received DC 5V power from adapter which received AC120V/60Hz power from a LISN.
6. The test program was started. Emissions were measured on each current carrying line of the EUT using a spectrum Analyzer / Receiver connected to the LISN powering the EUT. The LISN has two monitoring points: Line 1 (Hot Side) and Line 2 (Neutral Side). Two scans were taken: one with Line 1 connected to Analyzer / Receiver and Line 2 connected to a 50 ohm load; the second scan had Line 1 connected to a 50 ohm load and Line 2 connected to the Analyzer / Receiver.
7. Analyzer / Receiver scanned from 150 kHz to 30MHz for emissions in each of the test modes.
8. During the above scans, the emissions were maximized by cable manipulation.
9. The test mode(s) were scanned during the preliminary test.

Then, the EUT configuration and cable configuration of the above highest emission level were recorded for reference of final testing.

11.4. FINAL PROCEDURE OF LINE CONDUCTED EMISSION TEST

1. EUT and support equipment was set up on the test bench as per step 2 of the preliminary test.
2. A scan was taken on both power lines, Line 1 and Line 2, recording at least the six highest emissions. Emission frequency and amplitude were recorded into a computer in which correction factors were used to calculate the emission level and compare reading to the applicable limit. If EUT emission level was less –2dB to the A.V. limit in Peak mode, then the emission signal was re-checked using Q.P and Average detector.
3. The test data of the worst case condition(s) was reported on the Summary Data page.

Any report having not been signed by authorized approver, or having been altered without authorization, or having not been stamped by the "Dedicated Testing/Inspection Stamp" is deemed to be invalid. Copying or excerpting portion of, or altering the content of the report is not permitted without the written authorization of AGC. The test results presented in the report apply only to the tested sample. Any objections to report issued by AGC should be submitted to AGC within 15days after the issuance of the test report. Further enquiry of validity or verification of the test report should be addressed to AGC by agc@agc-cert.com.

11.5. TEST RESULT OF LINE CONDUCTED EMISSION TEST

Line Conducted Emission Test Line 1-L

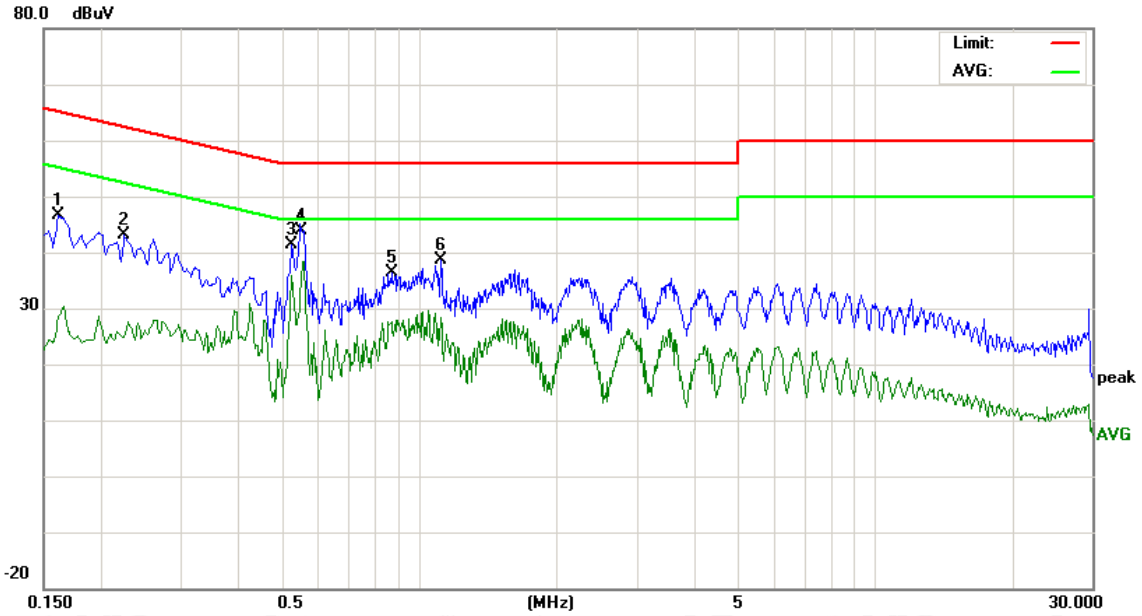

No.	Freq. (MHz)	Reading_Level (dBuV)			Correct Factor	Measurement (dBuV)			Limit (dBuV)		Margin (dB)		P/F
		Peak	QP	AVG	dB	Peak	QP	AVG	QP	AVG	QP	AVG	
1	0.1620	33.78	31.11	16.19	12.80	46.58	43.91	28.99	65.36	55.36	-21.45	-26.37	P
2	0.2260	30.23	25.85	13.31	12.91	43.14	38.76	26.22	62.59	52.59	-23.83	-26.37	P
3	0.5260	27.65	25.67	21.27	13.76	41.41	39.43	35.03	56.00	46.00	-16.57	-10.97	P
4	0.5580	29.88	29.01	24.57	13.79	43.67	42.80	38.36	56.00	46.00	-13.20	-7.64	P
5	0.8740	22.50	19.44	13.32	13.82	36.32	33.26	27.14	56.00	46.00	-22.74	-18.86	P
6	1.1180	24.79	20.93	13.16	13.80	38.59	34.73	26.96	56.00	46.00	-21.27	-19.04	P

Any report having not been signed by authorized approver, or having been altered without authorization, or having not been stamped by the "Dedicated Testing/Inspection Stamp" is deemed to be invalid. Copying or excerpting portion of, or altering the content of the report is not permitted without the written authorization of AGC. The test results presented in the report apply only to the tested sample. Any objections to report issued by AGC should be submitted to AGC within 15days after the issuance of the test report. Further enquiry of validity or verification of the test report should be addressed to AGC by agc@agc-cert.com.

Line Conducted Emission Test Line 2-N

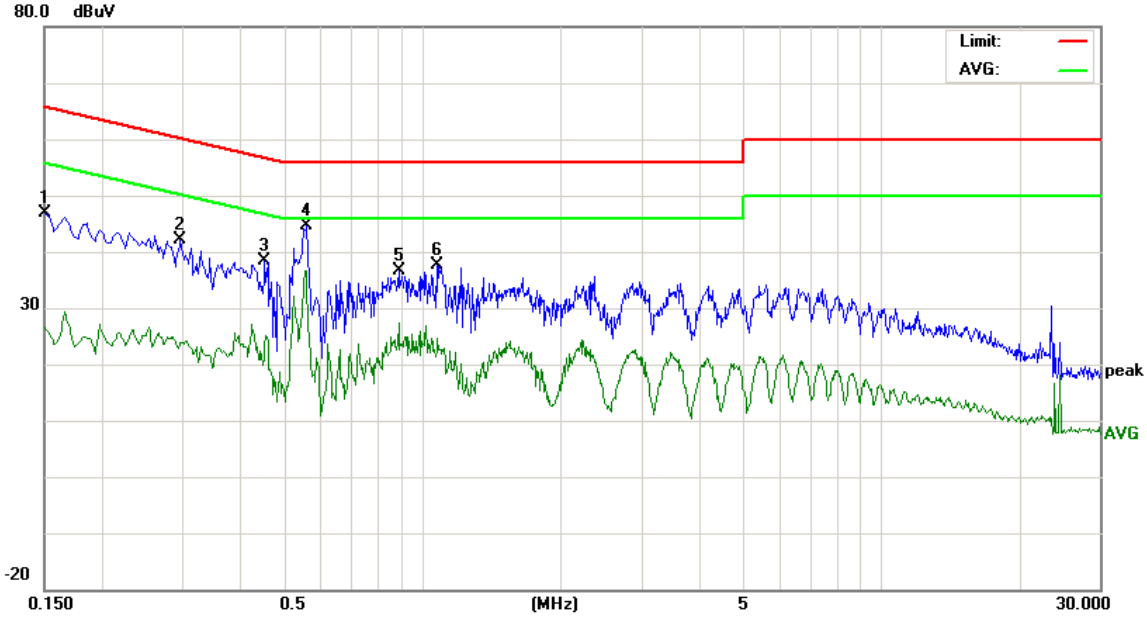

No.	Freq. (MHz)	Reading_Level (dBuV)			Correct Factor	Measurement (dBuV)			Limit (dBuV)		Margin (dB)		P/F
		Peak	QP	AVG	dB	Peak	QP	AVG	QP	AVG	QP	AVG	
1	0.1500	34.12	30.30	14.11	12.78	46.90	43.08	26.89	65.99	55.99	-22.91	-29.10	P
2	0.2980	29.09	24.61	12.19	13.00	42.09	37.61	25.19	60.30	50.30	-22.69	-25.11	P
3	0.4540	24.86	20.92	10.67	13.63	38.49	34.55	24.30	56.80	46.80	-22.25	-22.50	P
4	0.5580	30.09	29.75	24.01	13.79	43.88	43.54	37.80	56.00	46.00	-12.46	-8.20	P
5	0.8900	22.77	19.31	11.77	13.83	36.60	33.14	25.60	56.00	46.00	-22.86	-20.40	P
6	1.0780	23.92	14.91	8.20	13.80	37.72	28.71	22.00	56.00	46.00	-27.29	-24.00	P

RESULT: PASS

Any report having not been signed by authorized approver, or having been altered without authorization, or having not been stamped by the "Dedicated Testing/Inspection Stamp" is deemed to be invalid. Copying or excerpting portion of, or altering the content of the report is not permitted without the written authorization of AGC. The test results presented in the report apply only to the tested sample. Any objections to report issued by AGC should be submitted to AGC within 15days after the issuance of the test report. Further enquiry of validity or verification of the test report should be addressed to AGC by agc@agc-cert.com.

Attestation of Global Compliance(Shenzhen)Co., Ltd
Attestation of Global Compliance(Shenzhen)Std & Tech Co., Ltd
Tel: +86-755 2523 4088 E-mail: agc@agc-cert.com Web: http://cn.agc-cert.com/

APPENDIX A: PHOTOGRAPHS OF TEST SETUP

RADIATED EMISSION TEST SETUP BELOW 1GHZ

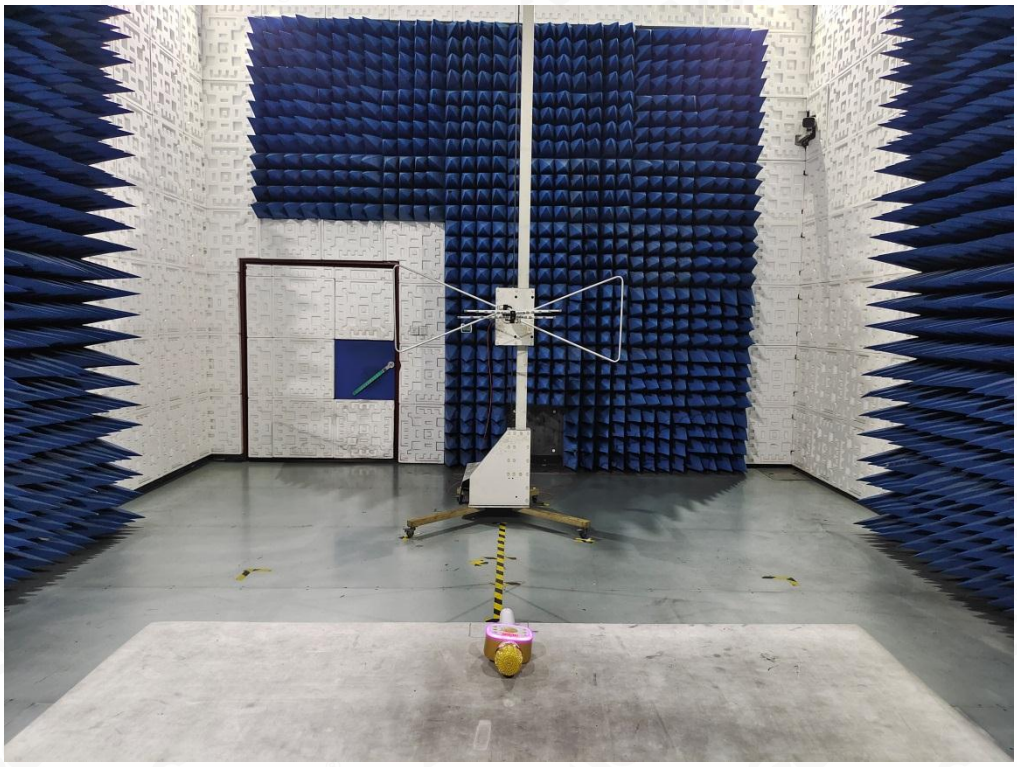

RADIATED EMISSION TEST SETUP ABOVE 1GHZ

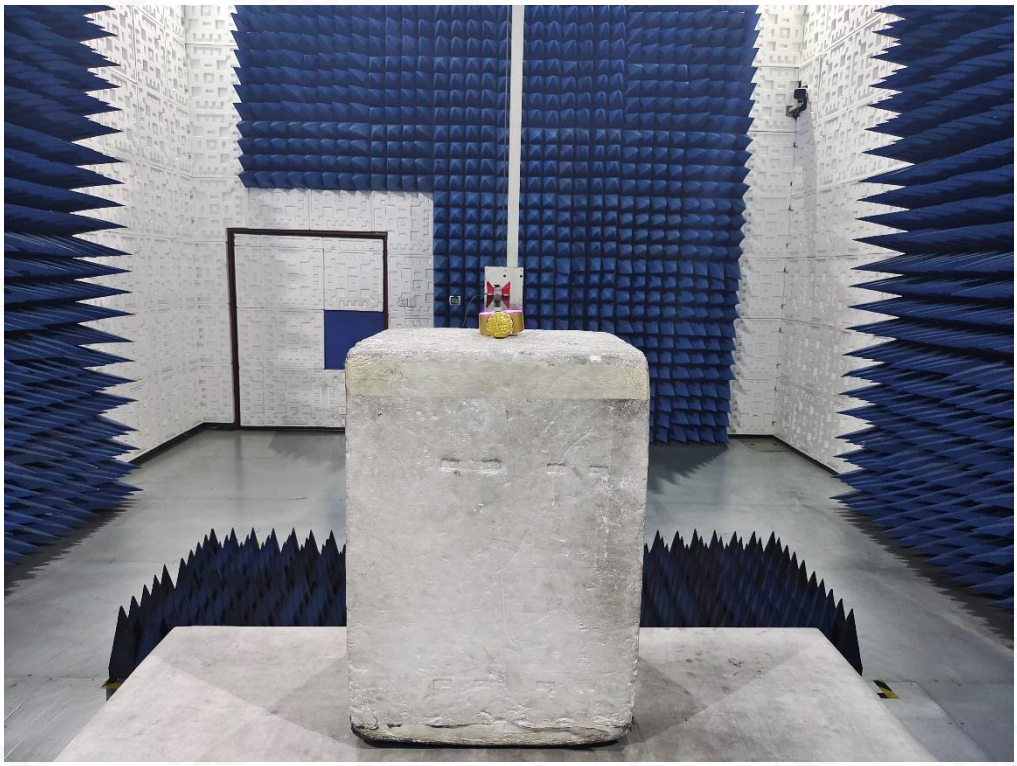

Any report having not been signed by authorized approver, or having been altered without authorization, or having not been stamped by the "Dedicated Testing/Inspection Stamp" is deemed to be invalid. Copying or excerpting portion of, or altering the content of the report is not permitted without the written authorization of AGC. The test results presented in the report apply only to the tested sample. Any objections to report issued by AGC should be submitted to AGC within 15days after the issuance of the test report. Further enquiry of validity or verification of the test report should be addressed to AGC by agc@agc-cert.com.

CONDUCTED EMISSION TEST SETUP

Any report having not been signed by authorized approver, or having been altered without authorization, or having not been stamped by the "Dedicated Testing/Inspection Stamp" is deemed to be invalid. Copying or excerpting portion of, or altering the content of the report is not permitted without the written authorization of AGC. The test results presented in the report apply only to the tested sample. Any objections to report issued by AGC should be submitted to AGC within 15days after the issuance of the test report. Further enquiry of validity or verification of the test report should be addressed to AGC by agc@agc-cert.com.

APPENDIX B: PHOTOGRAPHS OF EUT

Refer to the Report No.: AGC04138210303AP02

----END OF REPORT----

Any report having not been signed by authorized approver, or having been altered without authorization, or having not been stamped by the "Dedicated Testing/Inspection Stamp" is deemed to be invalid. Copying or excerpting portion of, or altering the content of the report is not permitted without the written authorization of AGC. The test results presented in the report apply only to the tested sample. Any objections to report issued by AGC should be submitted to AGC within 15days after the issuance of the test report. Further enquiry of validity or verification of the test report should be addressed to AGC by agc@agc-cert.com.

Attestation of Global Compliance(Shenzhen)Co., Ltd
Attestation of Global Compliance(Shenzhen)Std & Tech Co., Ltd
Tel: +86-755 2523 4088 E-mail: agc@agc-cert.com Web: http://cn.agc-cert.com/

Conditions of Issuance of Test Reports

1. All samples and goods are accepted by the Attestation of Global Compliance (Shenzhen) Co., Ltd (the "Company") solely for testing and reporting in accordance with the following terms and conditions. The company provides its services on the basis that such terms and conditions constitute express agreement between the company and any person, firm or company requesting its services (the "Clients").

2. Any report issued by Company as a result of this application for testing services (the "Report") shall be issued in confidence to the Clients and the Report will be strictly treated as such by the Company. It may not be reproduced either in its entirety or in part and it may not be used for advertising or other unauthorized purposes without the written consent of the Company. The Clients to whom the Report is issued may, however, show or send it, or a certified copy thereof prepared by the Company to its customer, supplier or other persons directly concerned. The Company will not, without the consent of the Clients, enter into any discussion or correspondence with any third party concerning the contents of the Report, unless required by the relevant governmental authorities, laws or court orders.

3.The Company shall not be called or be liable to be called to give evidence or testimony on the Report in a court of law without its prior written consent, unless required by the relevant governmental authorities, laws or court orders.

4. The non-CMA report issued by AGC is only permitted to be used by the client as internal reference use and shall not be used for public demonstration purpose.

5. In the event of the improper use of the report as determined by the Company, the Company reserves the right to withdraw it, and to adopt any other additional remedies which may be appropriate.

6. Samples submitted for testing are accepted on the understanding that the Report issued cannot form the basis of, or be the instrument for, any legal action against the Company.

7. The Company will not be liable for or accept responsibility for any loss or damage however arising from the use of information contained in any of its Reports or in any communication whatsoever about its said tests or investigations.

8.Clients wishing to use the Report in court proceedings or arbitration shall inform the Company to that effect prior to submitting the sample for testing.

9. The Company is not responsible for recalling the electronic version of the original report when any revision is made to them. The Client assumes the responsibility to providing the revised version to any interested party who uses them.

10. Subject to the variable length of retention time for test data and report stored hereinto as otherwise specifically required by individual accreditation authorities, the Company will only keep the supporting test data and information of the test report for a period of six years. The data and information will be disposed of after the aforementioned retention period has elapsed. Under no circumstances shall we provide any data and information which has been disposed of after retention period. Under no circumstances shall we be liable for damage of any kind, including (but not limited to) compensatory damages, lost profits, lost data, or any form of special, incidental, indirect, consequential or punitive damages of any kind, whether based on breach of contract of warranty, tort (including negligence), product liability or otherwise, even if we are informed in advance of the possibility of such damages.

Any report having not been signed by authorized approver, or having been altered without authorization, or having not been stamped by the "Dedicated Testing/Inspection Stamp" is deemed to be invalid. Copying or excerpting portion of, or altering the content of the report is not permitted without the written authorization of AGC. The test results presented in the report apply only to the tested sample. Any objections to report issued by AGC should be submitted to AGC within 15days after the issuance of the test report. Further enquiry of validity or verification of the test report should be addressed to AGC by agc@agc-cert.com.

Attestation of Global Compliance(Shenzhen)Co., Ltd
Attestation of Global Compliance(Shenzhen)Std & Tech Co., Ltd
Tel: +86-755 2523 4088 E-mail: agc@agc-cert.com Web: http://cn.agc-cert.com/