singing machine®

creating **Joy** through music™

SML625BTBK / SML625BTW

INSTRUCTION MANUAL

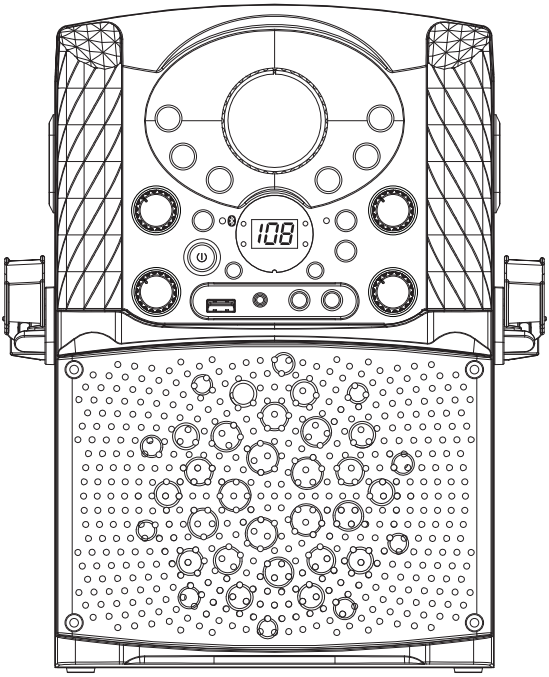

www.singingmachine.com

The Singing Machine® is a registered trademark of The Singing Machine Co., Inc.

Warnings

CAUTION

RISK OF ELECTRIC SHOCK
DO NOT OPEN

CAUTION: TO REDUCE THE RISK OF ELECTRIC SHOCK, DO NOT REMOVE COVER (OR BACK). NO USER-SERVICEABLE PARTS INSIDE. REFER SERVICING TO QUALIFIED SERVICE PERSONNEL.
The Caution marking is located on the bottom panel.

DANGEROUS VOLTAGE: The lightning flash with arrowhead symbol within an equilateral triangle is intended to alert the user to the presence of uninsulated dangerous voltage within the product's enclosure that may be of sufficient magnitude to constitute a risk of electric shock to persons.

ATTENTION: The exclamation point within an equilateral triangle is intended to alert the user to the presence of important operating and maintenance (servicing) instructions in the literature accompanying this product.

DRIPPING WARNING: This product shall not be exposed to dripping or splashing, and no objects filled with liquids, such as vases, shall be placed on the product.
VENTILATION WARNING: The normal ventilation of the product shall not be impeded for intended use.
SAFETY VERIFICATION: This device is made and tested to meet safety standards of the FCC, requirements and compliance with safety performance of the U.S. Department of Health and Human Services and also with FDA Radiation Performance Standards 21 CFR Subchapter.

Warnings:
- This CD player employs a laser light beam. Only a qualified service person should remove the cover or attempt to service this device, due to possible eye injury.
- The use of controls, adjustments, or procedures other than those specified herein might result in hazardous radiation exposure.
- The apparatus shall be used in an open area.

CAUTION!
Invisible laser radiation when open and interlocks defeated. Avoid exposure to beam.

WARNING: TO PREVENT FIRE OR SHOCK HAZARD, DO NOT EXPOSE THIS UNIT TO RAIN OR MOISTURE.

FCC WARNING: This equipment may generate or use radio frequency energy. Changes or modifications to this equipment may cause harmful interference unless the modifications are expressly approved in the instruction manual. The user could lose the authority to operate this equipment if an unauthorized change or modification is made.

This device complies with part 15 of the FCC Rules. Operation is subject to the following two conditions: (1) This device may not cause harmful interference, and (2) this device must accept any interference received, including interference that may cause undesired operation.

NOTE: This equipment has been tested and found to comply with the limits for a Class B digital device, pursuant to part 15 of the FCC Rules. These limits are designed to provide reasonable protection against harmful interference in a residential installation. This equipment generates, uses and can radiate radio frequency energy and, if not installed and used in accordance with the instructions, may cause harmful interference to radio communications. However, there is no guarantee that interference will not occur in a particular installation. If this equipment does cause harmful interference to radio or television reception, which can be determined by turning the equipment off and on, the user is encouraged to try to correct the interference by one or more of the following measures:
- Reorient or relocate the receiving antenna.
- Increase the separation between the equipment and receiver.
- Connect the equipment into an outlet on a circuit different from that to which the receiver is connected.
- Consult the dealer or an experienced radio/TV technician for help.

The rating information is located at the rear of the unit.

INDUSTRY CANADA NOTICE:
This device complies with Industry Canada license-exempt RSS standard(s). Operation is subject to the following two conditions:
1. This device may not cause interference, and
2. This device must accept any interference, including interference that may cause undesired operation of the device.

CAN ICES-3(B)/NMB-3(B)

Class II equipment symbol.
This symbol indicates that the unit has a double insulation system.

Important Safety Information

1. Read these Instructions.
2. Keep these Instructions.
3. Heed all Warnings.
4. Follow all Instructions.
5. Do not use this apparatus near water.
6. Clean only with a dry cloth.
7. Do not block any of the ventilation openings. Install in accordance with the Manufacturer's instructions.
8. Do not install near any heat sources such as radiators, heat registers, stoves, or other apparatus (including amplifiers) that produce heat.
9. Do not defeat the safety purpose of the polarized or grounding-type plug. A polarized plug has two blades with one wider than the other. A grounding type plug has two blades and a third grounding prong. The wide blade or the third prong are provided for your safety. When the provided plug does not fit into your outlet, consult an electrician for replacement of the obsolete outlet.
10. Protect the power cord from being walked on or pinched particularly at plugs, convenience receptacles, and the point where they exit from the apparatus.
11. Only use attachments/accessories specified by the manufacturer.
12. Use only with a cart, stand, tripod, bracket, or table specified by the manufacturer, or sold with the apparatus. When a cart is used, use caution when moving the cart/apparatus combination to avoid injury from tip-over.

PORTABLE CART WARNING
(symbol provided by RETAC)

13. Unplug this apparatus during lightning storms or when unused for long periods of time.
14. Refer all servicing to qualified service personnel. Servicing is required when the apparatus has been damaged in any way, such as power-supply cord or plug is damaged, liquid has been spilled or objects have fallen into the apparatus, the apparatus has been exposed to rain or moisture, does not operate normally, or has been dropped.
15. WARNING: To reduce the risk of fire or electric shock, do not expose this apparatus to rain or moisture. Do not place objects filled with water, such as a vase, on the apparatus.
16. The AC mains plug is used as the power disconnect device and it should remain readily accessible and operable during intended use. In order to completely disconnect the apparatus from power, the mains plug should be completely removed from the AC outlet socket.
17. CAUTION: To reduce the risk of fire or explosion, do not expose batteries to excessive heat such as sunshine, fire or other heat sources.

Included

Please make sure that the following items are included.

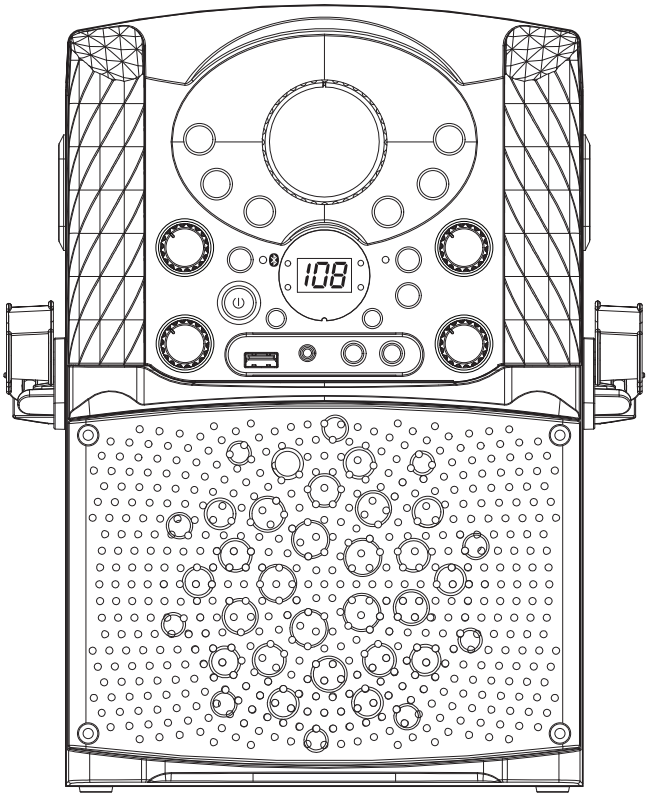

Main Unit

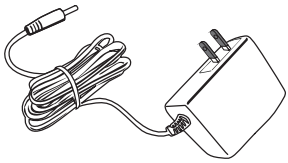

AC Adapter

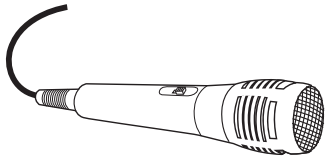

Wired Microphone

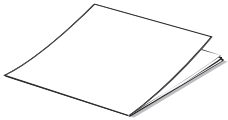

Manual

Audio/Video Cables

Location of Controls (Front)

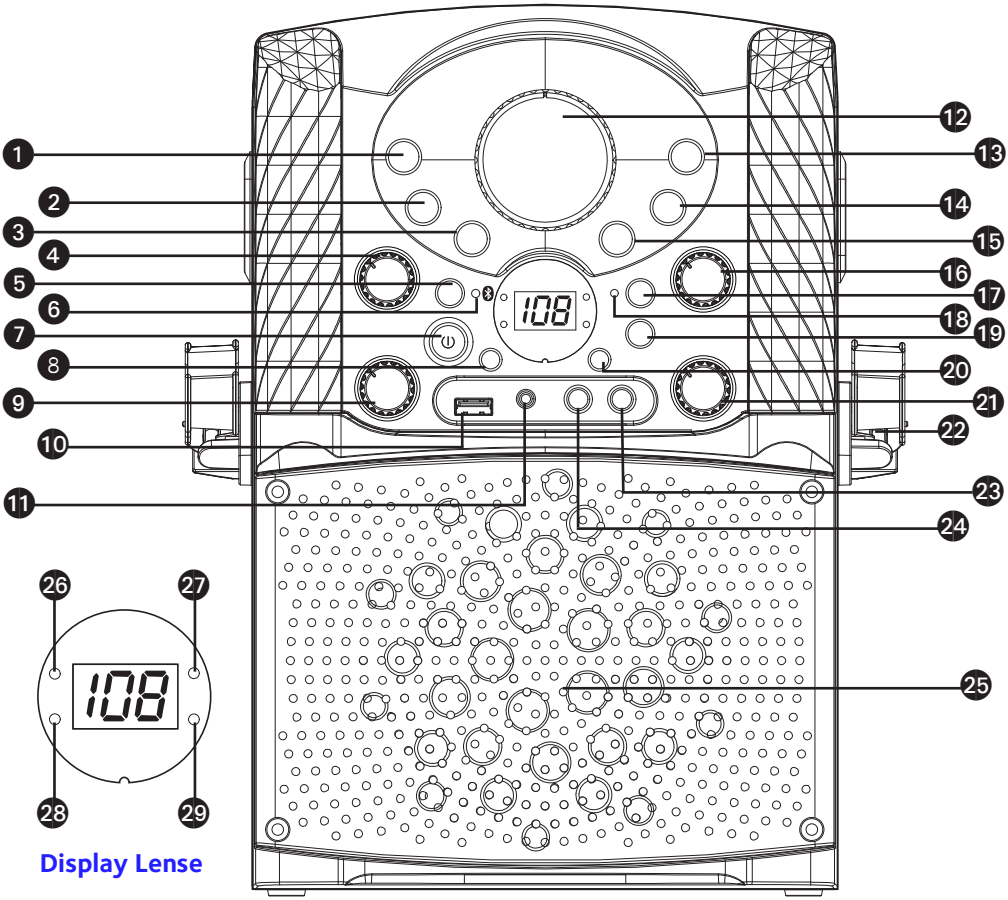

1. CD/USB/BT Button
2. PROGRAM/REPEAT Button
3. Skip Back ⏮Button
4. AUTO VOICE CONTROL Button
5. BLUETOOTH PAIRING Button
6. BLUETOOTH indicator
7. ON/OFF Button
8. Skip10- Button (MP3)
9. BALANCE Control
10. USB Port
11. LINE IN Jack
12. MASTER VOLUME Control
13. Play/Pause ▶II Button
14. Stop ■ Button
15. Skip Forward ⏭ Button
16. MIC VOLUME control
17. RECORD Button
18. Record Indicator
19. DISCO LIGHT Button
20. Skip10+ Button (MP3)
21. ECHO Control
22. Mic Holder
23. Mic 2 jack
24. Mic 1 jack
25. Speaker
26. CDG Indicator
27. Play/Pause Indicator
28. Program Indicator
29. Repeat Indicator

Location of Controls (Top/Rear)

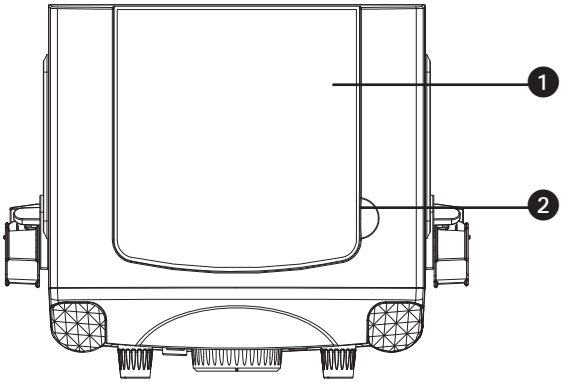

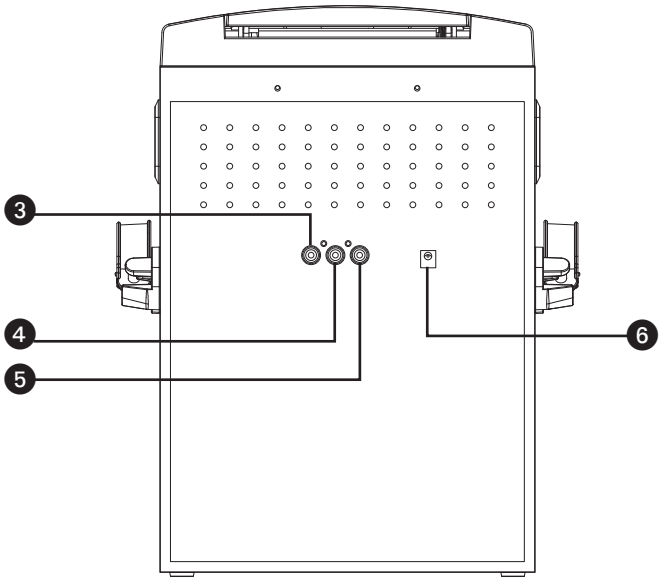

TOP VIEW

1. CD Door
2. CD open

REAR VIEW

3. VIDEO OUT Jack
4. AUDIO OUT Jack (R)
5. AUDIO OUT Jack (L)
6. DC IN Jack (5.8V)

Connection

Connecting the Microphone(s)

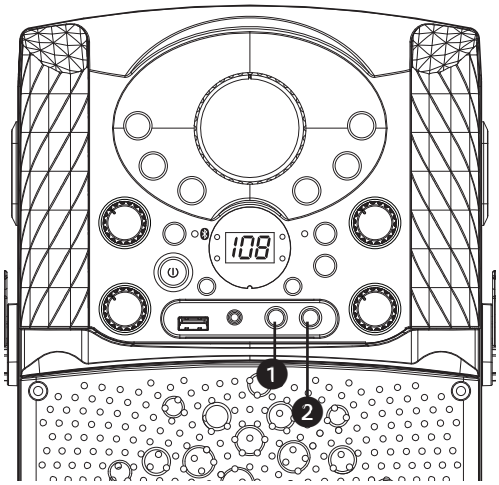

Microphones:
Connect a microphone into MIC jack 1 as well as MIC jack 2 (when desired).

Note: Do not drop or tap the Mic as damage to the Mic or speakers may occur. Do not twirl the microphone cord as it will cause damage to the encased wiring.

Connecting the Unit to a TV

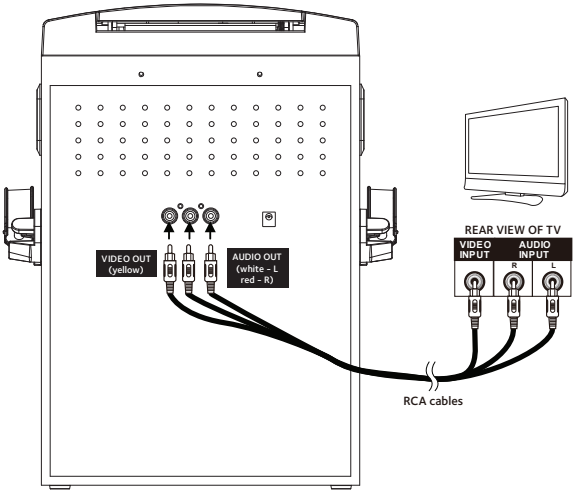

To output the video, lyrics and audio to your TV, perform the following steps:

Connect the RCA video cable (Yellow) to the VIDEO OUT jack and the audio cables (White and Red) to the AUDIO OUT jacks located on the back of the Singing Machine.
Connect the opposite end of the RCA video cable (Yellow) to the VIDEO IN jack and the audio cables (White and Red) to the AUDIO IN on your TV.

Notes:
- This unit can be used with or without a TV, but it is highly recommended to use a TV in order to utilize all the features.
- Also refer to the TV's User Guide.
- To see the lyrics on the screen, you must use a CD+G disc.

Connection

Connecting to AC Power

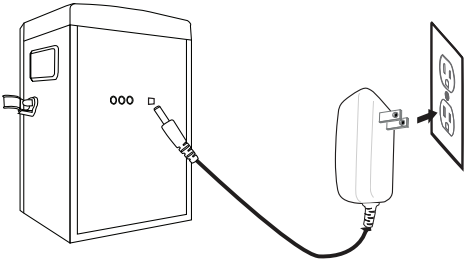

Insert the AC power cord into a conveniently located AC outlet having 120V AC, 60Hz.

Note:
Make all connections before connecting to AC power.

Connecting to LINE IN Jack

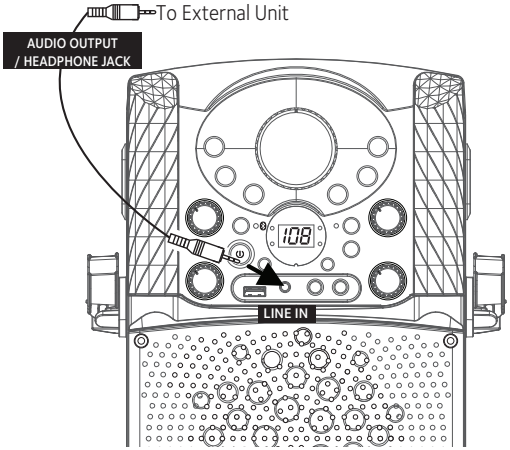

Connect an external device by using an appropriate cable (3.5mm audio cable not included) as shown.

Note:
See page 17 to select and use the LINE IN function.

Disco Lights

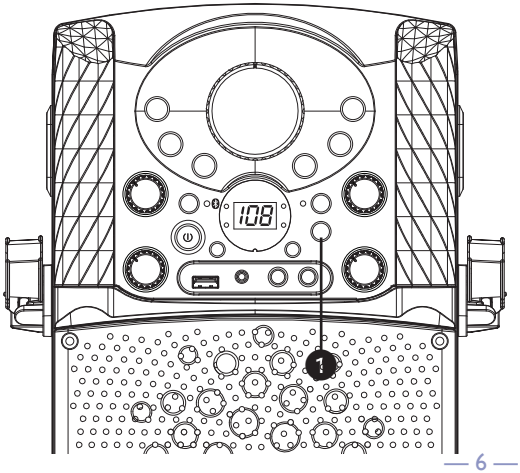

1 Press the **LIGHT** button to switch on the lighting effect, press again to switch off.

Operation

Playing a CDG

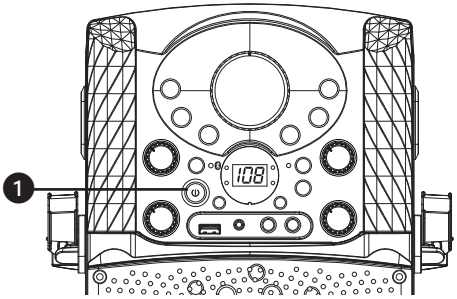

1 Connect the unit as described previously; if using a CD+G, it is recommended to connect to a TV (see page 5). Press the power **ON/OFF** button to turn the unit on.

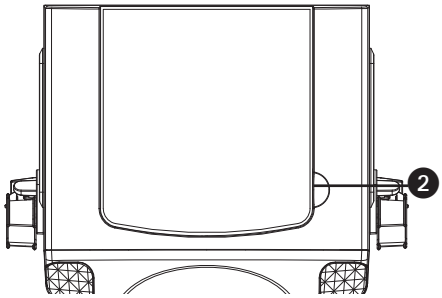

2 Lift open the CD door and insert a CD or a CD+G by gently pressing it on the center spindle. Then close the CD door.

Note:

- **What is a CD+G?**
  A CD+G (CD+Graphics) is the standard format for most karaoke discs that will display the words on the screen.
- Never place anything other than a CD in the compartment, as foreign objects can damage the unit.
- If no disc is inserted, "NO" will appear on the display.
- If connected to a TV and/or other audio source, adjust the volume of the external unit using its own volume control.

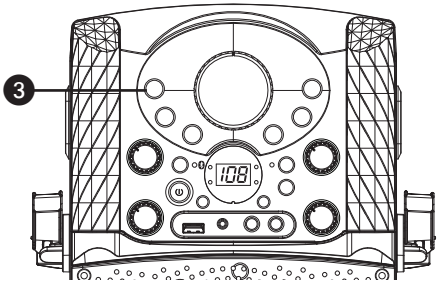

3 Repeatedly press the **CDG/USB/BT** button to select the CDG mode; "---" will appear when searching the disc and then the total number of tracks will appear. When a CDG disc is inserted, the CDG indicator will light.

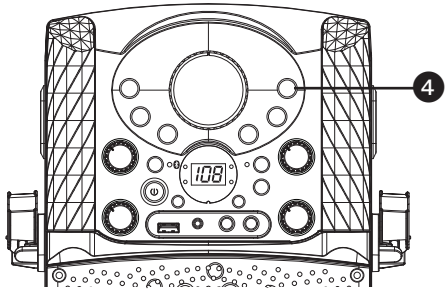

4 Press the **Play/Pause ►II** button to start playback; if listening to a CD+G file, the image and lyrics will appear on the TV screen (if connected) and the PLAY/PAUSE Indicator will light.

Operation

Playing a CDG (Continued)

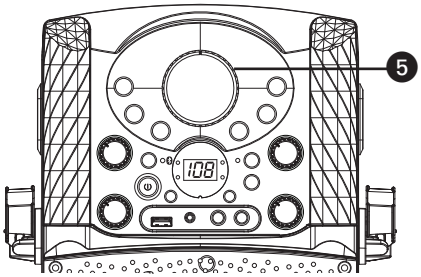

5 Adjust the volume to a comfortable level using the **MASTER VOLUME** control.

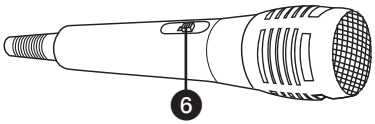

6 Connect microphone(s) as shown on page 5, and slide the **ON/OFF** switch on the microphone to the ON position.

7 Adjust the **MIC VOLUME** control as desired. Increasing this control will increase the volume of both microphones.

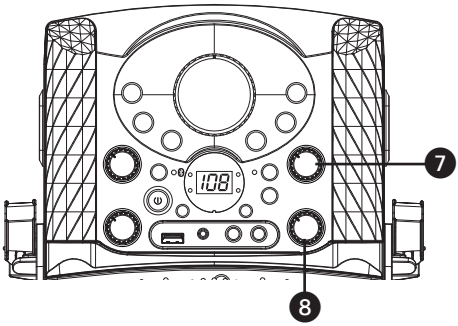

8 Rotate the **ECHO** control to add an echo effect to your voice. Rotate towards MAX to increase the echo effect.

9 AUTO VOICE CONTROL can be activated by rotating the **AVC** control. The higher this control is set to, the more the vocals on the multiplex recording will be muted when the singer starts to sing through the microphone. When the singer stops singing, the recorded vocals on the multiplex recording will resume to normal.

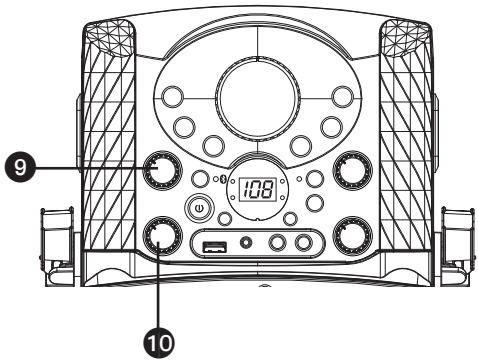

10 Rotate the **BALANCE** control clockwise to hear the music and recorded vocals from a multiplex recording or counterclockwise to hear the music only from a multiplex recording.
Note: To use the BALANCE control, a CD+G disc must be used, otherwise it will operate as a standard Balance control.

Operation

Playing a CDG (Continued)

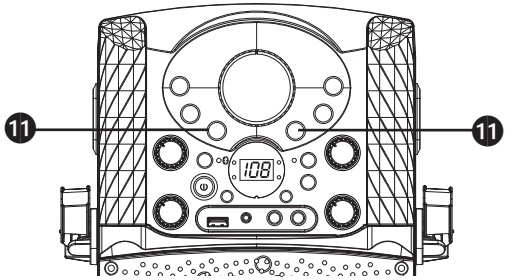

11 **SKIP:** Advance or go back one track by pressing the **Skip Back ⏮/Skip Forward ⏭** buttons.

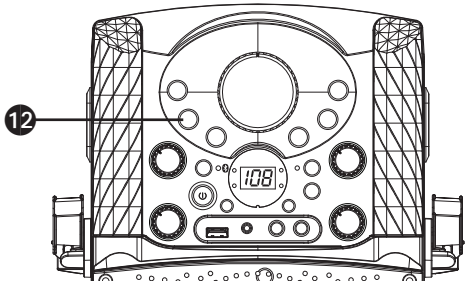

12 **REPEAT**: During playback, press the **PROG/REP** button once to repeatedly play the selected song; the Repeat indicator will blink. Press the **PROG/REP** button a second time to repeatedly play the whole CD; the Repeat indicator will light solid. Press it again to cancel Repeat function, the **PROG/REP** indicator turns off.

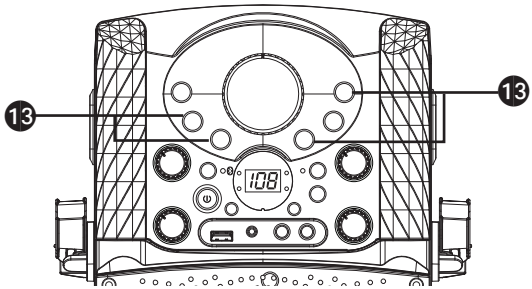

13 **PROGRAM:** You can program up to 20 tracks on any disc for playback in any desired order. While in the Stop mode, press the **PROG /REP** button; the Program indicator will blink and "P00" will appear. Select the first track using the **Skip Back ⏮/ Skip Forward ⏭** buttons. Press the **PROG/REP** button again to confirm the entry. After selecting the desired tracks the display will show P01, P02, etc. recognizing the tracks selected have been programmed and the program indicator will illuminate solid red. Repeat to set up to 20 tracks into memory. When done, press the **Play/Pause ▶II** button to start playback.

Note:

- Press the **Stop ■** button TWICE to stop and clear the program.

Operation

Playing a CDG (Continued)

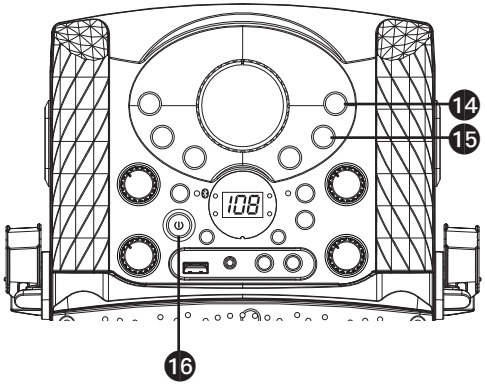

14 **PAUSE**: During playback, if you wish to pause the disc momentarily, press the **Play/Pause** ▶II button; the PLAY/PAUSE indicator will blink. Press again to resume normal playback.

15 Press the **Stop** ■ button to stop playback.

16 Press the power **ON/OFF** button to turn the unit off.

Operation

Playing Songs from the USB

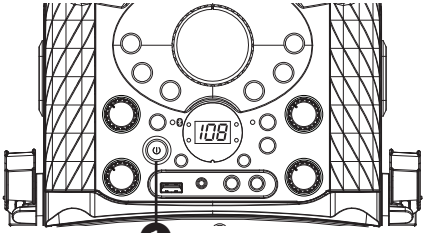

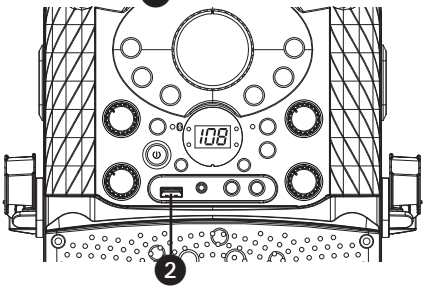

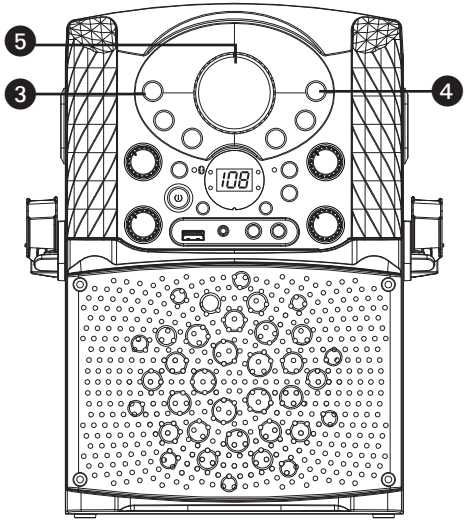

1 Connect the unit as described previously (see page 6). Press the power **ON/OFF** button to turn the unit on.

2 Insert a USB flash drive into the USB port on the unit so it faces upward. Make sure to download music from the Karaoke store, see page 21.

3 Repeatedly press the **CDG/USB/BT** button to select the USB mode; "usb" will appear when searching the drive and then the total number of files will appear.

Note: The USB mode cannot be accessed until a flash drive is inserted.

4 Press the **Play/Pause** ▶II button to start playback; if listening to an MP3+G file, the image and lyrics will appear on the TV screen (if connected).

5 Adjust the volume to a comfortable level using the **MASTER VOLUME** control.

Note: If connected to a TV or other audio source, adjust the volume of the TV using its own volume control.

Operation

Playing Songs from the USB (Continued)

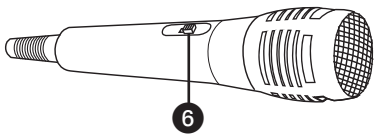

6 Connect microphone(s) as shown on page 5, and slide the **ON/OFF** switch on the microphone to the ON position.

7 Adjust the **MIC VOLUME** control as desired. Increasing this control will increase the volume of both microphones.

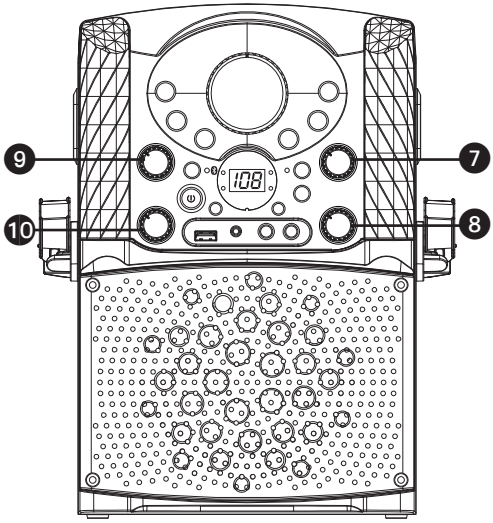

8 Rotate the **ECHO** control to add an echo effect to your voice. Rotate towards MAX to increase the echo effect.

9 AUTO VOICE CONTROL can be activated by rotating the **AVC** control. The higher this control is set to, the more the vocals on the multiplex recording will be muted when the singer starts to sing through the microphone. When the singer stops singing, the recorded vocals on the multiplex recording will resume to normal.

10 Rotate the **BALANCE** control clockwise to hear the music and recorded vocals from a multiplex recording or counterclockwise to hear the music only from a multiplex recording.

Operation

Playing Songs from the USB (Continued)

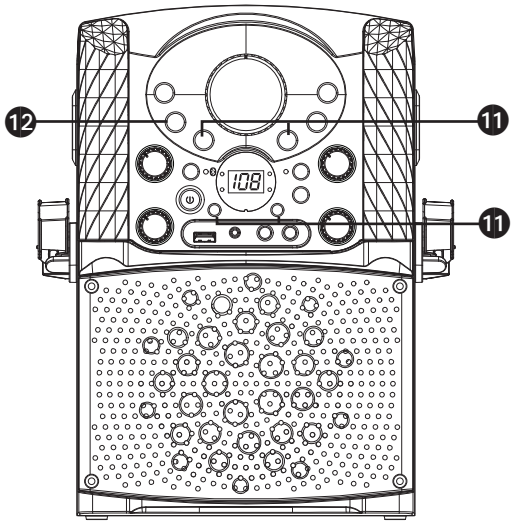

11 **SKIP:** Advance or go back one track by pressing the ⏮ or ⏭ buttons. You can also skip ahead or back 10 tracks using the **Skip10+** button or **Skip10−** button.

SEARCH: When playing any audio from the USB, press and hold the ⏮ or ⏭ buttons. The USB will search at high speed in the forward or backward direction. Normal play will continue when you release the button.
During Stop mode you can also select a file using the ⏮ or ⏭ buttons to scroll right/left.

12 **REPEAT:** During playback, press the **REP/PROG** button once during playback, the **REP** indicator will blink and the current track will be repeated. Press the **REP/PROG** button twice, the **REP** indicator will blink, all MP3 tracks inside the current folder will be repeated continuously. Press the **REP/PROG** button three time, the **REP** indicator will light solid, all MP3 tracks will be repeatedly. To stop repeat function by press the button again, the **REP** indicator will turns off.

Operation

Playing Songs from the USB (Continued)

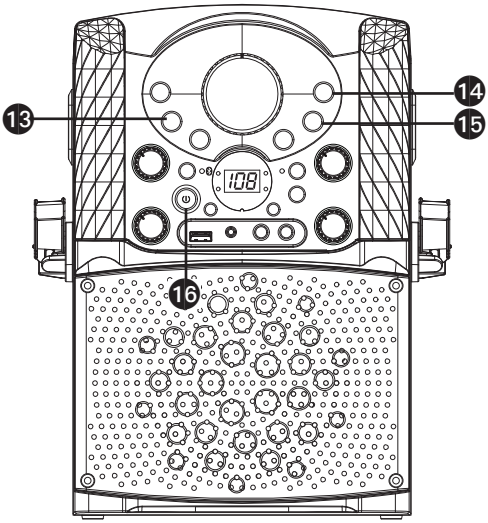

13 **PROGRAM:** You can program up to 20 tracks for playback in any desired order. While in Stop mode, press the **REP/PROG** button; **PROG** indicator will blink and "P00"appear. Select the first track using ⏮ or ⏭ buttons, then press the **REP/PROG** button. Repeat to set up to 20 tracks into memory. When done, press the **Play/Pause** ▶II button to start playback.

Note: Press the **Stop** ■ button TWICE to stop and clear the program.

14 **PAUSE**: During playback, if you wish to pause the music momentarily, press the **Play/Pause** ▶II **/ ENTER** button. Press again to resume normal playback.

15 Press the **Stop** ■ button to stop playback.

16 Press the **ON/OFF** button to turn the unit off.

Operation

Using a Bluetooth Device

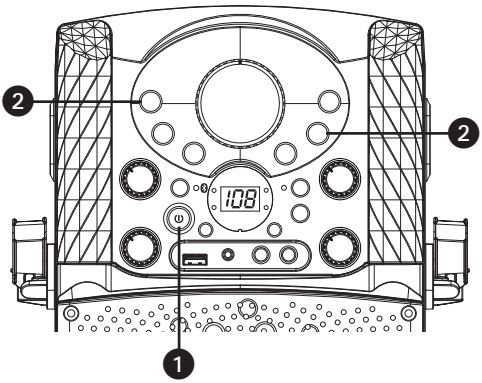

1 Connect the unit as described previously. Press the power **ON/OFF** button to turn the unit on.

2 Repeatedly press the **CDG/USB/BT** button to select the Bluetooth mode; "bt" will blink in the display as the unit automatically searches for and pairs a previously paired Bluetooth device (if previously paired). If no previously paired devices are present, connect as shown in the next step.

Note: You can also press the **PAIR** button to disconnect any paired devices in order to pair another device.

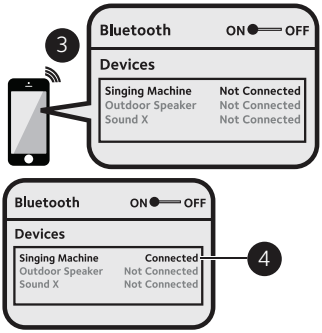

3 Turn on your device's Bluetooth option in settings to search for a discoverable device with a Bluetooth signal. Select "**Singing Machine**" from the device results on the Bluetooth menu, "bt" will light solid in the display. The Bluetooth indicator will light and a successful pairing sound will be heard.

Note: Also refer to the user manual of your Bluetooth device for detailed instructions.

4

Notes:

- If your Bluetooth prompts you for a passcode during the pairing process, please enter "0000" to connect.
- On some Bluetooth devices, once pairing is complete, select your Bluetooth device as "Use as Audio Device" or similar.
- If connection is lost after successful pairing, check to make sure the distance between speaker and Bluetooth-enabled device does not exceed 30 feet/10 meters.
- "Bluetooth" will blink on TV screen, and will stop blinking after successful connection.

Operation

Using a Bluetooth Device (Continued)

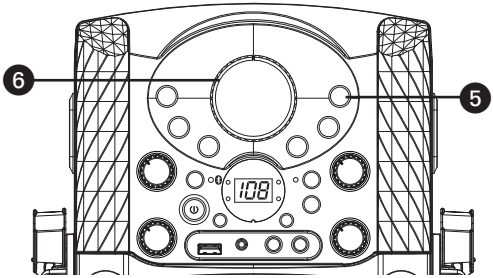

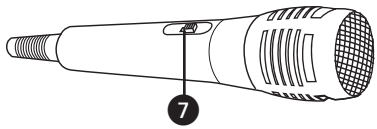

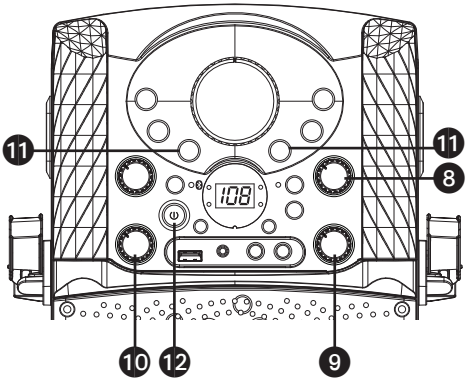

5 To control your Bluetooth device from this unit, press the **Play/Pause ▶II** button to start playback. Press the **Play/Pause ▶II** button during playback to pause the song.

6 Adjust the volume to a comfortable level using the **MASTER VOLUME** control on this unit as well as the volume on your Bluetooth device.

7 Connect microphone(s) as shown on page 5, and slide the **ON/OFF** switch on the microphone to the ON position.

8 Adjust the **MIC VOLUME** control as desired. Increasing this control will increase the volume of both microphones.

9 Rotate the **ECHO** control to add an echo effect to your voice. Rotate towards MAX to increase the echo effect.

10 Adjust the balance between the speakers using the **BALANCE** control.

11 **SKIP:** Advance or go back one track by pressing the **Skip Back ⏮/Skip Forward ⏭** buttons.

12 Press the power **ON/OFF** button to turn the unit off.

Operation

Using the LINE IN Jack

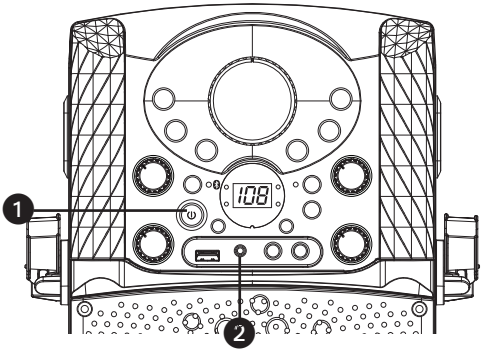

1 Connect the unit as described previously (see page 6). Press the power **ON/OFF** button to turn the unit on.

2 Connect the external unit to the LINE IN Jack on the front of this unit. Connecting an external unit will allow the audio to be played through your Singing Machine. LINE IN function is automatically selected once the audio cable is plugged in.

Notes:

- It is highly recommended to set the volume on the auxiliary unit to 1/3 or lower to avoid distortion.
- Skipping files/tracks is not possible on this unit when using an external device.

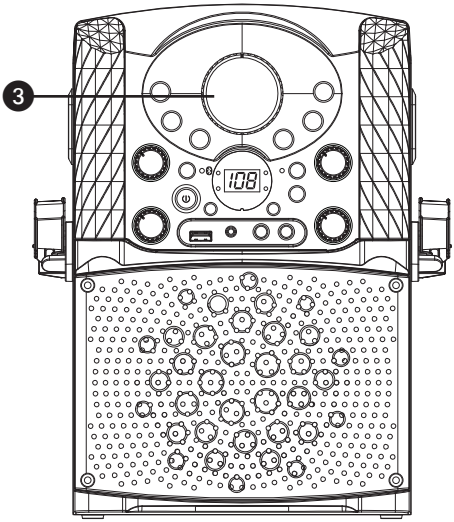

3 Adjust the volume using the **MASTER VOLUME** control on this unit or your external device's volume control.

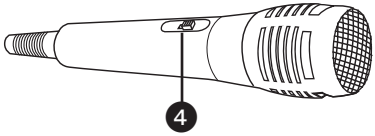

4 Connect microphone(s) as shown on page 5. Slide the **ON/OFF** switch on the microphone to the ON position.

Operation

Using the LINE IN Jack (Continued)

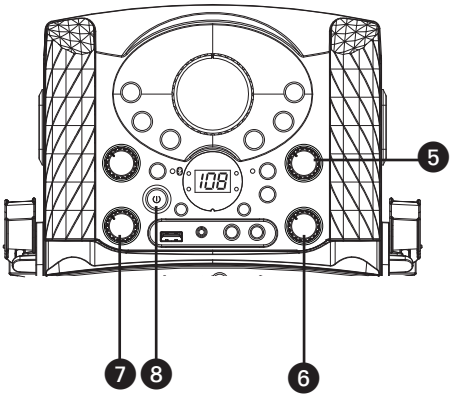

5 Adjust the **MIC VOLUME** control as desired. Increasing this control will increase the volume of both microphones.

6 Rotate the **ECHO** control to add an echo effect to your voice. Rotate towards MAX to increase the echo effect.

7 Adjust the balance between the speakers using the **BALANCE** control.

8 Press the power **ON/OFF** button to turn the unit off.

Operation

Recording Singing to the USB

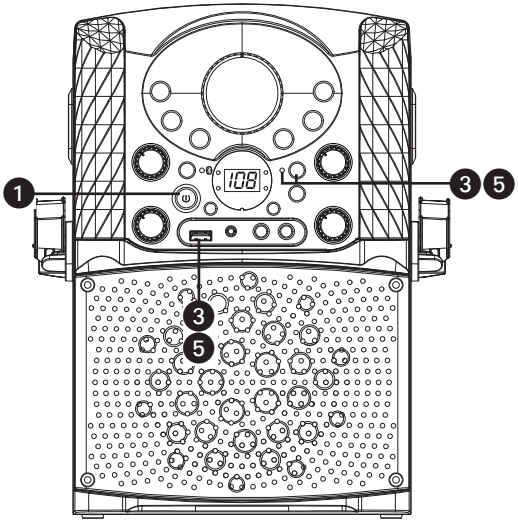

1 Connect the unit as described previously. Press the power **ON/OFF** button to turn the unit on.

RECORD CDG/CD MUSIC TO THE USB

2 Follow the "Playing a CDG" instruction described on page 7 - page 8 to start the CDG/CD music playback.

3 Insert a USB flash drive into the USB port on the unit, press the **REC** button; the **REC** indicator will light up, the song will start over and recording begin. When recording is finished, press the **REC** button again to stop.

RECORD BLUETOOTH MUSIC TO THE USB

4 Follow the "Using a Bluetooth Device" instruction described on page 15 - page 16 to start the Bluetooth music playback.

5 Insert a USB flash drive into the USB port on the unit, press the **REC** button; the **REC** indicator will light up, the song will be recording right the way. When recording is finished, press the **REC** button again to stop.

Operation

Recording Singing to the USB

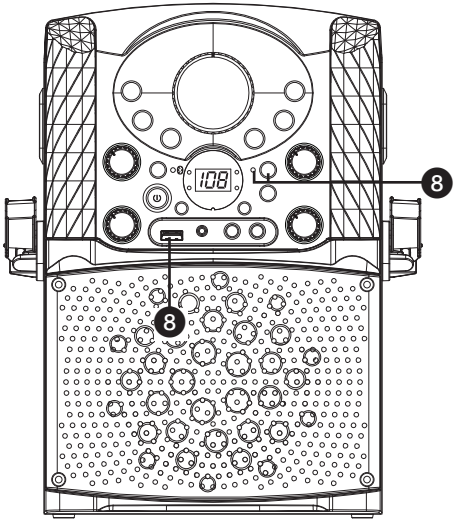

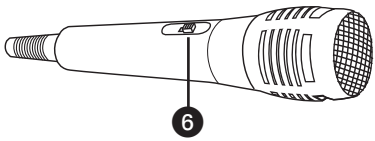

RECORDING YOUR SINGING TO THE USB

6 Connect microphone(s) as shown on page 5. Slide the **ON/OFF** switch on the microphone to the **ON** position.

7 Adjust the **MIC VOLUME** control as desired. Increasing this control will increase the volume of both microphones.

8 Insert a USB flash drive into the USB port on the unit, press the **REC** button; the **REC** indicator will light up, the song will be recording right the way. When recording is finished, press the **REC** button again to stop.

9 All recorded music or recorded singing will be in the folder labelled REC. CDG/CD music or singing recording will be started naming from TRK01. (If CDG music is recorded, the graphic file will also be recorded.) Bluetooth music or singing recording will be started naming from BT and then BT~0.

Note: You cannot record from the USB or Line in, only from a CD, CDG or Bluetooth.

Operation

Where to Download MP3+G Files

Helpful Hints:

The .mp3 and .cdg files are delivered for download in a single, compressed MP3+G.zip file. The MP3+G file cannot be played as a .zip file on a USB flash drive. To play karaoke songs using a USB flash drive, the MP3+G.zip file must be unzipped as follow:

- Connect a USB flash drive to your computer.
- Download the MP3+G file from your Digital Locker and save the .zip file to a folder on your computer.
- Double click the .zip file to open the .zip (you will see the .mp3 .cdg files to USB flash drive.
- Remove (eject) the USB flash drive from your computer.

Turn on the Singing Machine and connect the USB flash drive.

FAQ

- **Where can I get additional help with the file formats?**
  While on the Singing Machine Store's web page, simply click **FILE FORMATS** at the lower left.

To purchase and download karaoke music, please visit http://store.singingmachine.com to access over 12,000 of your favourite karaoke songs. You will need a USB flash drive (not included) to transfer the downloads to this unit. Follow these easy steps:

1. Go to http://store.singmachine.com using your internet browser, and then register.
2. Select and purchase your favorite karaoke music from the Singing Machine Download Store.
3. Download your selected purchase(s) from the Singing Machine Digital Locker to your USB flash drive.
4. Insert the USB flash drive as shown on page 11 and have fun singing!

Note: Your downloaded songs can also be burned to a blank CDR/CDRW.

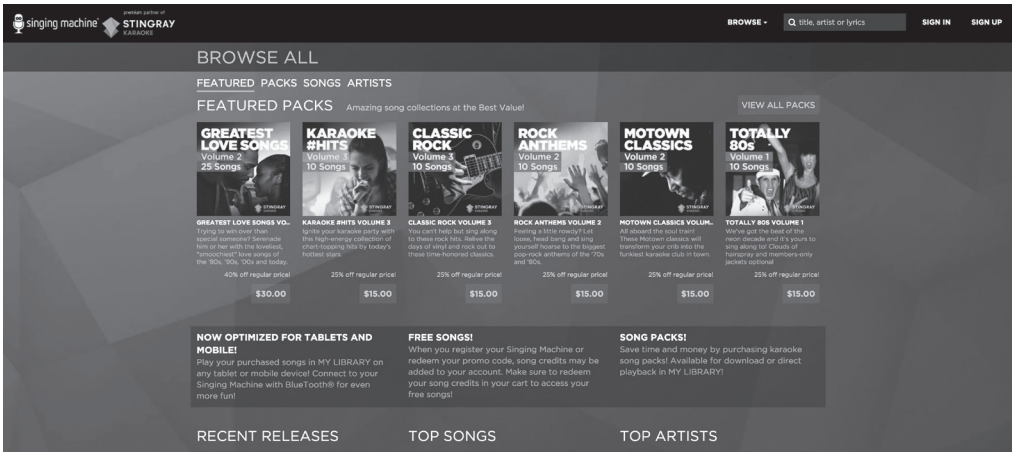

Troubleshooting Guide

Should this unit exhibit a problem, check the following before seeking service:

No Power
- Power is not on; press the power **ON/OFF** button to turn power on.
- Confirm that the AC adapter is connected securely to the back of the unit.
- Connect the unit to a different outlet.

No Sound – General
- Master Volume is set to minimum; raise volume.
- Correct Function was not selected; select using the **CDG/USB/BT** button.
- If using an external device, raise the volume.
- Check if the LINE IN jack is still connected by a cable.

.

No Sound – If connected to a TV
- Volume on the TV is muted or too low.
- Correct source (usually AV) was not selected on the TV's menu.

Lyrics do not appear on the TV screen
- If connected to a TV, Video plug is not connected properly; see page 5.
- If connected to a TV, select the correct source on the TV (usually AV).
- The file/track being played is not a track recording with lyrics. These are the only files that allow you to view the lyrics on the TV screen.
- Nothing will appear on the TV screen when using LINE IN or Bluetooth.

File(s) on USB Jack not playing
- The file is corrupted; replace the file.
- The file is not in a format this unit will play.
- The connected USB device is not supported by the product.

No sound from the microphone
- Make sure the microphone is firmly connected to the MIC 1 or MIC 2 jack.
- Make sure the **ON/OFF** switch on the microphone is set to the ON position.
- Make sure the **MIC VOLUME** setting is not set too low.
- **MASTER VOLUME** is set to minimum; raise volume.
- Adjust The **Echo** control past the mid point on the Singing Machine.

The Bluetooth device cannot be paired or connected with the unit
- You have not activated the Bluetooth function of your device; see page 15 or refer to the Bluetooth device user's manual.
- The system is not in pairing mode; press the **Pair** button to restart pairing.

The Music is not available on the unit after successfully connecting the Bluetooth
- Ensure your Bluetooth device can support the A2DP Bluetooth profile.
- The volume on the external Bluetooth device is set to low or muted; raise as desired.

Specifications

AUDIO

OUTPUT POWER (MAXIMUM) ..... 3.5 Watts (RMS)
OUTPUT IMPEDANCE ..... 3 Ohms

CD PLAYER SECTION

FREQUENCY RESPONSE ..... 100Hz - 20kHz
SIGNAL-TO-NOISE RATIO 50dB
NUMBER OF PROGRAMS ..... 20 Step Random Access Programming
SAMPLING SYSTEM ..... 8 Times Over Sampling

BLUETOOTH

Bluetooth Version ..... V2.1+EDR
Working Distance ..... Up to 30 feet/10 meters measured in open space

USB

Format FAT32
Maximum Compatibility 32GB

AUX IN SECTION ..... 3.5 mm Stereo Headphone Jack
MICROPHONE ..... -74db 600 Ohm Impedance with 6.3 mm Dynamic Microphone

POWER SECTION ..... DC 5.8V 1.5A
POWER CONSUMPTION ..... 8.7 W
DIMENSIONS ..... 8.5 x 7.8 x 12.8 inches / 21.5(L) x 19.8(W) x 32.5(H) cm
WEIGHT ..... 5.0 lbs / 2.2 kgs

Specifications are subject to change without notice.

The Bluetooth® word mark and logos are registered trademarks owned by Bluetooth SIG, Inc. and any use of such marks by The Singing Machine Company is under license. Other trademarks and trade names are those of their respective owners.

Visit Our Website: www.singingmachine.com

The Singing Machine Company, Inc.
4060 E Jurupa Street, Unit B
Ontario, CA 91761-1413 USA

Copyright © 2017 All Rights Reserved.

PRINTED IN CHINA
625BT-1704-ENG01