SGS-CSTC Standards Technical Services Co., Ltd.
Shenzhen Branch

No. 1 Workshop, M-10, Middle section, Science & Technology Park, Nanshan District, Shenzhen, Guangdong, China 518057

Telephone: +86 (0) 755 2601 2053
Fax: +86 (0) 755 2671 0594
Email: ee.shenzhen@sgs.com

FCC Part 95 TEST REPORT

Application No:	SZEM1601000214CR
Applicant:	Calford Technology Ltd.
Product Name:	FM wireless intercom
Model No.(EUT):	NCT688
FCC ID:	2AAYF-NCT688
Standards:	FCC PART 95: 2012
Date of Receipt:	2016-01-13
Date of Test:	2016-01-13 to 2016-02-02
Date of Issue:	2016-03-31
Test Result:	**PASS ***

*In the configuration tested, the EUT detailed in this report complied with the standards specified above.

Authorized Signature:

Jack Zhang
EMC Laboratory Manager

The manufacturer should ensure that all products in series production are in conformity with the product sample detailed in this report. If the product in this report is used in any configuration other than that detailed in the report, the manufacturer must ensure the new system complies with all relevant standards. Any mention of SGS International Electrical Approvals or testing done by SGS International Electrical Approvals in connection with, distribution or use of the product described in this report must be approved by SGS International Electrical Approvals in writing.
The report must not be used by the client to claim product certification, approval, or endorsement by NVLAP, NIST, or any agency of the federal government. All test results in this report can be traceable to National or International Standards.

"This document is issued by the Company subject to its General Conditions of Service printed overleaf, available on request or accessible at www.sgs.com/terms_and_conditions.htm and, for electronic format documents, subject to Terms and Conditions for Electronic Documents at www.sgs.com/terms_e-document.htm. Attention is drawn to the limitation of liability, indemnification and jurisdiction issues defined therein. Any holder of this document is advised that information contained hereon reflects the Company's findings at the time of its intervention only and within the limits of Client's instructions, if any. The Company's sole responsibility is to its Client and this document does not exonerate parties to a transaction from exercising all their rights and obligations under the transaction documents. This document cannot be reproduced except in full, without prior written approval of the Company. Any unauthorized alteration, forgery or falsification of the content or appearance of this document is unlawful and offenders may be prosecuted to the fullest extent of the law. Unless otherwise stated the results shown in this test report refer only to the sample(s) tested and such sample(s) are retained for 90 days only."

2 Version

Revision Record				
Version	**Chapter**	**Date**	**Modifier**	**Remark**
00		2016-03-31		Original

Authorized for issue by:				
Tested By		Benson Wang **(Benson Wang) /Project Engineer**		2016-02-02 **Date**
Prepared By		Joyce Shi **(Joyce Shi) /Clerk**		2016-03-31 **Date**
Checked By		Eric Fu **(Eric Fu) /Reviewer**		2016-03-31 **Date**

"This document is issued by the Company subject to its General Conditions of Service printed overleaf, available on request or accessible at www.sgs.com/terms_and_conditions.htm and, for electronic format documents, subject to Terms and Conditions for Electronic Documents at www.sgs.com/terms_e-document.htm. Attention is drawn to the limitation of liability, indemnification and jurisdiction issues defined therein. Any holder of this document is advised that information contained hereon reflects the Company's findings at the time of its intervention only and within the limits of Client's instructions, if any. The Company's sole responsibility is to its Client and this document does not exonerate parties to a transaction from exercising all their rights and obligations under the transaction documents. This document cannot be reproduced except in full, without prior written approval of the Company. Any unauthorized alteration, forgery or falsification of the content or appearance of this document is unlawful and offenders may be prosecuted to the fullest extent of the law. Unless otherwise stated the results shown in this test report refer only to the sample(s) tested and such sample(s) are retained for 90 days only."

3 Test Summary

Test Item	Test Requirement	Test method	Result
Antenna Requirement	FCC Part 95.647	ANSI/TIA-603-D: 2010	PASS
Conducted Emissions	FCC Part 15.207	ANSI C63.10: 2013	PASS
RF Output Power	FCC Part 2.1046& FCC Part 95.639	ANSI/TIA-603-D: 2010	PASS
Modulation Characteristics	FCC Part 2.1047& FCC Part 95.637	ANSI/TIA-603-D: 2010	PASS
Occupied Bandwidth And Emission Mask	FCC Part 2.1049& FCC Part 95.633, 95.635	ANSI/TIA-603-D: 2010.	PASS
Radiated Spurious Emission	FCC Part 2.1053& FCC Part 95.635	ANSI/TIA-603-D: 2010	PASS
Frequency Stability	FCC Part 2.1055& FCC Part 95.621, 95.626	ANSI/TIA-603-D: 2010	PASS
RF exposure evaluation	FCC Part 2.1093	ANSI/TIA-603-D: 2010	PASS

"This document is issued by the Company subject to its General Conditions of Service printed overleaf, available on request or accessible at www.sgs.com/terms_and_conditions.htm and, for electronic format documents, subject to Terms and Conditions for Electronic Documents at www.sgs.com/terms_e-document.htm. Attention is drawn to the limitation of liability, indemnification and jurisdiction issues defined therein. Any holder of this document is advised that information contained hereon reflects the Company's findings at the time of its intervention only and within the limits of Client's instructions, if any. The Company's sole responsibility is to its Client and this document does not exonerate parties to a transaction from exercising all their rights and obligations under the transaction documents. This document cannot be reproduced except in full, without prior written approval of the Company. Any unauthorized alteration, forgery or falsification of the content or appearance of this document is unlawful and offenders may be prosecuted to the fullest extent of the law. Unless otherwise stated the results shown in this test report refer only to the sample(s) tested and such sample(s) are retained for 90 days only."

4 Contents

Page

1 COVER PAGE 1
2 VERSION 2
3 TEST SUMMARY 3
4 CONTENTS 4
5 GENERAL INFORMATION 5
5.1 CLIENT INFORMATION 5
5.2 GENERAL DESCRIPTION OF EUT 5
5.3 TECHNICAL SPECIFICATIONS: 5
5.4 ACCESSORIES OF PRODUCT: 6
5.5 SUPPORT EQUIPMENTS FOR TESTING 6
5.6 DETAILS OF TEST MODE 6
5.7 TEST CHANNEL: 6
5.8 TEST LOCATION 7
5.9 TEST FACILITY 7
5.10 MEASUREMENT UNCERTAINTY 8
5.11 ENVIRONMENTAL CONDITIONS 8
6 EQUIPMENT LIST 9
7 TEST RESULTS 12
7.1 ANTENNA REQUIREMENT 12
7.2 CONDUCTED EMISSIONS 13
7.3 RF OUTPUT POWER 17
7.4 MODULATION CHARACTERISTICS 20
7.5 OCCUPIED BANDWIDTH AND EMISSION MASK 25
7.6 SPURIOUS EMISSION 31
7.7 FREQUENCY STABILITY 34
8 TEST SETUP PHOTOGRAPHES 36
8.1 CONDUCTED EMISSIONS: 36
8.2 RADIATED EMISSION 36
8.3 RADIATED SPURIOUS EMISSION 37
8.4 RF CONDUCTED 37
9 EUT CONSTRUCTIONAL DETAILS 37

"This document is issued by the Company subject to its General Conditions of Service printed overleaf, available on request or accessible at www.sgs.com/terms_and_conditions.htm and, for electronic format documents, subject to Terms and Conditions for Electronic Documents at www.sgs.com/terms_e-document.htm. Attention is drawn to the limitation of liability, indemnification and jurisdiction issues defined therein. Any holder of this document is advised that information contained hereon reflects the Company's findings at the time of its intervention only and within the limits of Client's instructions, if any. The Company's sole responsibility is to its Client and this document does not exonerate parties to a transaction from exercising all their rights and obligations under the transaction documents. This document cannot be reproduced except in full, without prior written approval of the Company. Any unauthorized alteration, forgery or falsification of the content or appearance of this document is unlawful and offenders may be prosecuted to the fullest extent of the law. Unless otherwise stated the results shown in this test report refer only to the sample(s) tested and such sample(s) are retained for 90 days only."

5 General Information

5.1 Client Information

Applicant:	Calford Technology Ltd.
Address of Applicant:	Flat E, 4/flr. Wing Hin factory bldg., 31-33 Ng Fong St, San Po Kong, Kln., Hong Kong

5.2 General Description of EUT

Product Name	FM wireless intercom
Model No:	NCT688
Product Description:	Fixed production

5.3 Technical Specifications:

Operation Frequency:	462.5625MHz ~ 462.6375 MHz (FRS 1~3 channel)		
Modulation Technique:	FM		
Emission Type	F3E		
Channel Information:	Channel	Frequency (MHz)	Description
	1	462.5625	FRS
	2	462.6125	FRS
	3	462.6375	FRS
Antenna Type	Spiral Antenna		
Antenna Gain	1.0 dBi		

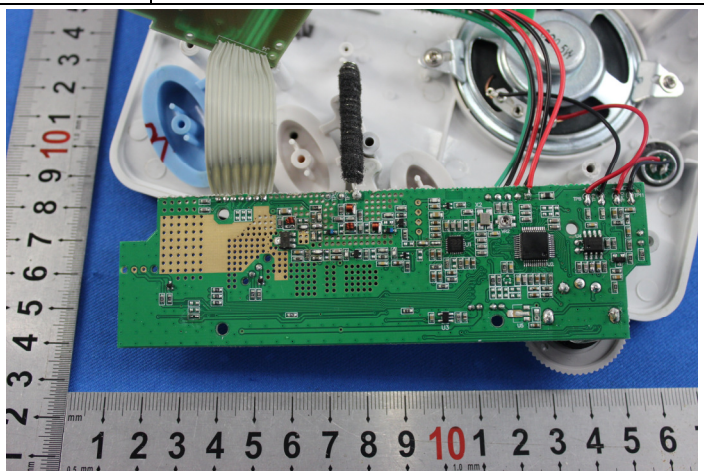

"This document is issued by the Company subject to its General Conditions of Service printed overleaf, available on request or accessible at www.sgs.com/terms_and_conditions.htm and, for electronic format documents, subject to Terms and Conditions for Electronic Documents at www.sgs.com/terms_e-document.htm. Attention is drawn to the limitation of liability, indemnification and jurisdiction issues defined therein. Any holder of this document is advised that information contained hereon reflects the Company's findings at the time of its intervention only and within the limits of Client's instructions, if any. The Company's sole responsibility is to its Client and this document does not exonerate parties to a transaction from exercising all their rights and obligations under the transaction documents. This document cannot be reproduced except in full, without prior written approval of the Company. Any unauthorized alteration, forgery or falsification of the content or appearance of this document is unlawful and offenders may be prosecuted to the fullest extent of the law. Unless otherwise stated the results shown in this test report refer only to the sample(s) tested and such sample(s) are retained for 90 days only."

5.4 Accessories of Product:

Adapter:	Model No.:	JOD-S-050080A5
	Rated Input:	AC 100V-240V 50/60Hz 0.2A
	Rated Output:	DC 5.0V 800mA

5.5 Support equipments for Testing

The EUT has been tested independently.

5.6 Details of Test Mode

Test Mode	Description of Test Mode
Engineering mode:	Control EUT work in continuous transmitter and receiver mode.

5.7 Test Channel:

FRS	
Channel	**Frequency**
2	462.6125MHz

"This document is issued by the Company subject to its General Conditions of Service printed overleaf, available on request or accessible at www.sgs.com/terms_and_conditions.htm and, for electronic format documents, subject to Terms and Conditions for Electronic Documents at www.sgs.com/terms_e-document.htm. Attention is drawn to the limitation of liability, indemnification and jurisdiction issues defined therein. Any holder of this document is advised that information contained hereon reflects the Company's findings at the time of its intervention only and within the limits of Client's instructions, if any. The Company's sole responsibility is to its Client and this document does not exonerate parties to a transaction from exercising all their rights and obligations under the transaction documents. This document cannot be reproduced except in full, without prior written approval of the Company. Any unauthorized alteration, forgery or falsification of the content or appearance of this document is unlawful and offenders may be prosecuted to the fullest extent of the law. Unless otherwise stated the results shown in this test report refer only to the sample(s) tested and such sample(s) are retained for 90 days only."

5.8 Test Location

All tests were performed at:

SGS-CSTC Standards Technical Services Co., Ltd., Shenzhen Branch E&E Lab,
No. 1 Workshop, M-10, Middle Section, Science & Technology Park, Shenzhen, Guangdong, China. 518057.
Tel: +86 755 2601 2053 Fax: +86 755 2671 0594
No tests were sub-contracted.

5.9 Test Facility

The test facility is recognized, certified, or accredited by the following organizations:

• **CNAS (No. CNAS L2929)**

CNAS has accredited SGS-CSTC Standards Technical Services Co., Ltd. Shenzhen Branch EMC Lab to ISO/IEC 17025:2005 General Requirements for the Competence of Testing and Calibration Laboratories (CNAS-CL01 Accreditation Criteria for the Competence of Testing and Calibration Laboratories) for the competence in the field of testing.

• **A2LA (Certificate No. 3816.01)**

SGS-CSTC Standards Technical Services Co., Ltd., Shenzhen EMC Laboratory is accredited by the American Association for Laboratory Accreditation(A2LA). Certificate No. 3816.01.

• **VCCI**

The 10m Semi-anechoic chamber and Shielded Room of SGS-CSTC Standards Technical Services Co., Ltd. have been registered in accordance with the Regulations for Voluntary Control Measures with Registration No.: G-823, R-4188, T-1153 and C-2383 respectively.

• **FCC – Registration No.: 556682**

SGS-CSTC Standards Technical Services Co., Ltd., Shenzhen EMC Laboratory has been registered and fully described in a report filed with the (FCC) Federal Communications Commission. The acceptance letter from the FCC is maintained in our files. Registration No.: 556682.

• **Industry Canada (IC)**

The 3m Semi-anechoic chambers and the 10m Semi-anechoic chambers of SGS-CSTC Standards Technical Services Co., Ltd. Shenzhen Branch EMC Lab have been registered by Certification and Engineering Bureau of Industry Canada for radio equipment testing with Registration No.: 4620C-2, 4620C-3.

"This document is issued by the Company subject to its General Conditions of Service printed overleaf, available on request or accessible at www.sgs.com/terms_and_conditions.htm and, for electronic format documents, subject to Terms and Conditions for Electronic Documents at www.sgs.com/terms_e-document.htm. Attention is drawn to the limitation of liability, indemnification and jurisdiction issues defined therein. Any holder of this document is advised that information contained hereon reflects the Company's findings at the time of its intervention only and within the limits of Client's instructions, if any. The Company's sole responsibility is to its Client and this document does not exonerate parties to a transaction from exercising all their rights and obligations under the transaction documents. This document cannot be reproduced except in full, without prior written approval of the Company. Any unauthorized alteration, forgery or falsification of the content or appearance of this document is unlawful and offenders may be prosecuted to the fullest extent of the law. Unless otherwise stated the results shown in this test report refer only to the sample(s) tested and such sample(s) are retained for 90 days only."

5.10 Measurement Uncertainty

No.	Parameter	Measurement Uncertainty
1	Radio Frequency	< ±1 x 10^{-5}
2	Total RF power, conducted	< ±1.5 dB
3	RF power density, conducted	< ±3 dB
4	Spurious emissions, conducted	< ±3 dB
5	All emissions, radiated	< ±6 dB (30MHz – 1GHz) < ±6 dB (above 1GHz)
6	Temperature	< ±1°C
7	Humidity	< ±5 %
8	DC and low frequency voltages	< ±3 %
9	Conduction Emission	3.0dB(150kHz to 30MHz)

5.11 Environmental Conditions

Items	Required (IEC 68-1)	Actual
Temperature (°C)	15-35	22-24
Humidity (%RH)	25-75	51-58
Barometric Pressure (kPa)	86-106	96-103.5

"This document is issued by the Company subject to its General Conditions of Service printed overleaf, available on request or accessible at www.sgs.com/terms_and_conditions.htm and, for electronic format documents, subject to Terms and Conditions for Electronic Documents at www.sgs.com/terms_e-document.htm. Attention is drawn to the limitation of liability, indemnification and jurisdiction issues defined therein. Any holder of this document is advised that information contained hereon reflects the Company's findings at the time of its intervention only and within the limits of Client's instructions, if any. The Company's sole responsibility is to its Client and this document does not exonerate parties to a transaction from exercising all their rights and obligations under the transaction documents. This document cannot be reproduced except in full, without prior written approval of the Company. Any unauthorized alteration, forgery or falsification of the content or appearance of this document is unlawful and offenders may be prosecuted to the fullest extent of the law. Unless otherwise stated the results shown in this test report refer only to the sample(s) tested and such sample(s) are retained for 90 days only."

6 Equipment List

Conducted Emission						
Item	**Test Equipment**	**Manufacturer**	**Model No.**	**Inventory No.**	**Cal. date (yyyy-mm-dd)**	**Cal.Due date (yyyy-mm-dd)**
1	Shielding Room	ZhongYu Electron	GB-88	SEL0042	2015-05-13	2016-05-13
2	LISN	Rohde & Schwarz	ENV216	SEL0152	2015-10-09	2016-10-09
3	LISN	ETS-LINDGREN	3816/2	SEL0021	2015-05-13	2016-05-13
4	8 Line ISN	Fischer Custom Communications Inc.	FCC-TLISN-T8-02	SEL0162	2015-08-30	2016-08-30
5	4 Line ISN	Fischer Custom Communications Inc.	FCC-TLISN-T4-02	SEL0163	2015-08-30	2016-08-30
6	2 Line ISN	Fischer Custom Communications Inc.	FCC-TLISN-T2-02	SEL0164	2015-08-30	2016-08-30
7	EMI Test Receiver	Rohde & Schwarz	ESCI	SEL0022	2015-05-13	2016-05-13
8	Coaxial Cable	SGS	N/A	SEL0025	2015-05-13	2016-05-13
9	DC Power Supply	Zhao Xin	RXN-305D	SEL0117	2015-10-09	2016-10-09
10	Humidity/ Temperature Indicator	Shanhai Qixiang	ZJ1-2B	SEL0103	2015-10-24	2016-10-24
11	Barometer	Chang Chun	DYM3	SEL0088	2015-05-13	2016-05-13

"This document is issued by the Company subject to its General Conditions of Service printed overleaf, available on request or accessible at www.sgs.com/terms_and_conditions.htm and, for electronic format documents, subject to Terms and Conditions for Electronic Documents at www.sgs.com/terms_e-document.htm. Attention is drawn to the limitation of liability, indemnification and jurisdiction issues defined therein. Any holder of this document is advised that information contained hereon reflects the Company's findings at the time of its intervention only and within the limits of Client's instructions, if any. The Company's sole responsibility is to its Client and this document does not exonerate parties to a transaction from exercising all their rights and obligations under the transaction documents. This document cannot be reproduced except in full, without prior written approval of the Company. Any unauthorized alteration, forgery or falsification of the content or appearance of this document is unlawful and offenders may be prosecuted to the fullest extent of the law. Unless otherwise stated the results shown in this test report refer only to the sample(s) tested and such sample(s) are retained for 90 days only."

RE in Chamber						
Item	**Test Equipment**	**Manufacturer**	**Model No.**	**Inventory No.**	**Cal. date (yyyy-mm-dd)**	**Cal.Due date (yyyy-mm-dd)**
1	3m Semi-Anechoic Chamber	ETS-LINDGREN	N/A	SEL0017	2015-05-13	2016-05-13
2	EMI Test Receiver	Agilent Technologies	N9038A	SEL0312	2015-09-16	2016-09-16
3	EMI Test software	AUDIX	E3	SEL0050	N/A	N/A
4	BiConiLog Antenna (26-3000MHz)	ETS-LINDGREN	3142C	SEL0015	2014-11-01	2017-11-01
5	Double-ridged horn (1-18GHz)	ETS-LINDGREN	3117	SEL0006	2015-10-17	2016-10-17
6	Horn Antenna (18-26GHz)	ETS-LINDGREN	3160	SEL0076	2014-11-24	2017-11-24
7	Pre-amplifier (0.1-1300MHz)	Agilent Technologies	8447D	SEL0053	2015-05-13	2016-05-13
8	Pre-Amplifier (0.1-26.5GHz)	Compliance Directions Systems Inc.	PAP-0126	SEL0168	2015-10-17	2016-10-17
9	Coaxial cable	SGS	N/A	SEL0027	2015-05-13	2016-05-13
10	Coaxial cable	SGS	N/A	SEL0189	2015-05-13	2016-05-13
11	Coaxial cable	SGS	N/A	SEL0121	2015-05-13	2016-05-13
12	Coaxial cable	SGS	N/A	SEL0178	2015-05-13	2016-05-13
13	Band filter	Amindeon	82346	SEL0094	2015-05-13	2016-05-13
14	Barometer	Chang Chun	DYM3	SEL0088	2015-05-13	2016-05-13
15	DC Power Supply	Zhao Xin	RXN-305D	SEL0117	2015-10-09	2016-10-09
16	Humidity/ Temperature Indicator	Shanhai Qixiang	ZJ1-2B	SEL0103	2015-10-24	2016-10-24
17	Signal Generator (10M-27GHz)	Rohde & Schwarz	SMR27	SEL0067	2015-05-13	2016-05-13
18	Loop Antenna	Beijing Daze	ZN30401	SEL0203	2015-05-13	2016-05-13

"This document is issued by the Company subject to its General Conditions of Service printed overleaf, available on request or accessible at www.sgs.com/terms_and_conditions.htm and, for electronic format documents, subject to Terms and Conditions for Electronic Documents at www.sgs.com/terms_e-document.htm. Attention is drawn to the limitation of liability, indemnification and jurisdiction issues defined therein. Any holder of this document is advised that information contained hereon reflects the Company's findings at the time of its intervention only and within the limits of Client's instructions, if any. The Company's sole responsibility is to its Client and this document does not exonerate parties to a transaction from exercising all their rights and obligations under the transaction documents. This document cannot be reproduced except in full, without prior written approval of the Company. Any unauthorized alteration, forgery or falsification of the content or appearance of this document is unlawful and offenders may be prosecuted to the fullest extent of the law. Unless otherwise stated the results shown in this test report refer only to the sample(s) tested and such sample(s) are retained for 90 days only."

RF connected test						
Item	**Test Equipment**	**Manufacturer**	**Model No.**	**Inventory No.**	**Cal. date (yyyy-mm-dd)**	**Cal.Due date (yyyy-mm-dd)**
1	DC Power Supply	Zhao Xin	RXN-305D	SEL0117	2015-10-09	2016-10-09
2	Humidity/ Temperature Indicator	HYGRO	ZJ1-2B	SEL0033	2015-10-24	2016-10-24
3	Spectrum Analyzer	Rohde & Schwarz	FSP	SEL0154	2015-10-17	2016-10-17
4	Coaxial cable	SGS	N/A	SEL0178	2015-05-13	2016-05-13
5	Coaxial cable	SGS	N/A	SEL0179	2015-05-13	2016-05-13
6	Barometer	ChangChun	DYM3	SEL0088	2015-05-13	2016-05-13
7	Signal Generator	Rohde & Schwarz	SML03	SEL0068	2015-04-25	2016-04-25
8	POWER METER	R & S	NRVS	SEL0144	2015-10-09	2016-10-09
9	Attenuator	Beijin feihang taida	TST-2-6dB	SEL0205	2015-04-25	2016-04-25
10	Audio Analyzer	Rohde & Schwarz	UPL	SEL0093	2015-10-24	2016-10-24

"This document is issued by the Company subject to its General Conditions of Service printed overleaf, available on request or accessible at www.sgs.com/terms_and_conditions.htm and, for electronic format documents, subject to Terms and Conditions for Electronic Documents at www.sgs.com/terms_e-document.htm. Attention is drawn to the limitation of liability, indemnification and jurisdiction issues defined therein. Any holder of this document is advised that information contained hereon reflects the Company's findings at the time of its intervention only and within the limits of Client's instructions, if any. The Company's sole responsibility is to its Client and this document does not exonerate parties to a transaction from exercising all their rights and obligations under the transaction documents. This document cannot be reproduced except in full, without prior written approval of the Company. Any unauthorized alteration, forgery or falsification of the content or appearance of this document is unlawful and offenders may be prosecuted to the fullest extent of the law. Unless otherwise stated the results shown in this test report refer only to the sample(s) tested and such sample(s) are retained for 90 days only."

7 Test Results

7.1 Antenna Requirement

Standard requirement:	47 CFR Part 95 Section 647
Part 95.647 requirement: The antenna of each FRS unit, and the antenna of each R/C station transmitting in the 72-76 MHz band, must be an integral part of the transmitter. The antenna must have no gain (as compared to a half-wave dipole) and must be vertically polarized.	
EUT Antenna:	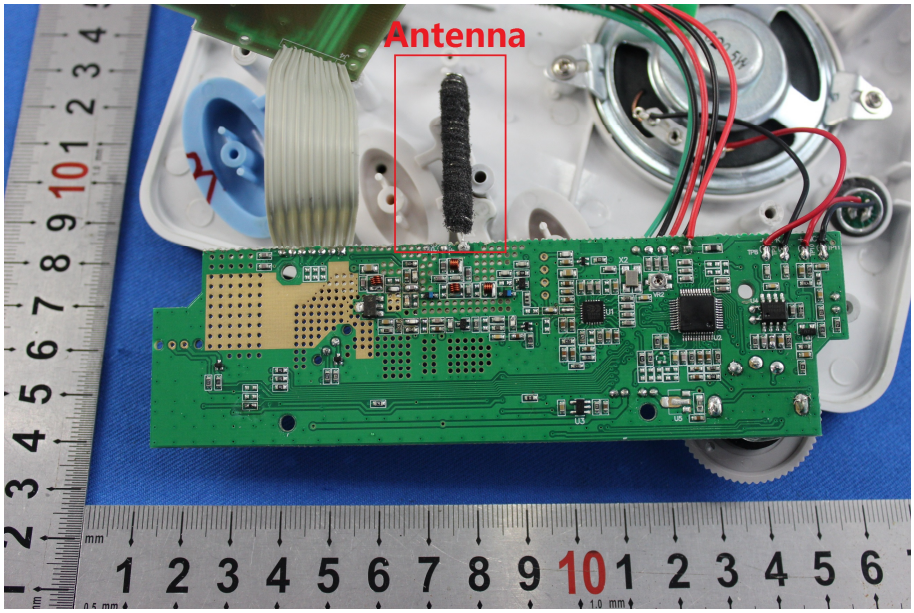
The antenna of each R/C station transmitting in the 72-76 MHz band, it is integrated on the main PCB. The antenna have no gain (as compared to a half-wave dipole) and with vertically polarized.	

"This document is issued by the Company subject to its General Conditions of Service printed overleaf, available on request or accessible at www.sgs.com/terms_and_conditions.htm and, for electronic format documents, subject to Terms and Conditions for Electronic Documents at www.sgs.com/terms_e-document.htm. Attention is drawn to the limitation of liability, indemnification and jurisdiction issues defined therein. Any holder of this document is advised that information contained hereon reflects the Company's findings at the time of its intervention only and within the limits of Client's instructions, if any. The Company's sole responsibility is to its Client and this document does not exonerate parties to a transaction from exercising all their rights and obligations under the transaction documents. This document cannot be reproduced except in full, without prior written approval of the Company. Any unauthorized alteration, forgery or falsification of the content or appearance of this document is unlawful and offenders may be prosecuted to the fullest extent of the law. Unless otherwise stated the results shown in this test report refer only to the sample(s) tested and such sample(s) are retained for 90 days only."

7.2 Conducted Emissions

Test Requirement:	47 CFR Part 15C Section 15.207
Test Method:	ANSI C63.10: 2013
Test Frequency Range:	150kHz to 30MHz
Limit:	

Frequency range (MHz)	Limit (dBuV)	
	Quasi-peak	Average
0.15-0.5	66 to 56*	56 to 46*
0.5-5	56	46
5-30	60	50

* Decreases with the logarithm of the frequency.

Test Procedure:

1) The mains terminal disturbance voltage test was conducted in a shielded room.
2) The EUT was connected to AC power source through a LISN 1 (Line Impedance Stabilization Network) which provides a 50Ω/50μH + 5Ω linear impedance. The power cables of all other units of the EUT were connected to a second LISN 2, which was bonded to the ground reference plane in the same way as the LISN 1 for the unit being measured. A multiple socket outlet strip was used to connect multiple power cables to a single LISN provided the rating of the LISN was not exceeded.
3) The tabletop EUT was placed upon a non-metallic table 0.8m above the ground reference plane. And for floor-standing arrangement, the EUT was placed on the horizontal ground reference plane,
4) The test was performed with a vertical ground reference plane. The rear of the EUT shall be 0.4 m from the vertical ground reference plane. The vertical ground reference plane was bonded to the horizontal ground reference plane. The LISN 1 was placed 0.8 m from the boundary of the unit under test and bonded to a ground reference plane for LISNs mounted on top of the ground reference plane. This distance was between the closest points of the LISN 1 and the EUT. All other units of the EUT and associated equipment was at least 0.8 m from the LISN 2.
5) In order to find the maximum emission, the relative positions of equipment and all of the interface cables must be changed according to ANSI C63.10: 2013 on conducted measurement.

"This document is issued by the Company subject to its General Conditions of Service printed overleaf, available on request or accessible at www.sgs.com/terms_and_conditions.htm and, for electronic format documents, subject to Terms and Conditions for Electronic Documents at www.sgs.com/terms_e-document.htm. Attention is drawn to the limitation of liability, indemnification and jurisdiction issues defined therein. Any holder of this document is advised that information contained hereon reflects the Company's findings at the time of its intervention only and within the limits of Client's instructions, if any. The Company's sole responsibility is to its Client and this document does not exonerate parties to a transaction from exercising all their rights and obligations under the transaction documents. This document cannot be reproduced except in full, without prior written approval of the Company. Any unauthorized alteration, forgery or falsification of the content or appearance of this document is unlawful and offenders may be prosecuted to the fullest extent of the law. Unless otherwise stated the results shown in this test report refer only to the sample(s) tested and such sample(s) are retained for 90 days only."

Test Setup:	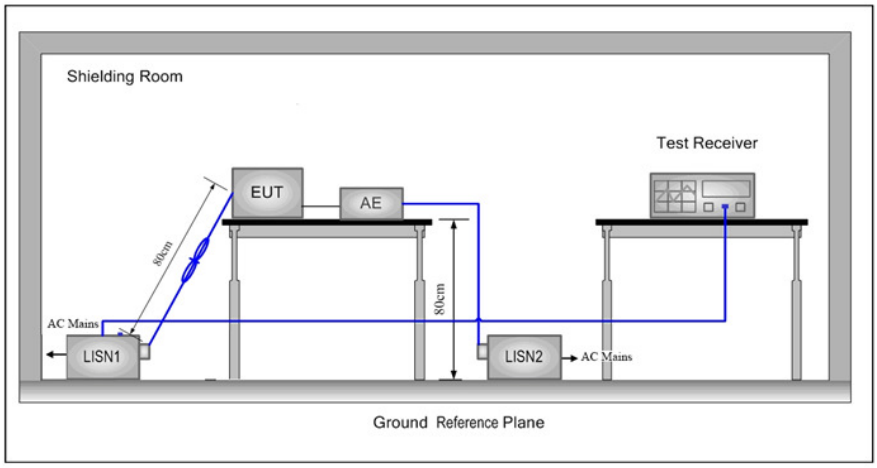
Exploratory Test Mode:	Non-hopping transmitting mode with all kind of modulation and all kind of data type at the lowest, middle, high channel. Transmitting mode.
Final Test Mode:	Through Pre-scan, find the lowest channel is the worst case. Transmitting mode Only the worst case is recorded in the report.
Instruments Used:	Refer to section 6 for details
Test Results:	Pass

Measurement Data

An initial pre-scan was performed on the live and neutral lines with peak detector.
Quasi-Peak and Average measurement were performed at the frequencies with maximized peak emission were detected.

"This document is issued by the Company subject to its General Conditions of Service printed overleaf, available on request or accessible at www.sgs.com/terms_and_conditions.htm and, for electronic format documents, subject to Terms and Conditions for Electronic Documents at www.sgs.com/terms_e-document.htm. Attention is drawn to the limitation of liability, indemnification and jurisdiction issues defined therein. Any holder of this document is advised that information contained hereon reflects the Company's findings at the time of its intervention only and within the limits of Client's instructions, if any. The Company's sole responsibility is to its Client and this document does not exonerate parties to a transaction from exercising all their rights and obligations under the transaction documents. This document cannot be reproduced except in full, without prior written approval of the Company. Any unauthorized alteration, forgery or falsification of the content or appearance of this document is unlawful and offenders may be prosecuted to the fullest extent of the law. Unless otherwise stated the results shown in this test report refer only to the sample(s) tested and such sample(s) are retained for 90 days only."

Live line:

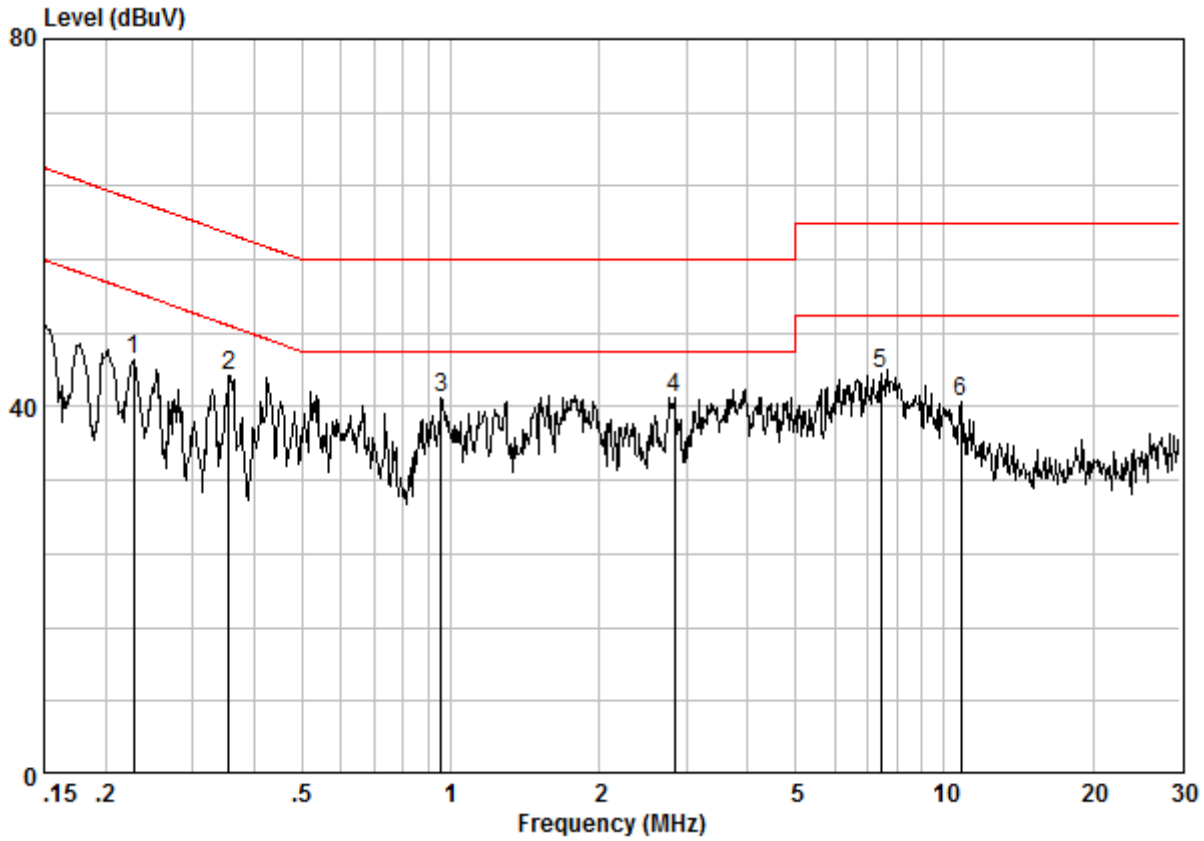

Site : Shielding Room
Condition : CE LINE
Job No. : 0214CR
Test Mode : Charge+TX

	Freq	Cable Loss	LISN Factor	Read Level	Level	Limit Line	Over Limit	Remark
	MHz	dB	dB	dBuV	dBuV	dBuV	dB	
1	0.22797	0.02	9.60	35.42	45.04	52.52	-7.48	Peak
2	0.35576	0.01	9.59	33.69	43.29	48.83	-5.54	Peak
3	0.95819	0.02	9.63	31.24	40.89	46.00	-5.11	Peak
4	2.839	0.02	9.62	31.32	40.96	46.00	-5.04	Peak
5	7.446	0.01	9.68	33.97	43.66	50.00	-6.34	Peak
6	10.790	0.01	9.72	30.75	40.48	50.00	-9.52	Peak

"This document is issued by the Company subject to its General Conditions of Service printed overleaf, available on request or accessible at www.sgs.com/terms_and_conditions.htm and, for electronic format documents, subject to Terms and Conditions for Electronic Documents at www.sgs.com/terms_e-document.htm. Attention is drawn to the limitation of liability, indemnification and jurisdiction issues defined therein. Any holder of this document is advised that information contained hereon reflects the Company's findings at the time of its intervention only and within the limits of Client's instructions, if any. The Company's sole responsibility is to its Client and this document does not exonerate parties to a transaction from exercising all their rights and obligations under the transaction documents. This document cannot be reproduced except in full, without prior written approval of the Company. Any unauthorized alteration, forgery or falsification of the content or appearance of this document is unlawful and offenders may be prosecuted to the fullest extent of the law. Unless otherwise stated the results shown in this test report refer only to the sample(s) tested and such sample(s) are retained for 90 days only."

Neutral line:

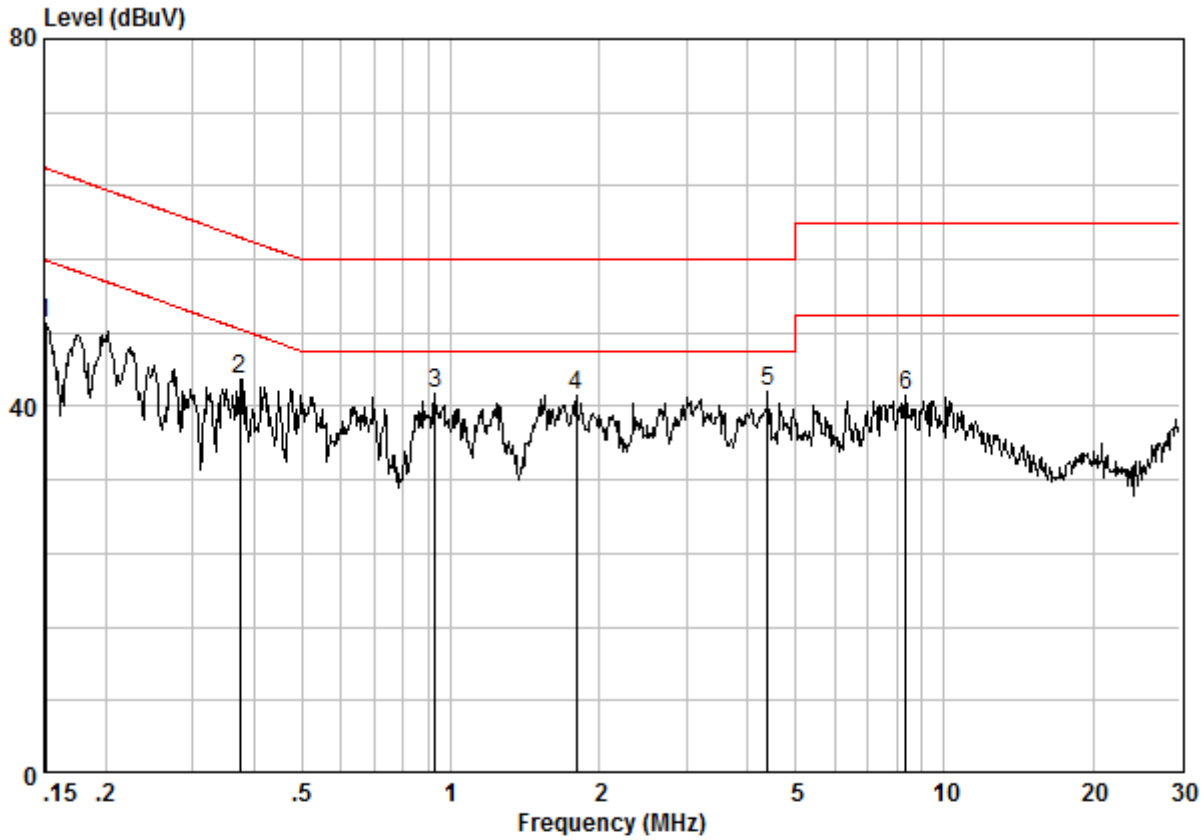

Site : Shielding Room
Condition : CE NEUTRAL
Job No. : 0214CR
Test Mode : Charge+TX

		Freq	Cable Loss	LISN Factor	Read Level	Level	Limit Line	Over Limit	Remark
		MHz	dB	dB	dBuV	dBuV	dBuV	dB	
1		0.15080	0.02	9.62	39.30	48.94	55.96	-7.02	Peak
2		0.37314	0.01	9.62	33.32	42.95	48.43	-5.49	Peak
3		0.92821	0.02	9.64	31.74	41.40	46.00	-4.60	Peak
4		1.800	0.02	9.65	31.51	41.18	46.00	-4.82	Peak
5	@	4.384	0.01	9.70	31.85	41.56	46.00	-4.44	Peak
6		8.367	0.01	9.77	31.35	41.13	50.00	-8.87	Peak

Notes:

1. The following Quasi-Peak and Average measurements were performed on the EUT:

2. Final Test Level =Receiver Reading + LISN Factor + Cable Loss.

"This document is issued by the Company subject to its General Conditions of Service printed overleaf, available on request or accessible at www.sgs.com/terms_and_conditions.htm and, for electronic format documents, subject to Terms and Conditions for Electronic Documents at www.sgs.com/terms_e-document.htm. Attention is drawn to the limitation of liability, indemnification and jurisdiction issues defined therein. Any holder of this document is advised that information contained hereon reflects the Company's findings at the time of its intervention only and within the limits of Client's instructions, if any. The Company's sole responsibility is to its Client and this document does not exonerate parties to a transaction from exercising all their rights and obligations under the transaction documents. This document cannot be reproduced except in full, without prior written approval of the Company. Any unauthorized alteration, forgery or falsification of the content or appearance of this document is unlawful and offenders may be prosecuted to the fullest extent of the law. Unless otherwise stated the results shown in this test report refer only to the sample(s) tested and such sample(s) are retained for 90 days only."

7.3 RF Output Power

Test standard: FCC Part 95 Section 95.639

Test Method: Based on TIA603:2010.

Measurement Distance: 3m (Semi-Anechoic Chamber)

Test instrumentation resolution bandwidth 100 kHz (30 MHz - 1000 MHz)

Requirements:

Per FCC §2.1046 and §95.639(d): No FRS unit, under any condition of modulation, shall exceed 0.500 W effective radiated power (ERP).

Per FCC §2.1046 and §95.639(a): No GMRS transmitter, under any condition of modulation, shall exceed 50 W Carrier power (average TP during one un-modulated RF cycle) when transmitting emission type A1D, F1D, G1D, A3E, F3E or G3E.

Test Procedure:

The technique used to find the output power of the transmitter was the antenna substitution method. The following test procedure was followed:

1). The EUT was powered ON and placed on a 0.8m high table in the chamber. The antenna of the transmitter was extended to its maximum length.

2). The disturbance of the transmitter was maximized on the test receiver display by raising and lowering from 1m to 4m the receive antenna and by rotating through 360° the turntable. After the fundamental emission was maximized, a field strength measurement was made.

3). Steps 1) and 2) were performed with the EUT and the receive antenna in both vertical and horizontal polarization.

4). The transmitter was then removed and replaced with another antenna. The center of the antenna was approximately at the same location as the center of the transmitter.

5). A signal at the disturbance was fed to the substitution antenna by means of a non-radiating cable. With both the substitution and the receive antennas horizontally polarized, the receive antenna was raised and lowered to obtain a maximum reading at the test receiver. The level of the signal generator was adjusted until the measured field strength level in step 2) is obtained for this set of conditions.

6). The output power into the substitution antenna was then measured.

7). Steps 5) and 6) were repeated with both antennas polarized.

8). Calculate power in dBm by the following formula:

ERP (dBm) = Pg(dBm) – cable loss (dB) + antenna gain (dBd)

Where:

Pg is the generator output power into the substitution antenna.

"This document is issued by the Company subject to its General Conditions of Service printed overleaf, available on request or accessible at www.sgs.com/terms_and_conditions.htm and, for electronic format documents, subject to Terms and Conditions for Electronic Documents at www.sgs.com/terms_e-document.htm. Attention is drawn to the limitation of liability, indemnification and jurisdiction issues defined therein. Any holder of this document is advised that information contained hereon reflects the Company's findings at the time of its intervention only and within the limits of Client's instructions, if any. The Company's sole responsibility is to its Client and this document does not exonerate parties to a transaction from exercising all their rights and obligations under the transaction documents. This document cannot be reproduced except in full, without prior written approval of the Company. Any unauthorized alteration, forgery or falsification of the content or appearance of this document is unlawful and offenders may be prosecuted to the fullest extent of the law. Unless otherwise stated the results shown in this test report refer only to the sample(s) tested and such sample(s) are retained for 90 days only."

Test Configuration:

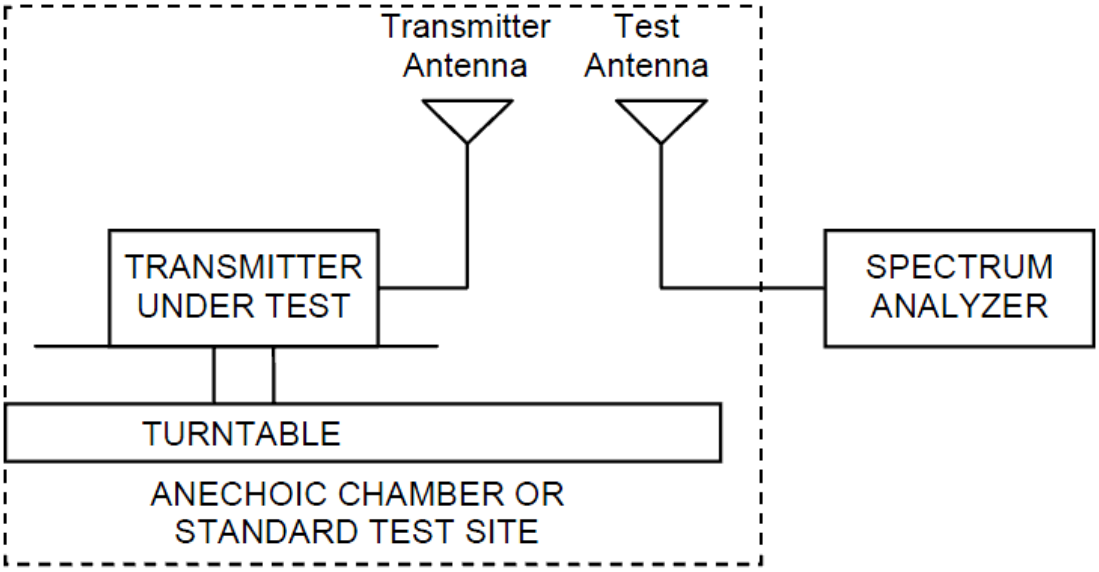

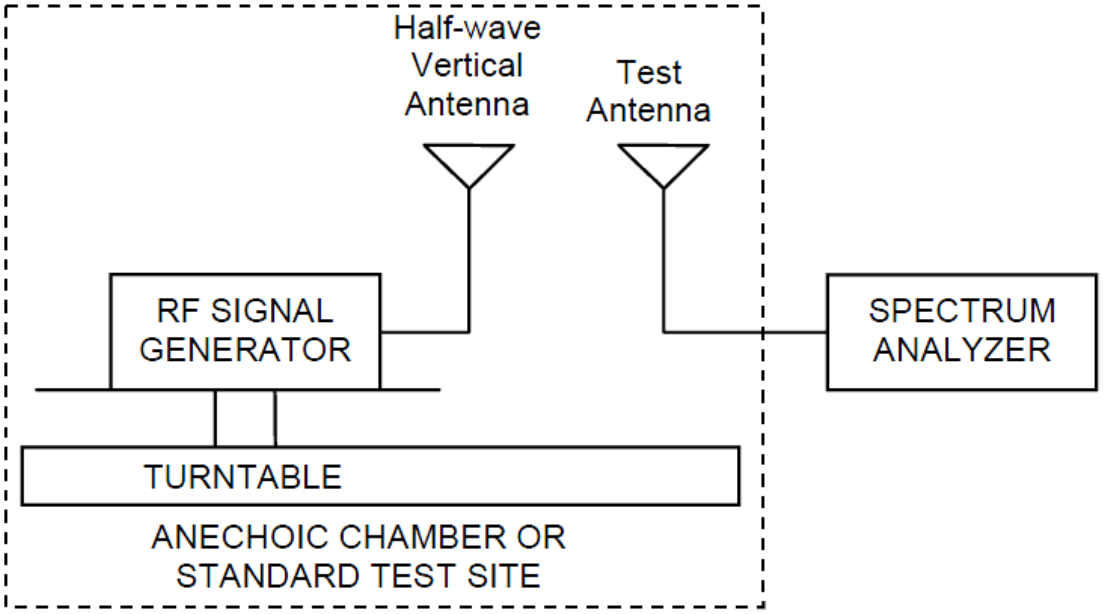

"This document is issued by the Company subject to its General Conditions of Service printed overleaf, available on request or accessible at www.sgs.com/terms_and_conditions.htm and, for electronic format documents, subject to Terms and Conditions for Electronic Documents at www.sgs.com/terms_e-document.htm. Attention is drawn to the limitation of liability, indemnification and jurisdiction issues defined therein. Any holder of this document is advised that information contained hereon reflects the Company's findings at the time of its intervention only and within the limits of Client's instructions, if any. The Company's sole responsibility is to its Client and this document does not exonerate parties to a transaction from exercising all their rights and obligations under the transaction documents. This document cannot be reproduced except in full, without prior written approval of the Company. Any unauthorized alteration, forgery or falsification of the content or appearance of this document is unlawful and offenders may be prosecuted to the fullest extent of the law. Unless otherwise stated the results shown in this test report refer only to the sample(s) tested and such sample(s) are retained for 90 days only."

Test result:

Effective Radiated Power of Transmitter (ERP)

Freq. (MHz)	Meas. Level (dBm)	Substitution Antenna Type	SGP (dBm)	Substitution Gain(dBd)	Cable Loss (dB)	Substitution Level(ERP) / dBm	Substitution Level(ERP) / W	Limit (W)	Result
462.5625	26.89	Dipole	32.33	-4.90	0.6	26.83	0.48	0.5	Pass
462.6125	26.81	Dipole	32.33	-5.02	0.6	26.71	0.47	0.5	Pass
462.6375	26.70	Dipole	32.23	-5.00	0.6	26.63	0.46	0.5	Pass

Note:

a: For getting the ERP (Efficient Radiated Power) in substitution method, the following formula should be taken to calculate it,

ERP [dBm] = SGP [dBm] – Cable Loss [dB] + Gain [dBd]

b: SGP=Signal Generator Level

c: RBW > emission bandwidth, VBW > 3 x RBW.

Detector: RMS

"This document is issued by the Company subject to its General Conditions of Service printed overleaf, available on request or accessible at www.sgs.com/terms_and_conditions.htm and, for electronic format documents, subject to Terms and Conditions for Electronic Documents at www.sgs.com/terms_e-document.htm. Attention is drawn to the limitation of liability, indemnification and jurisdiction issues defined therein. Any holder of this document is advised that information contained hereon reflects the Company's findings at the time of its intervention only and within the limits of Client's instructions, if any. The Company's sole responsibility is to its Client and this document does not exonerate parties to a transaction from exercising all their rights and obligations under the transaction documents. This document cannot be reproduced except in full, without prior written approval of the Company. Any unauthorized alteration, forgery or falsification of the content or appearance of this document is unlawful and offenders may be prosecuted to the fullest extent of the law. Unless otherwise stated the results shown in this test report refer only to the sample(s) tested and such sample(s) are retained for 90 days only."

7.4 Modulation Characteristics

Test standard: FCC Part 95 Section 95.637

Test Method: Based on TIA603:2010.

Requirements:

Per FCC §2.1047 and §95.637(a): A GMRS transmitter that transmits emission type F3E must not exceed a peak frequency deviation of plus or minus 5 kHz. A FRS unit that transmits emission type F3E must not exceed a peak frequency deviation of plus or minus 2.5 kHz, and the audio frequency response must not exceed 3.125 kHz.

Each GMRS transmitter, except a mobile station transmitter with a power output of 2.5 W or less, must automatically prevent a greater than normal audio level from causing over-modulation. The transmitter also must include audio frequency low pass filtering, unless it complies with the applicable paragraphs of § 95.631 (without filtering.) The filter must be between the modulation limiter and the modulated stage of the transmitter. At any frequency (f in kHz) between 3 and 20 kHz, the filter must have an attenuation of at least 60 log 10 (f/3) dB greater than the attenuation at 1 kHz. Above 20 kHz, it must have an attenuation of at least 50 dB greater than the attenuation at 1 kHz.

Test Procedure:

a. Frequency deviation

(1). Configure the EUT as shown in figure 1, adjust the audio input for 60% of rated system deviation at 1 KHz using this level as a reference (0dB) and vary the input level from –20 to +20dB. Record the frequency deviation obtained as a function of the input level.

(2). Repeat step (1) with input frequency changing to 500, 1000, 2500 and 3125Hz in sequence.

b. Modulation Frequency Response

(1). Configure the EUT as shown in figure 1.

(2). Adjust the audio signal generator frequency to the sound pressure level 107dBSPL at the microphone of the EUT.

(3). Vary the Audio frequency from 100 Hz to 5 KHz and record the frequency deviation.

(4). The peak frequency deviation must not exceed ±2.5KHz.

c. Audio Low Pass Filter Response

(1) Connect the equipment in figure 2.

(2) Connect the audio frequency generator as close as possible the input of the post limiter low pass filter within the transmitter under test.

(3) Connect the audio spectrum analyzer to the output of the post limiter low pass filter within the transmitter under test.

(4) Apply a 1000 Hz tone from the audio frequency generator and adjust the level per manufacturer's specifications.

(5) Record the dB level of the 1000 Hz spectral line on the audio spectrum analyzer as LEV1.

(6) Set the audio frequency generator to the desired test frequency between 3000 Hz and the upper low pass filter limit.

(7) Record audio spectrum analyzer levels, at the test frequency in step (6).

(8) Record the dB level on the audio spectrum analyzer as LEV2. Method of Measurement for transmitters.

"This document is issued by the Company subject to its General Conditions of Service printed overleaf, available on request or accessible at www.sgs.com/terms_and_conditions.htm and, for electronic format documents, subject to Terms and Conditions for Electronic Documents at www.sgs.com/terms_e-document.htm. Attention is drawn to the limitation of liability, indemnification and jurisdiction issues defined therein. Any holder of this document is advised that information contained hereon reflects the Company's findings at the time of its intervention only and within the limits of Client's instructions, if any. The Company's sole responsibility is to its Client and this document does not exonerate parties to a transaction from exercising all their rights and obligations under the transaction documents. This document cannot be reproduced except in full, without prior written approval of the Company. Any unauthorized alteration, forgery or falsification of the content or appearance of this document is unlawful and offenders may be prosecuted to the fullest extent of the law. Unless otherwise stated the results shown in this test report refer only to the sample(s) tested and such sample(s) are retained for 90 days only."

Test Configuration:

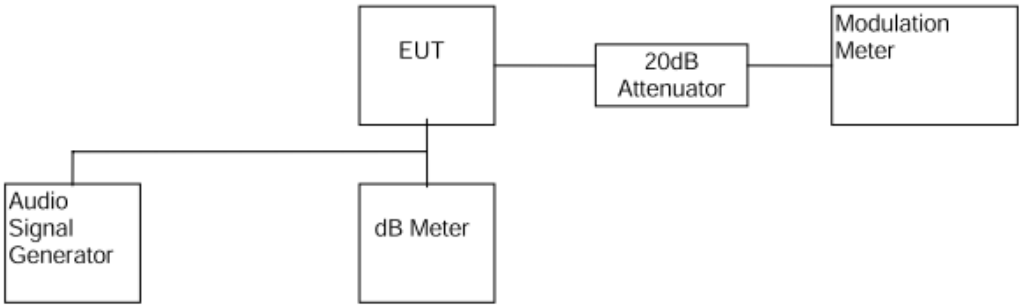

Figure 1

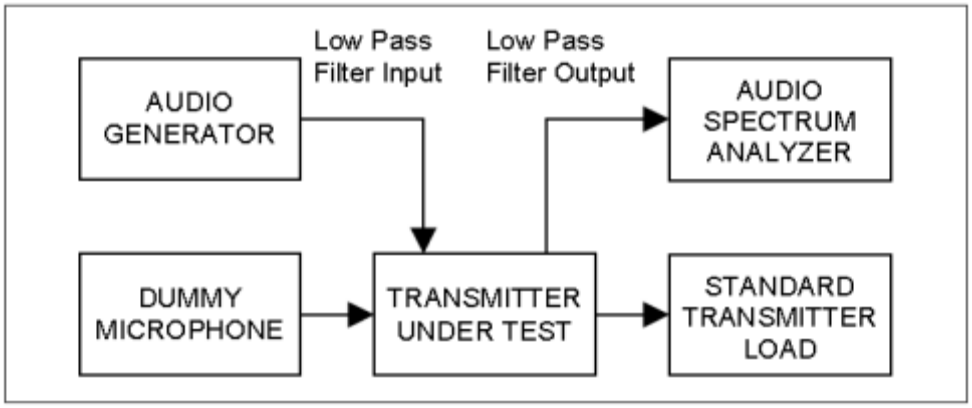

Figure 2

"This document is issued by the Company subject to its General Conditions of Service printed overleaf, available on request or accessible at www.sgs.com/terms_and_conditions.htm and, for electronic format documents, subject to Terms and Conditions for Electronic Documents at www.sgs.com/terms_e-document.htm. Attention is drawn to the limitation of liability, indemnification and jurisdiction issues defined therein. Any holder of this document is advised that information contained hereon reflects the Company's findings at the time of its intervention only and within the limits of Client's instructions, if any. The Company's sole responsibility is to its Client and this document does not exonerate parties to a transaction from exercising all their rights and obligations under the transaction documents. This document cannot be reproduced except in full, without prior written approval of the Company. Any unauthorized alteration, forgery or falsification of the content or appearance of this document is unlawful and offenders may be prosecuted to the fullest extent of the law. Unless otherwise stated the results shown in this test report refer only to the sample(s) tested and such sample(s) are retained for 90 days only."

Test result:

a. Frequency deviation:

Channel 2: 462.6125MHz FRS					
Modulation Input(dB)	Peak Frequency Deviation(KHz) at 500Hz	Peak Frequency Deviation(KHz) at 1000Hz	Peak Frequency Deviation(KHz) at 2500Hz	Peak Frequency Deviation(KHz) at 3125Hz	Limit (KHz)
-20	0.56	0.77	0.45	0.34	2.50
-15	0.67	0.86	0.46	0.39	2.50
-10	0.82	0.67	0.54	0.41	2.50
-5	0.70	0.94	0.42	0.44	2.50
0	0.86	0.78	0.32	0.36	2.50
5	0.97	1.23	0.41	0.56	2.50
10	1.45	1.47	0.41	0.47	2.50
15	1.34	1.53	0.33	0.34	2.50
20	1.22	1.37	0.29	0.55	2.50

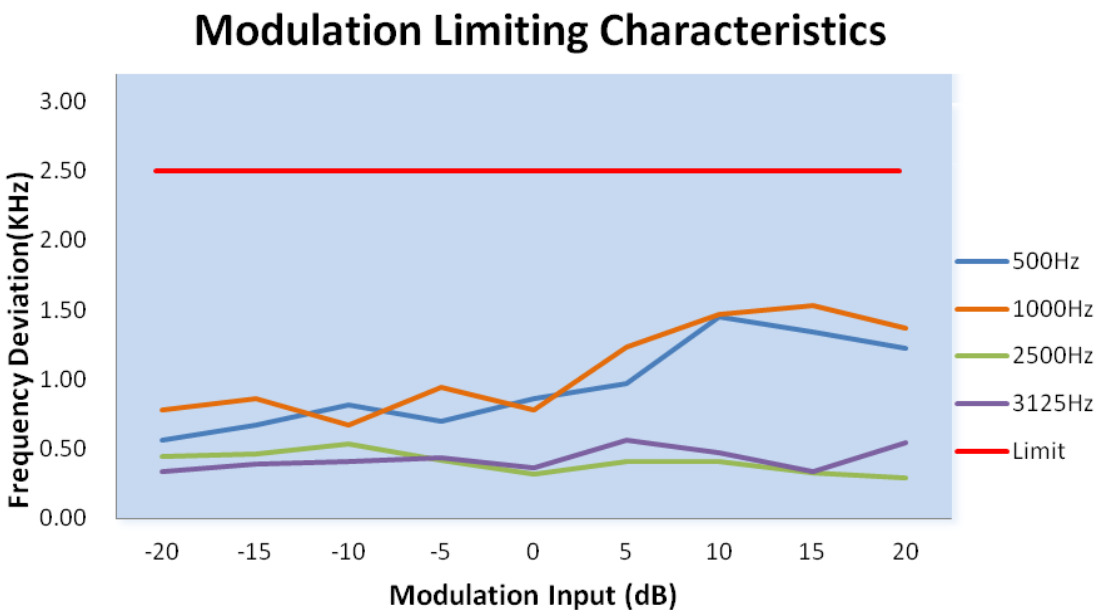

"This document is issued by the Company subject to its General Conditions of Service printed overleaf, available on request or accessible at www.sgs.com/terms_and_conditions.htm and, for electronic format documents, subject to Terms and Conditions for Electronic Documents at www.sgs.com/terms_e-document.htm. Attention is drawn to the limitation of liability, indemnification and jurisdiction issues defined therein. Any holder of this document is advised that information contained hereon reflects the Company's findings at the time of its intervention only and within the limits of Client's instructions, if any. The Company's sole responsibility is to its Client and this document does not exonerate parties to a transaction from exercising all their rights and obligations under the transaction documents. This document cannot be reproduced except in full, without prior written approval of the Company. Any unauthorized alteration, forgery or falsification of the content or appearance of this document is unlawful and offenders may be prosecuted to the fullest extent of the law. Unless otherwise stated the results shown in this test report refer only to the sample(s) tested and such sample(s) are retained for 90 days only."

b. Audio Frequency Response

Channel 2 for FRS

Modulation Frequency(Hz)	Peak Modulation Deviation(KHz)	Limit (KHz)
100	0.30	3.125
200	0.75	3.125
300	0.83	3.125
400	1.13	3.125
500	1.26	3.125
600	1.31	3.125
700	1.30	3.125
800	1.35	3.125
900	1.26	3.125
1000	1.33	3.125
1250	1.14	3.125
1500	1.16	3.125
1750	1.28	3.125
2000	1.28	3.125
2250	1.36	3.125
2500	1.41	3.125
2750	1.22	3.125
3000	1.08	3.125
3125	0.90	3.125
3250	0.57	3.125
3500	0.25	3.125
4000	0.22	3.125
5000	0.25	3.125

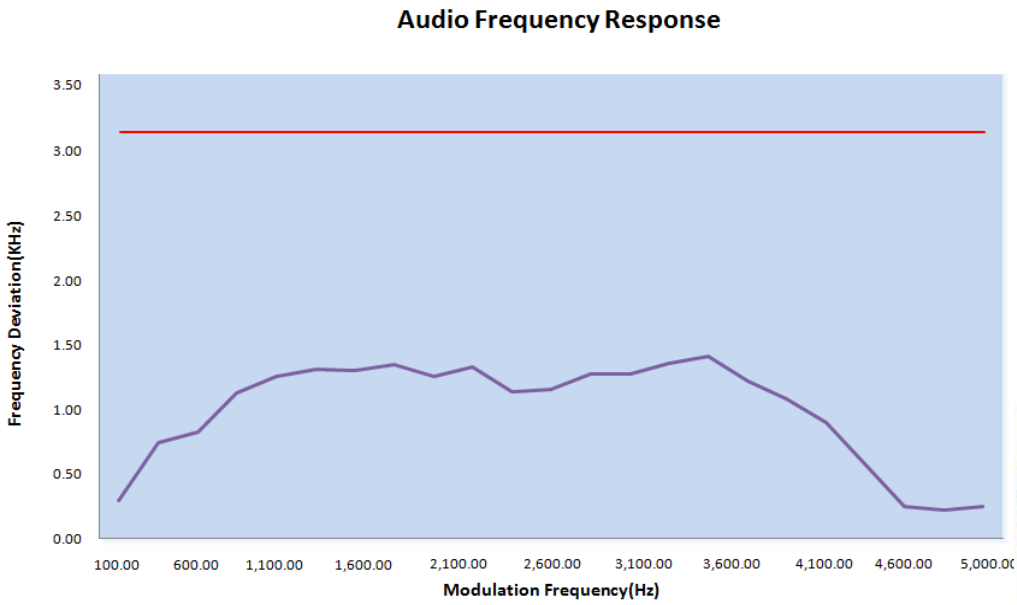

"This document is issued by the Company subject to its General Conditions of Service printed overleaf, available on request or accessible at www.sgs.com/terms_and_conditions.htm and, for electronic format documents, subject to Terms and Conditions for Electronic Documents at www.sgs.com/terms_e-document.htm. Attention is drawn to the limitation of liability, indemnification and jurisdiction issues defined therein. Any holder of this document is advised that information contained hereon reflects the Company's findings at the time of its intervention only and within the limits of Client's instructions, if any. The Company's sole responsibility is to its Client and this document does not exonerate parties to a transaction from exercising all their rights and obligations under the transaction documents. This document cannot be reproduced except in full, without prior written approval of the Company. Any unauthorized alteration, forgery or falsification of the content or appearance of this document is unlawful and offenders may be prosecuted to the fullest extent of the law. Unless otherwise stated the results shown in this test report refer only to the sample(s) tested and such sample(s) are retained for 90 days only."

c. Audio Low Pass Filter Frequency Response

Channel 4 for GMRS

Frequency(KHz)	Response (dB)	Limit (KHz)
1	0.00	0.00
2	0.00	0.00
3	-5.46	0.00
4	-10.96	-8.52
5	-15.68	-13.64
6	-19.84	-18.75
7	-24.19	-22.16
8	-28.70	-25.57
9	-31.26	-28.98
10	-34.43	-32.39
20	-55.07	-49.43
30	-55.07	-50.00
40	-55.07	-50.00
50	-55.07	-50.00
60	-55.07	-50.00
70	-55.07	-50.00
80	-55.07	-50.00
90	-55.07	-50.00
100	-55.07	-50.00

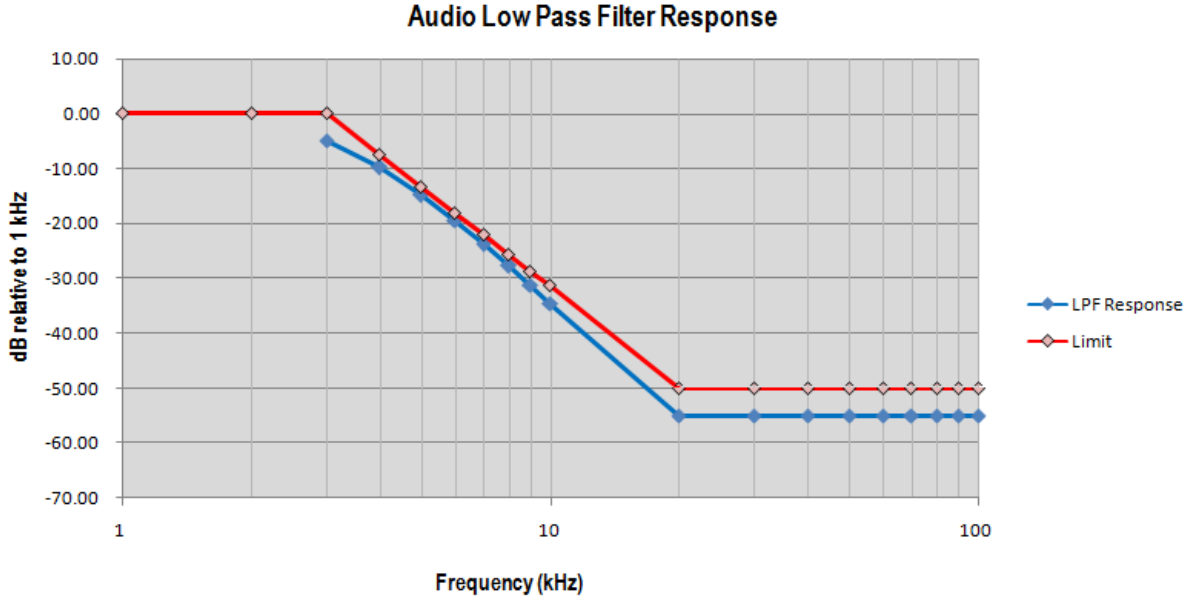

"This document is issued by the Company subject to its General Conditions of Service printed overleaf, available on request or accessible at www.sgs.com/terms_and_conditions.htm and, for electronic format documents, subject to Terms and Conditions for Electronic Documents at www.sgs.com/terms_e-document.htm. Attention is drawn to the limitation of liability, indemnification and jurisdiction issues defined therein. Any holder of this document is advised that information contained hereon reflects the Company's findings at the time of its intervention only and within the limits of Client's instructions, if any. The Company's sole responsibility is to its Client and this document does not exonerate parties to a transaction from exercising all their rights and obligations under the transaction documents. This document cannot be reproduced except in full, without prior written approval of the Company. Any unauthorized alteration, forgery or falsification of the content or appearance of this document is unlawful and offenders may be prosecuted to the fullest extent of the law. Unless otherwise stated the results shown in this test report refer only to the sample(s) tested and such sample(s) are retained for 90 days only."

7.5 Occupied Bandwidth And Emission Mask

Test Requirement: FCC Part 95 Section 95.633

Test Method: Based on TIA603:2010.

Requirements:

According to §95.633(c), the authorized bandwidth for emission type F3E or F2D transmitted by a FRS unit is 12.5 kHz. The authorized bandwidth for emission type F1D, G1D, F3E or G3E is 20kHz.

The power of each unwanted emission shall be less than TP as specified in the applicable paragraphs listed in the following :

1) At least 25 dB (decibels) on any frequency removed from the center of the authorized bandwidth by more than 50% up to and including 100% of the authorized bandwidth.

2) At least 35 dB on any frequency removed from the center of the authorized bandwidth by more than 100% up to and including 250% of the authorized bandwidth.

3) At least 43 + 10 log 10 (T) dB on any frequency removed from the center of the authorized bandwidth by more than 250%, the calculation formulas and limit result refer Section5.1.5 note 2.

Procedure:

1).The set-up test equipment in the following configuration:

2). The EUT was modulated by 2.5 KHz Sine wave audio signal, The level of the audio signal employed is 16 dB greater than that necessary to produce 50% of rated system deviation. Rated system deviation is 2.5 kHz (12.5 kHz channel spacing).

3).Set SPA Centre Frequency = fundamental frequency, RBW=VBW= 300 Hz, Span =20 KHz.

4).Set SPA Max hold. Mark peak, -20 dB.

Test Configuration:

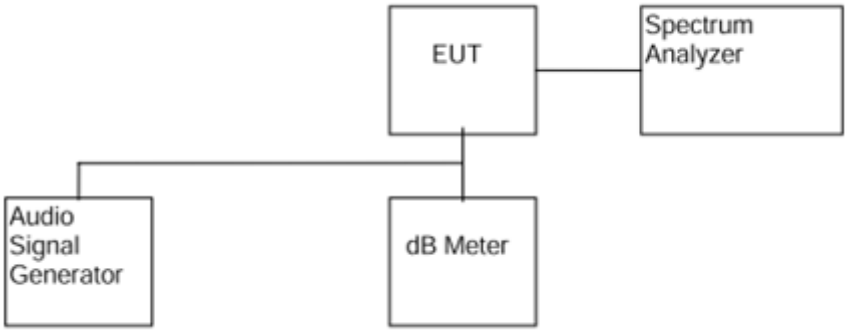

"This document is issued by the Company subject to its General Conditions of Service printed overleaf, available on request or accessible at www.sgs.com/terms_and_conditions.htm and, for electronic format documents, subject to Terms and Conditions for Electronic Documents at www.sgs.com/terms_e-document.htm. Attention is drawn to the limitation of liability, indemnification and jurisdiction issues defined therein. Any holder of this document is advised that information contained hereon reflects the Company's findings at the time of its intervention only and within the limits of Client's instructions, if any. The Company's sole responsibility is to its Client and this document does not exonerate parties to a transaction from exercising all their rights and obligations under the transaction documents. This document cannot be reproduced except in full, without prior written approval of the Company. Any unauthorized alteration, forgery or falsification of the content or appearance of this document is unlawful and offenders may be prosecuted to the fullest extent of the law. Unless otherwise stated the results shown in this test report refer only to the sample(s) tested and such sample(s) are retained for 90 days only."

Test result:

The occupied Bandwidth is measured to be 4.57 KHz for FRS.

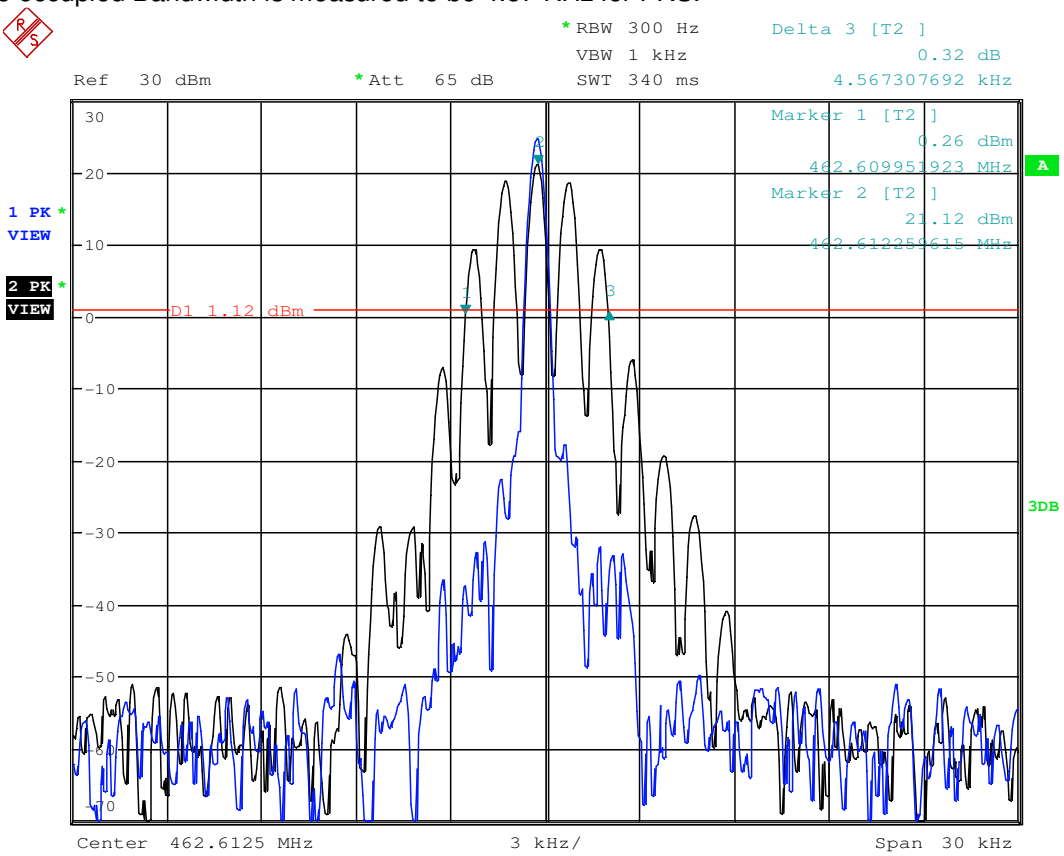

Channel 4 462.6125MHz FRS

The unit does meet the FCC requirements.

"This document is issued by the Company subject to its General Conditions of Service printed overleaf, available on request or accessible at www.sgs.com/terms_and_conditions.htm and, for electronic format documents, subject to Terms and Conditions for Electronic Documents at www.sgs.com/terms_e-document.htm. Attention is drawn to the limitation of liability, indemnification and jurisdiction issues defined therein. Any holder of this document is advised that information contained hereon reflects the Company's findings at the time of its intervention only and within the limits of Client's instructions, if any. The Company's sole responsibility is to its Client and this document does not exonerate parties to a transaction from exercising all their rights and obligations under the transaction documents. This document cannot be reproduced except in full, without prior written approval of the Company. Any unauthorized alteration, forgery or falsification of the content or appearance of this document is unlawful and offenders may be prosecuted to the fullest extent of the law. Unless otherwise stated the results shown in this test report refer only to the sample(s) tested and such sample(s) are retained for 90 days only."

Emission Mask:

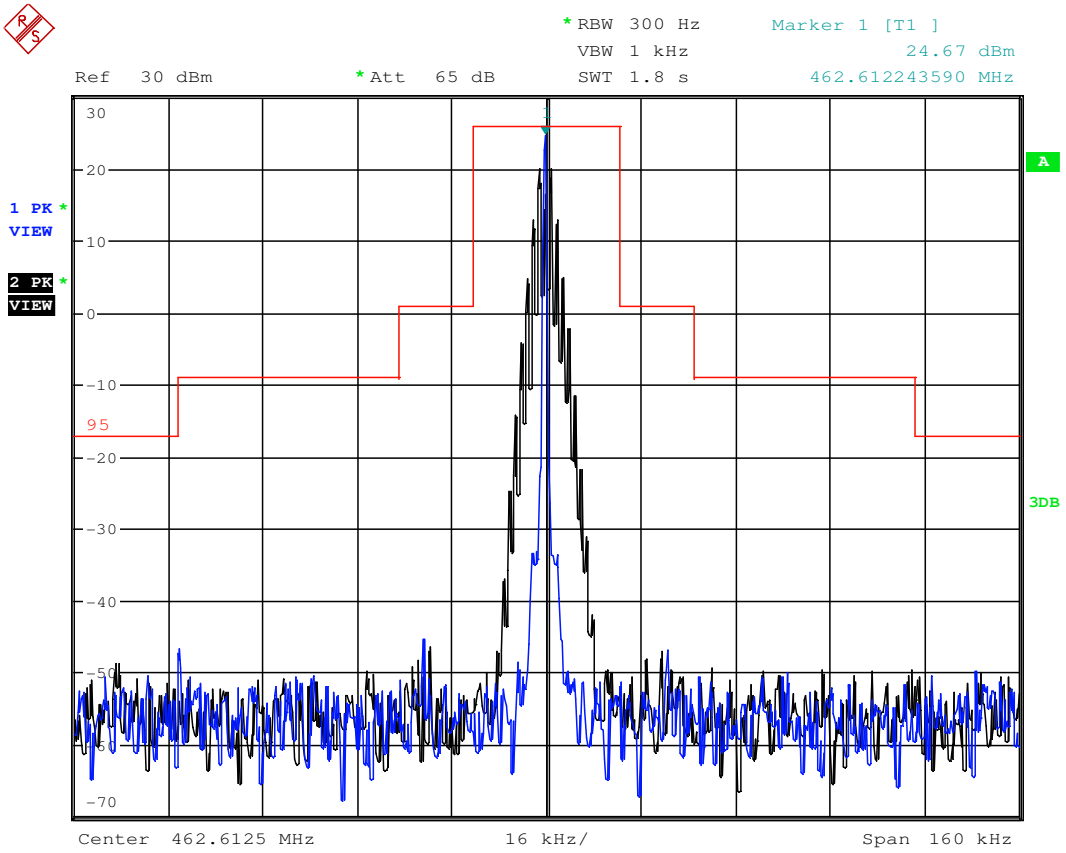

Channel 2: 462.6125MHz FRS

The unit does meet the FCC requirements.

"This document is issued by the Company subject to its General Conditions of Service printed overleaf, available on request or accessible at www.sgs.com/terms_and_conditions.htm and, for electronic format documents, subject to Terms and Conditions for Electronic Documents at www.sgs.com/terms_e-document.htm. Attention is drawn to the limitation of liability, indemnification and jurisdiction issues defined therein. Any holder of this document is advised that information contained hereon reflects the Company's findings at the time of its intervention only and within the limits of Client's instructions, if any. The Company's sole responsibility is to its Client and this document does not exonerate parties to a transaction from exercising all their rights and obligations under the transaction documents. This document cannot be reproduced except in full, without prior written approval of the Company. Any unauthorized alteration, forgery or falsification of the content or appearance of this document is unlawful and offenders may be prosecuted to the fullest extent of the law. Unless otherwise stated the results shown in this test report refer only to the sample(s) tested and such sample(s) are retained for 90 days only."

Conducted Spurious Emissions

Test plot as follows:

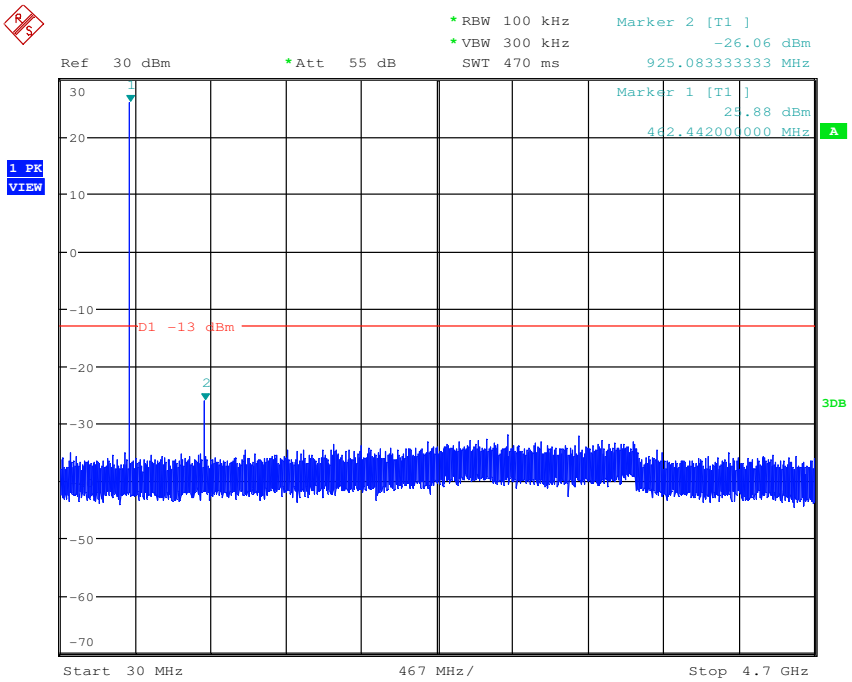

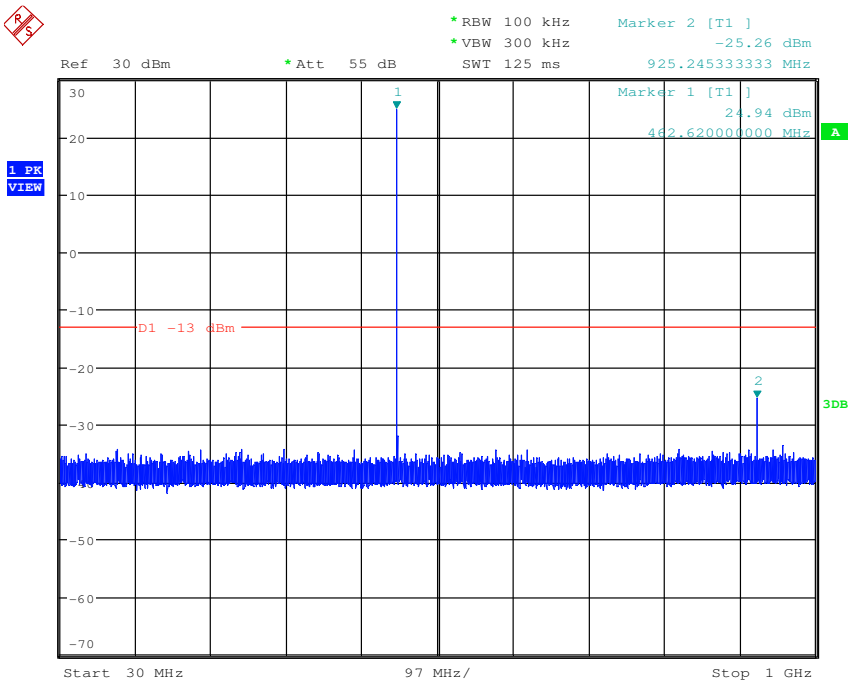

"This document is issued by the Company subject to its General Conditions of Service printed overleaf, available on request or accessible at www.sgs.com/terms_and_conditions.htm and, for electronic format documents, subject to Terms and Conditions for Electronic Documents at www.sgs.com/terms_e-document.htm. Attention is drawn to the limitation of liability, indemnification and jurisdiction issues defined therein. Any holder of this document is advised that information contained hereon reflects the Company's findings at the time of its intervention only and within the limits of Client's instructions, if any. The Company's sole responsibility is to its Client and this document does not exonerate parties to a transaction from exercising all their rights and obligations under the transaction documents. This document cannot be reproduced except in full, without prior written approval of the Company. Any unauthorized alteration, forgery or falsification of the content or appearance of this document is unlawful and offenders may be prosecuted to the fullest extent of the law. Unless otherwise stated the results shown in this test report refer only to the sample(s) tested and such sample(s) are retained for 90 days only."

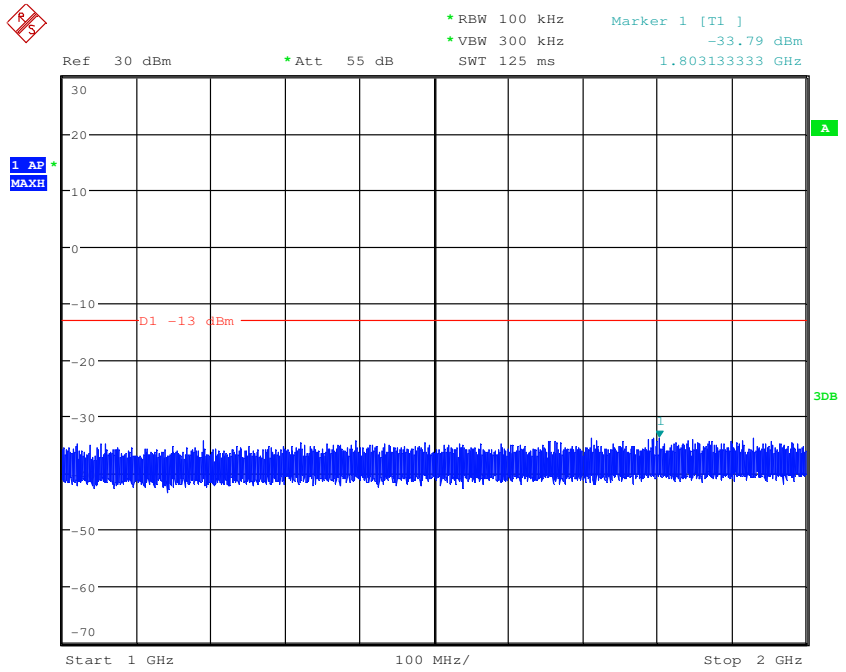

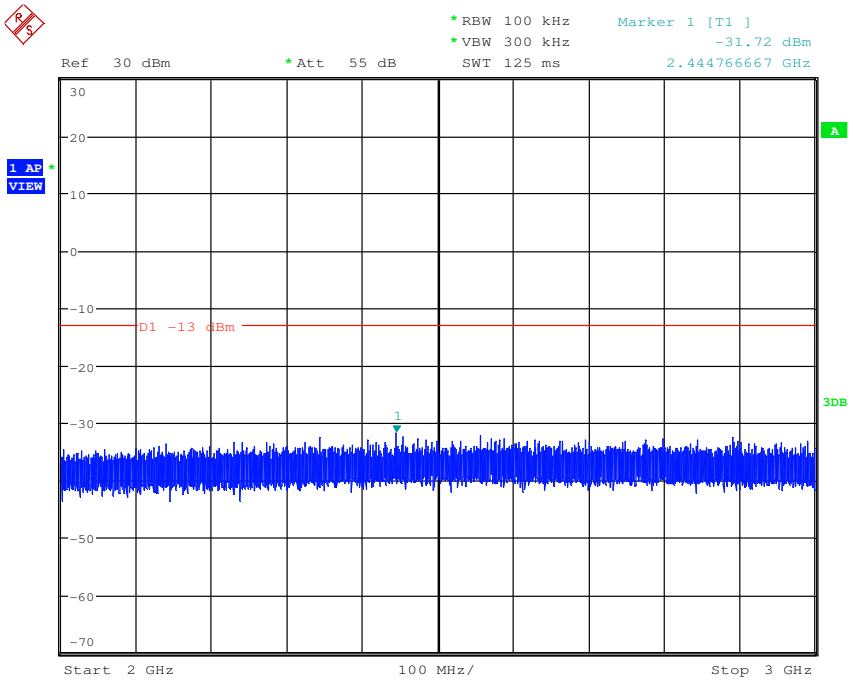

"This document is issued by the Company subject to its General Conditions of Service printed overleaf, available on request or accessible at www.sgs.com/terms_and_conditions.htm and, for electronic format documents, subject to Terms and Conditions for Electronic Documents at www.sgs.com/terms_e-document.htm. Attention is drawn to the limitation of liability, indemnification and jurisdiction issues defined therein. Any holder of this document is advised that information contained hereon reflects the Company's findings at the time of its intervention only and within the limits of Client's instructions, if any. The Company's sole responsibility is to its Client and this document does not exonerate parties to a transaction from exercising all their rights and obligations under the transaction documents. This document cannot be reproduced except in full, without prior written approval of the Company. Any unauthorized alteration, forgery or falsification of the content or appearance of this document is unlawful and offenders may be prosecuted to the fullest extent of the law. Unless otherwise stated the results shown in this test report refer only to the sample(s) tested and such sample(s) are retained for 90 days only."

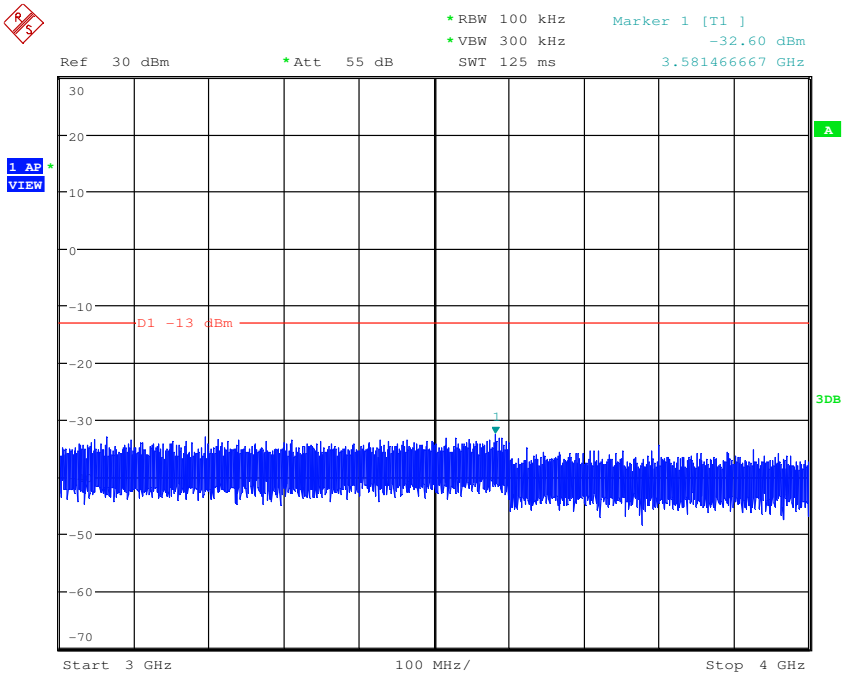

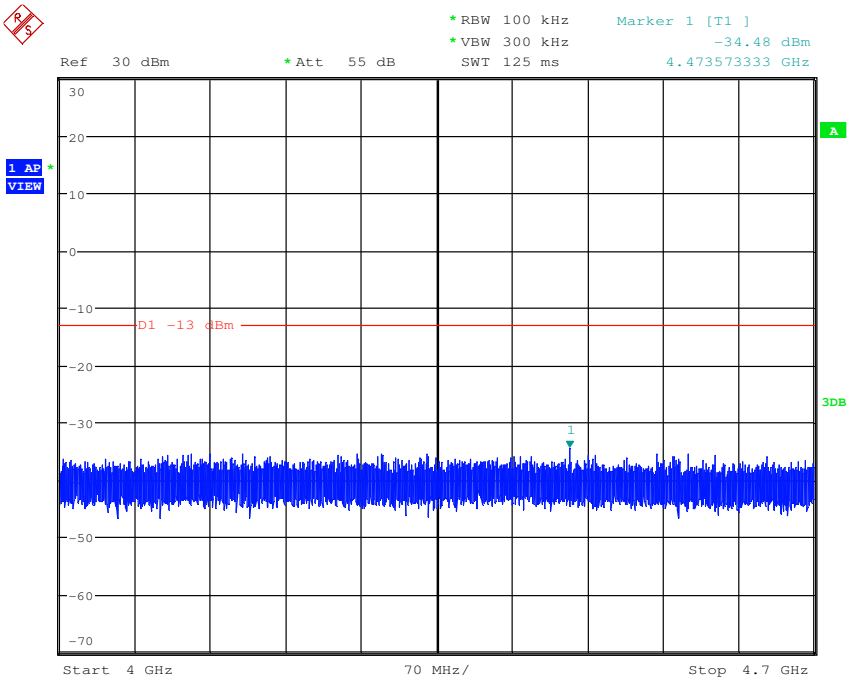

"This document is issued by the Company subject to its General Conditions of Service printed overleaf, available on request or accessible at www.sgs.com/terms_and_conditions.htm and, for electronic format documents, subject to Terms and Conditions for Electronic Documents at www.sgs.com/terms_e-document.htm. Attention is drawn to the limitation of liability, indemnification and jurisdiction issues defined therein. Any holder of this document is advised that information contained hereon reflects the Company's findings at the time of its intervention only and within the limits of Client's instructions, if any. The Company's sole responsibility is to its Client and this document does not exonerate parties to a transaction from exercising all their rights and obligations under the transaction documents. This document cannot be reproduced except in full, without prior written approval of the Company. Any unauthorized alteration, forgery or falsification of the content or appearance of this document is unlawful and offenders may be prosecuted to the fullest extent of the law. Unless otherwise stated the results shown in this test report refer only to the sample(s) tested and such sample(s) are retained for 90 days only."

7.6 Spurious Emission

Test standard:	FCC Part 95 Section 95.635
Test Method:	Based on TIA603:2010.
Measurement Distance:	3m (Semi-Anechoic Chamber) Resolution bandwidth =10 kHz for spurious emissions below 1 GHz, and 1 MHz for spurious emissions above 1GHz. Video Bandwidth = 300 kHz for spurious emissions below 1 GHz, and3 MHz for spurious emissions above 1 GHz.

Requirements:

According to FCC section 95.635(b7), the unwanted emission should be attenuated below TP by at least 43+10log (Transmit Power) dB and it always -13dBm.

Test Procedure:

(1)On a test site, the EUT shall be placed on a turntable and in the position closest to the normal use as declared by the user.
(2)The test antenna shall be oriented initially for vertical polarization located 3m from the EUT to correspond to the transmitter.
(3)The output of the antenna shall be connected to the measuring receiver and either a peak or quasi-peak detector was used for the measurement as indicated on the report. The detector selection is based on how close the emission level was approaching the limit.
(4)The transmitter shall be switched on; if possible, without the modulation and the measurement receiver shall be tuned to the frequency of the transmitter under test.
(5)The test antenna shall be raised and lowered through the specified range of height until the measuring receiver detects a maximum signal level.
(6)The transmitter shall than be rotated through 360°in the horizontal plane, until the maximum signal level is detected by the measuring receiver.
(7)The test antenna shall be raised and lowered again through the specified range of height until the measuring receiver detects a maximum signal level.
(8)The maximum signal level detected by the measuring receiver shall be noted.
(9)The measurement shall be repeated with the test antenna set to horizontal polarization.
(10) Replace the antenna with a proper Antenna (substitution antenna).
(11)The substitution antenna shall be oriented for vertical polarization and, if necessary, the length of the substitution antenna shall be adjusted to correspond to the frequency of transmitting.
(12)The substitution antenna shall be connected to a calibrated signal generator.
(13)If necessary, the input attenuator setting of the measuring receiver shall be adjusted in order to increase the sensitivity of the measuring receiver.
(14)The test antenna shall be raised and lowered through the specified range of the height to ensure that the maximum signal is received.
(15)The input signal to substitution antenna shall be adjusted to the level that produces a level detected by the measuring receiver, that is equal to the level noted while the transmitter radiated power was measured, corrected for the change of input attenuation setting of the measuring receiver.
(16)The input level to the substitution antenna shall be recorded as power level in dBm, corrected for any change of input attenuator setting of the measuring receiver.
(17)The measurement shall be repeated with the test antenna and the substitution antenna oriented for horizontal polarization.

"This document is issued by the Company subject to its General Conditions of Service printed overleaf, available on request or accessible at www.sgs.com/terms_and_conditions.htm and, for electronic format documents, subject to Terms and Conditions for Electronic Documents at www.sgs.com/terms_e-document.htm. Attention is drawn to the limitation of liability, indemnification and jurisdiction issues defined therein. Any holder of this document is advised that information contained hereon reflects the Company's findings at the time of its intervention only and within the limits of Client's instructions, if any. The Company's sole responsibility is to its Client and this document does not exonerate parties to a transaction from exercising all their rights and obligations under the transaction documents. This document cannot be reproduced except in full, without prior written approval of the Company. Any unauthorized alteration, forgery or falsification of the content or appearance of this document is unlawful and offenders may be prosecuted to the fullest extent of the law. Unless otherwise stated the results shown in this test report refer only to the sample(s) tested and such sample(s) are retained for 90 days only."

Test Configuration:

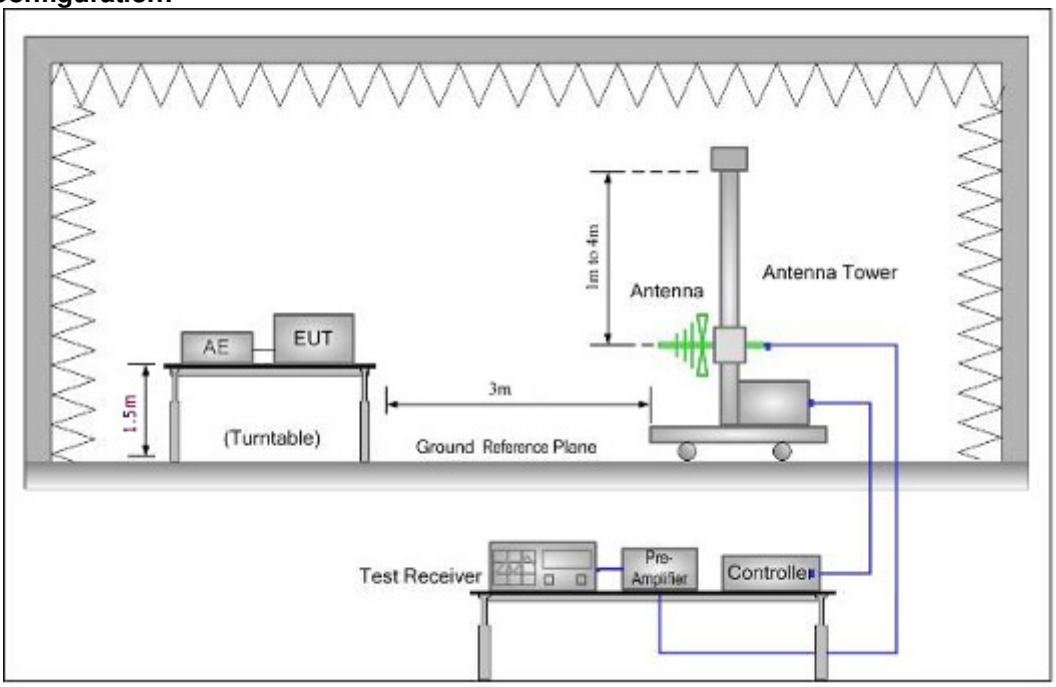

30MHz to 1GHz

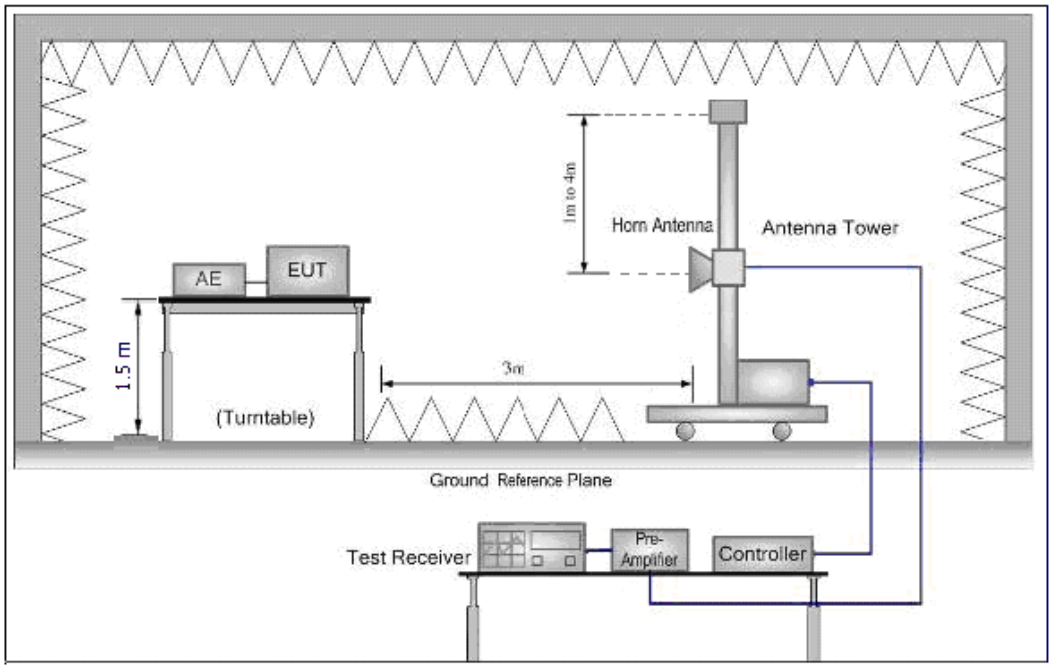

Above 1 GHz

"This document is issued by the Company subject to its General Conditions of Service printed overleaf, available on request or accessible at www.sgs.com/terms_and_conditions.htm and, for electronic format documents, subject to Terms and Conditions for Electronic Documents at www.sgs.com/terms_e-document.htm. Attention is drawn to the limitation of liability, indemnification and jurisdiction issues defined therein. Any holder of this document is advised that information contained hereon reflects the Company's findings at the time of its intervention only and within the limits of Client's instructions, if any. The Company's sole responsibility is to its Client and this document does not exonerate parties to a transaction from exercising all their rights and obligations under the transaction documents. This document cannot be reproduced except in full, without prior written approval of the Company. Any unauthorized alteration, forgery or falsification of the content or appearance of this document is unlawful and offenders may be prosecuted to the fullest extent of the law. Unless otherwise stated the results shown in this test report refer only to the sample(s) tested and such sample(s) are retained for 90 days only."

Test result:

Test mode 1: FRS mode continue transmitting

Channel 2; Frequency= 462.6125MHz;

Frequency MHz	Polarity V/H	Emission level dBm	FCC Part 95 Limit dBm	Margin dB
925.225	V	-17.86	-13.00	-4.86
1387.838	V	-27.96	-13.00	-14.96
1850.450	V	-34.36	-13.00	-21.36
2313.063	V	-35.74	-13.00	-22.74
2775.675	V	-40.03	-13.00	-27.03
925.225	H	-22.90	-13.00	-9.9
1387.838	H	-24.02	-13.00	-11.02
1850.450	H	-35.11	-13.00	-22.11
2313.063	H	-41.46	-13.00	-28.46
2775.675	H	-43.14	-13.00	-30.14

Note: Margin= Spurious Attenuation- limit

"This document is issued by the Company subject to its General Conditions of Service printed overleaf, available on request or accessible at www.sgs.com/terms_and_conditions.htm and, for electronic format documents, subject to Terms and Conditions for Electronic Documents at www.sgs.com/terms_e-document.htm. Attention is drawn to the limitation of liability, indemnification and jurisdiction issues defined therein. Any holder of this document is advised that information contained hereon reflects the Company's findings at the time of its intervention only and within the limits of Client's instructions, if any. The Company's sole responsibility is to its Client and this document does not exonerate parties to a transaction from exercising all their rights and obligations under the transaction documents. This document cannot be reproduced except in full, without prior written approval of the Company. Any unauthorized alteration, forgery or falsification of the content or appearance of this document is unlawful and offenders may be prosecuted to the fullest extent of the law. Unless otherwise stated the results shown in this test report refer only to the sample(s) tested and such sample(s) are retained for 90 days only."

7.7 Frequency Stability

Test Requirement: FCC Part 95 Section 95.621 & 95.626

Test Method: Based on TIA603:2010.

Requirements:

According to FCC Section 95.626, the frequency stability shall be measured with variation of ambient temperature from –30℃ to +50℃ centigrade. Each FRS unit must be maintained within a frequency tolerance of 0.00025%.

According to FCC Section 95.621, the frequency stability shall be measured with variation of ambient temperature from –30℃ to +50℃ centigrade Each GMRS transmitter for mobile station, small base station and control station operation must be maintained within a frequency tolerance of 0.0005%.

Procedure:

a. Frequency stability versus environmental temperature

(1) Setup the configuration per Test Configuration for frequencies measurement inside an environment chamber, Install new battery in the EUT.

(2) Turn on EUT and set SA center frequency to the EUT radiated frequency. Set SA Resolution Bandwidth to 1 KHz and Video Resolution Bandwidth to 1 KHz and Frequency Span to 50 KHz. Record this frequency as reference frequency.

(3) Set the temperature of chamber to 50℃. Allow sufficient time (approximately 30 min) for the temperature of the chamber to stabilize. While maintaining a constant temperature inside the chamber, turn the EUT on and measure the EUT operating frequency.

(4) Repeat step 2 with a 10℃ decreased per stage until the lowest temperature -30℃ is measured, record all measured frequencies on each temperature step.

b. Frequency stability versus input voltage

(1) Setup the configuration per Test Configuration for frequencies measured at temperature if it is within 15℃ to 25℃. Otherwise, an environment chamber set for a temperature of 20℃ shall be used. The EUT shall be powered by DC 5.0 V

(2) Set SA center frequency to the EUT radiated frequency. Set SA Resolution Bandwidth to 1 KHz and Video Resolution Bandwidth to 1KHz. Record this frequency as reference frequency.

(3) Supply the EUT primary voltage at the operating end point which is specified by manufacturer and record the frequency.

Test Configuration:

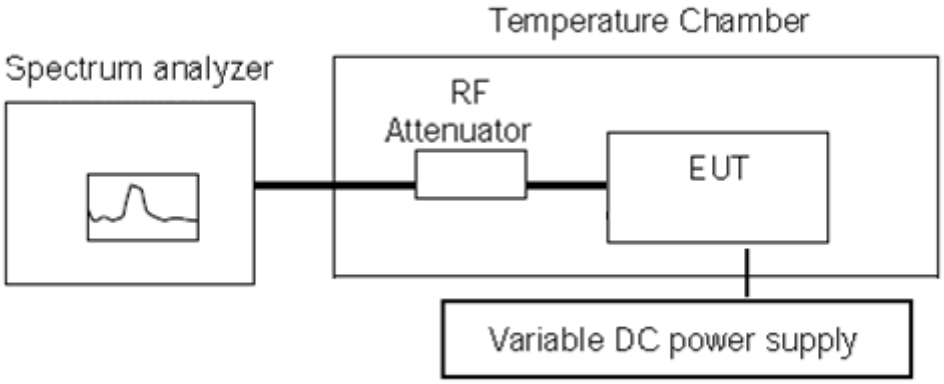

"This document is issued by the Company subject to its General Conditions of Service printed overleaf, available on request or accessible at www.sgs.com/terms_and_conditions.htm and, for electronic format documents, subject to Terms and Conditions for Electronic Documents at www.sgs.com/terms_e-document.htm. Attention is drawn to the limitation of liability, indemnification and jurisdiction issues defined therein. Any holder of this document is advised that information contained hereon reflects the Company's findings at the time of its intervention only and within the limits of Client's instructions, if any. The Company's sole responsibility is to its Client and this document does not exonerate parties to a transaction from exercising all their rights and obligations under the transaction documents. This document cannot be reproduced except in full, without prior written approval of the Company. Any unauthorized alteration, forgery or falsification of the content or appearance of this document is unlawful and offenders may be prosecuted to the fullest extent of the law. Unless otherwise stated the results shown in this test report refer only to the sample(s) tested and such sample(s) are retained for 90 days only."

Test Results:

Frequency Stability vs. Temperature

Assigned Frequency(MHz)	Temperature (℃)	Measured Frequency(MHz)	Frequency Deviation (KHz)	Limit (KHz)
FRS Channel 2 462.6125	-30	462.6126	0.000022	0.00025%
	-20	462.6127	0.000043	0.00025%
	-10	462.6126	0.000022	0.00025%
	0	462.6126	0.000022	0.00025%
	+10	462.6127	0.000043	0.00025%
	+20	462.6128	0.000065	0.00025%
	+30	462.6126	0.000022	0.00025%
	+40	462.6125	0.000000	0.00025%
	+50	462.6126	0.000022	0.00025%

Frequency Stability FRS vs. Supply Voltage

Assigned Frequency(MHz)	Voltage (V)	Measured Frequency(MHz)	Frequency Deviation (KHz)	Limit (KHz)
FRS Channel 2 462.6125	4.1	462.6125	0.000000	0.00025%
	4.2	462.6126	0.000022	0.00025%
	4.3	462.6125	0.000000	0.00025%
	4.4	462.6126	0.000022	0.00025%
	4.5	462.6127	0.000043	0.00025%
	4.6	462.6128	0.000065	0.00025%
	4.7	462.6125	0.000000	0.00025%
	4.8	462.6126	0.000022	0.00025%
	4.9	462.6127	0.000043	0.00025%
	5.0	462.6126	0.000000	0.00025%
Remark: The applicant declared the endpoint voltage 5.0Vdc. Nominal Voltage: 5.0VDC Nominal Temperature: 20℃ It will give the operation guidance to the customer in user manual.				
The unit does meet the FCC requirements.				

"This document is issued by the Company subject to its General Conditions of Service printed overleaf, available on request or accessible at www.sgs.com/terms_and_conditions.htm and, for electronic format documents, subject to Terms and Conditions for Electronic Documents at www.sgs.com/terms_e-document.htm. Attention is drawn to the limitation of liability, indemnification and jurisdiction issues defined therein. Any holder of this document is advised that information contained hereon reflects the Company's findings at the time of its intervention only and within the limits of Client's instructions, if any. The Company's sole responsibility is to its Client and this document does not exonerate parties to a transaction from exercising all their rights and obligations under the transaction documents. This document cannot be reproduced except in full, without prior written approval of the Company. Any unauthorized alteration, forgery or falsification of the content or appearance of this document is unlawful and offenders may be prosecuted to the fullest extent of the law. Unless otherwise stated the results shown in this test report refer only to the sample(s) tested and such sample(s) are retained for 90 days only."

8 Test Setup Photographes

Test model No.: NCT688

8.1 Conducted Emissions:

8.2 Radiated Emission

"This document is issued by the Company subject to its General Conditions of Service printed overleaf, available on request or accessible at www.sgs.com/terms_and_conditions.htm and, for electronic format documents, subject to Terms and Conditions for Electronic Documents at www.sgs.com/terms_e-document.htm. Attention is drawn to the limitation of liability, indemnification and jurisdiction issues defined therein. Any holder of this document is advised that information contained hereon reflects the Company's findings at the time of its intervention only and within the limits of Client's instructions, if any. The Company's sole responsibility is to its Client and this document does not exonerate parties to a transaction from exercising all their rights and obligations under the transaction documents. This document cannot be reproduced except in full, without prior written approval of the Company. Any unauthorized alteration, forgery or falsification of the content or appearance of this document is unlawful and offenders may be prosecuted to the fullest extent of the law. Unless otherwise stated the results shown in this test report refer only to the sample(s) tested and such sample(s) are retained for 90 days only."

8.3 Radiated Spurious Emission

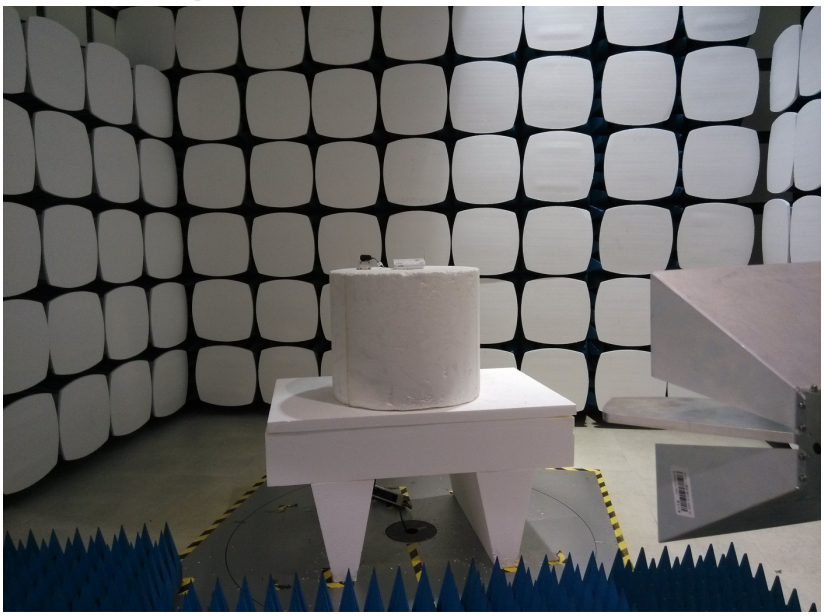

8.4 RF conducted

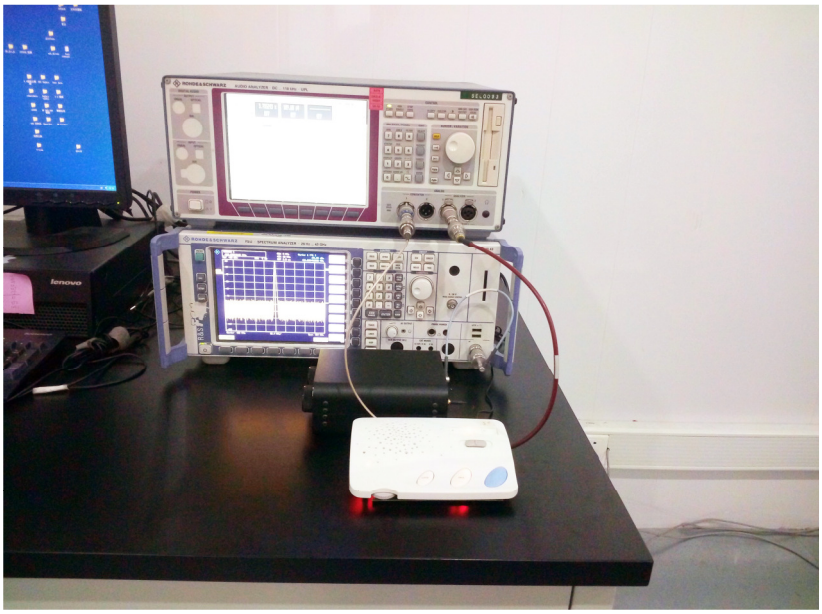

9 EUT Constructional Details

Refer to Appendix A - Photographs of EUT Constructional Details for SZEM1601000214CR.

"This document is issued by the Company subject to its General Conditions of Service printed overleaf, available on request or accessible at www.sgs.com/terms_and_conditions.htm and, for electronic format documents, subject to Terms and Conditions for Electronic Documents at www.sgs.com/terms_e-document.htm. Attention is drawn to the limitation of liability, indemnification and jurisdiction issues defined therein. Any holder of this document is advised that information contained hereon reflects the Company's findings at the time of its intervention only and within the limits of Client's instructions, if any. The Company's sole responsibility is to its Client and this document does not exonerate parties to a transaction from exercising all their rights and obligations under the transaction documents. This document cannot be reproduced except in full, without prior written approval of the Company. Any unauthorized alteration, forgery or falsification of the content or appearance of this document is unlawful and offenders may be prosecuted to the fullest extent of the law. Unless otherwise stated the results shown in this test report refer only to the sample(s) tested and such sample(s) are retained for 90 days only."