WRIST TALKIES™

Hands-free Secret Communication™

Ages 6 and Up
10538
Requires Six 357 (LR44) & Two 384 (LR41) button cell batteries, included.

Important: Please save this instruction sheet. It contains valuable product information.

Walkies-Talkies disguised as a Digital Watch!

To Use the Walkies-Talkies: (Figure 1)

1. Attach the Wrist-Talkie to your wrist using the comfortable strap.
2. In order to connect the two Walkie-Talkies, the on/off buttons (A) on both Walkie-Talkies should be pressed and held for 1 sec. Then, there is continuous tick sound which means the Walkie-Talkies are searching for each other. When the tick sound stop, the two Walkie-Talkies are connected.
3. To speak to the other agent, push and hold down the PUSH TO TALK Button (B) and speak into the Microphone (C). release the button when you are not talking.
4. HINT: for clearest communication use outdoors in line of sight with the other agent.

Morse Code Function: for secret & silent communication learn how to send Morse Code signals.

1. Push the LED Light Button to send Morse Code messages as instructed in the Morse Code Alphabet.
2. **INTERNATIONAL MORSE CODE**
   1. The length of a dot is one unit.
   2. A dash is three units.
   3. The space between parts of the same letter is one unit.
   4. The space between letters is three units.
   5. The space between words is seven units.

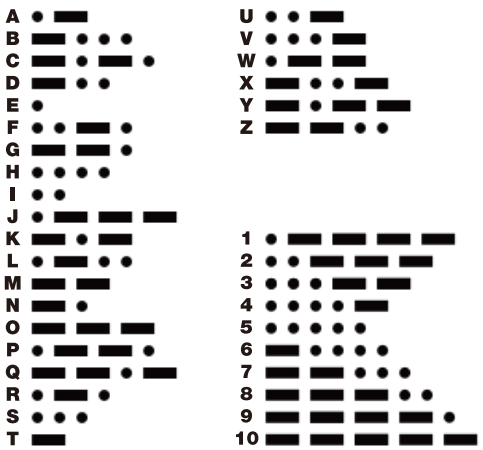

TO USE THE WATCH (Figure 2)

1. Lift the Protective Bezel and Press the MODE button to switch between Date, Time and Seconds views

HINT: Press the SET button once to and the view toggles between Date and Time automatically.

TO SET THE WATCH TIME and DATE (Figure 2)

1. From the Normal time view Press SET 2 times to select Month and then press MODE to adjust the month
2. Press SET again to select Day and then press MODE to adjust the day.
3. Press SET again to select Hour and then press MODE to adjust the Hour.
4. Press SET again to select Minutes and then press MODE to adjust the minutes.
5. Press SET again to save your entries and press MODE to return to the normal time view.

Figure 2

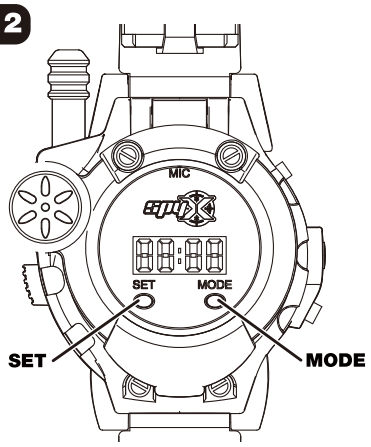

Figure 1

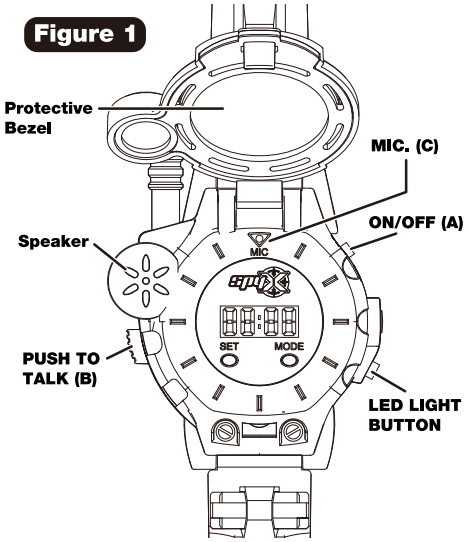

BATTERY SAFETY INFORMATION:

- Only adults should install and replace batteries. Do not recharge non-rechargeable batteries.
- Remove dead or exhausted batteries.
- Insert batteries correctly. Match positive and negative signs.
- The supply terminals are not to be short circuited.
- Do not use rechargeable batteries.
- Do not mix alkaline, standard (carbon-zinc), or rechargeable (nickel-cadmium) batteries.
- Do not mix old and new batteries.
- Only the batteries of the same or equivalent type recommended to be used.
- Do not dispose of batteries in a fire; they may explode. Dispose of batteries safely.

ATTENTION ADULTS-TO REPLACE BATTERIES

The SpyX Wrist Talkies Walkie-talkie function requires Three 357 (LR44) button-cell per walkie-talkie unit (6 batteries in total)

1. Figure 3 On the Back of the Watch, Loosen the Philips-head screws on the Battery Door and remove.
2. Install new battery into Battery Compartment as shown in Figure 3.
3. Replace and screw the battery door onto Back of Watch.

NOTE: The SpyX Wrist Talkies watch module uses a separate battery = one 384 (LR41) per unit.

The SpyX Wrist Talkies Watch Module requires One 384 (LR41) button cell battery per walkie-talkie unit (2 LR41 batteries in total)

1. Figure 4 On the Back of the Watch, First loosen and remove the screw on the Battery Door and remove the 3 LR44 Batteries to access the 4th screw on the back Module. Then Loosen all 4 of these remaining screws as shown in Fig 4.
2. Lift out the Back Module.
3. Remove the 2 small Philips screws on the silver flap and then Lift up the flap to access the compartment for the LR41 Battery
4. Install new battery into Battery Compartment with positive side up as shown.
5. Press the silver flap back in place and reinsert and tighten the 2 small screws
6. Align and Replace the Back Module and screw in the 4 Phillips screws to secure the Back Module in Place.
7. Replace the 3 LR44 batteries and then the Battery Door. Tighten the screws on the Battery door.

Figure 3

BACK OF WATCH

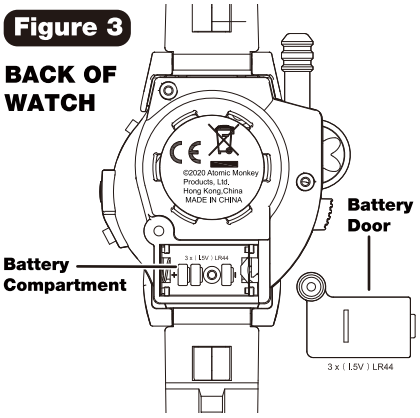

Figure 4

BACK OF WATCH

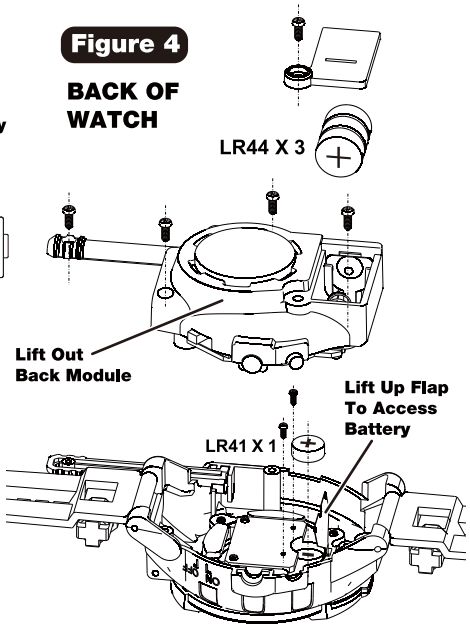

FCC ID:2AB4XAMP10538

ISEDC Warning

This device complies with Innovation, Science and Economic Development Canada License exempt RSS standard(s).
Operation is subject to the following two conditions:
(1) this device may not cause harmful interference, and (2) this device must accept any interference received,
including interference that may cause undesired operation of the device.
Le présent appareil est conforme aux CNR d' Innovation, Sciences et Développement économique
Canada applicables aux appareils radio exempts de licence. L'exploitation est autorisée aux deux conditions suivantes :
(1) l'appareil nedoit pas produire de brouillage, et
(2) l'utilisateur de l'appareil doit accepter tout brouillage radioélectrique subi,
même si le brouillage est susceptible d'en compromettre le fonctionnement.
The device is compliance with RF exposure guidelines, users can obtain Canadian information on RF exposure and compliance.
Le présent appareil est conforme Après examen de ce matériel aux conformité ou aux limites d'intensité de champ RF,
les utilisateurs peuvent sur l'exposition aux radiofréquences et compliance d'acquérir les informations correspondantes.

FCC Statement: This device complies with part 15 of the FCC Rules. Operation is subject to the following two conditions: (1) This device may not cause harmful interference, and (2) this device must accept any interference received, including interference that may cause undesired operation. Any Changes or modifications not expressly approved by the party responsible for compliance could void the user's authority to operate the equipment. **NOTE:** This equipment has been tested and found to comply with the limits for a Class B digital device, pursuant to part 15 of the FCC Rules. These limits are designed to provide reasonable protection against harmful interference in a residential installation. This equipment generates, uses and can radiate radio frequency energy and, if not installed and used in accordance with the instructions, may cause harmful interference to radio communications. However, there is no guarantee that interference will not occur in a particular installation. If this equipment does cause harmful interference to radio or television reception, which can be determined by turning the equipment off and on, the user is encouraged to try to correct the interference by one or more of the following measures: • Reorient or relocate the receiving antenna. • Increase the separation between the equipment and receiver. • Connect the equipment into an outlet on a circuit different from that to which the receiver is connected. • Consult the dealer or an experienced radio/TV technician for help.

A.M.P.

IF YOU HAVE ANY QUESTIONS, PLEASE CONTACT US AT www.atomicmonkeyproducts.com/help

⚠ WARNING:
This product contains a coin battery. A coin battery can cause serious internal chemical burns if swallowed.

© 2020 Atomic Monkey Products, Ltd. Hong Kong, China. All rights reserved. PRINTED IN CHINA

Product specifications subject to change.
WRIST TALKIES 10538-IS-US

⚠ WARNING:
CHOKING HAZARD - Small parts.
Not for children under 3 years.

⚠ WARNING:
Dispose of used batteries immediately. Keep new and used batteries away from children. If you think batteries might have been swallowed or placed inside any part of the body, seek immediate medical attention.

⚠ WARNING:
Changes or modifications to these units not expressly approved by the party responsible for compliance could void the user's authority to operate the equipment.