En

中文

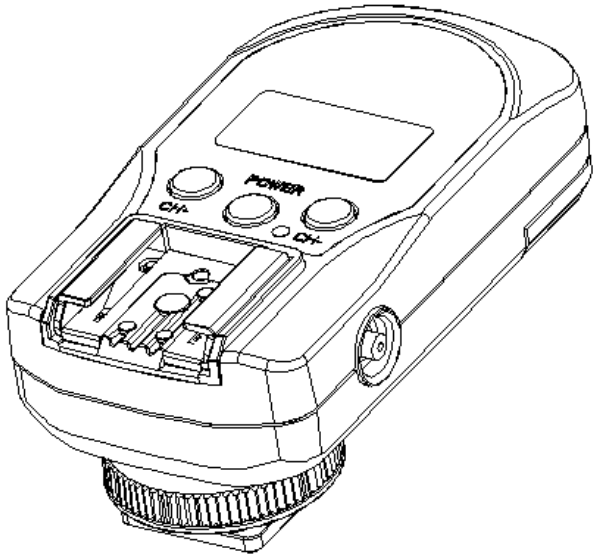

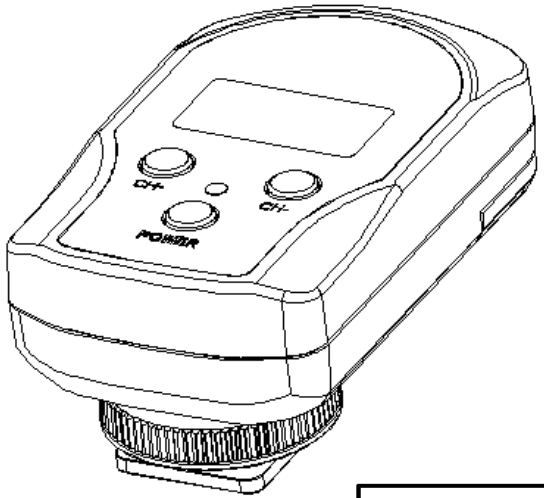

Product Manual

2.4G Wireless FlashTTL Trigger KR-201

Contents

About high performance of KR201 01
Cautions before use 02
KR201 of remote functions 03
Compatible equipment 04
The name of each part 06
The basic installation instructions 08
Install, and replace the battery 09
Install, and replace the transmitter 10
The fixed receiver 11
The use of flash bracket fixed installation 12
The receiver installed in the B-type light shelves 13
The receiver installed in the studio light 14

The receiver installed in the camera set-top shoe 15
The connection of the receiver and the flash 16
The connection of the receiver with the studio lights 17
The receiver and camera connection 18
KR201 of remote operation function Description 19
Transmitter 19
Receiver 22
Using the Nikon compatible contained flash 24
Use compatible upload flash or studio lights 24
KR201 of remote Specifications 25

2.4G wireless remote control KR201 instructions

1, using the world 's free 2.4GHZ wireless channels using FSK modulation mode , there are 16 channels to choose from .

2, the transmission distances of up to 150M .

3, KR201 can be set to the group level (group A , group B , group C , Group D , Group E) , set the switch in each group receiver and transmitter respectively , can be composed of up to 32 kinds of flash mode .

4, The , KR201 16 channels to choose from, can be avoided by theinterference of other products when using KR201 .

5, KR201N with LCD display , easy to set and view the transmitter , receiver group , channel .

6, The , KR201 with a power failure to save , re- set of data on electricity can be saved before the power failure of the transmitter and receiver power failure .

7 , KR201 that low - voltage detection function when the battery capacity is not enough , the LCD will do a low-voltage tips to remind users to replace the battery .

8 , the use of CR -2 lithium battery transmitter standby time : 1000 hours or more .

9 , CR -2 lithium battery receiver standby time : 500 hours or more .

Cautions before use

1 , Make sure camera and flash are turned off , before installing the trigger .

2 , this product is the attachment of electronic products , may be because of external environmental factors caused by the camera or flash can not or different Regular action , the likelihood of this is very small.

3 , triggers and equipment connection , do not pull the wire .

4 , Do not subjected to strong vibration may cause product failure .

5 , the polarity when installing the battery not to get reversed, otherwise the batteries may leak corrosive liquids , heat or explosion .

6, A long time when not in use , set the trigger power off, and remove the battery .

7, Please keep dry, do not touch the product with wet hands, and also can not be immersed in water or exposed to rain. Doing so may cause Not work properly, or even damage the product .

8, Do not be exposed to high temperatures in high temperature areas such as a closed car in direct sunlight , such as Control Panel .

9 , Do not use the product in explosive atmosphere , in violation of this warning may cause a fire or explosion .

10, this product involves battery , battery life in strict accordance with the appropriate operations specifications , or it may cause an explosion Fire and even bodily injury .

KR201N of remote functions

1,One can simultaneously support multiple flash or studio lights .

2, support flash auto focus.

3, support a variety of shutter speeds up to 1/ 8000 seconds .

4, A variety of studio lights can be fired with a PC cable at the sync speed of 1/8000s and can also achieve the synchronous flashing at a high speed.

Compatible equipment

KR201NTX compatible device

- Compatible with Nikon CLS DSLR cameras
  D3, D700, D2 series, D300, D200, D90, D80, D70 series, D5000, D3000, D60, D50, D40 series, F6 and so on.
- Compatible with Nikon I-TTL COOLPIX Camera
  COOLPIX8800, COOLPIX8400, COOLPIX P5000, COOLPIX P5100 and so on.
- Compatible with other DSLR camera
  compatible with Fujifilm and Nikon flash camera.

KR201NRX compatible device

- Compatible with Nikon's flash
  SB-900, SB-800, SB-600, SB-400.
- Compatible with other brands flash
  Compatible with Nissin & Nikon camera's flash.

Compatible equipment

KR201CTX compatibledevice

- The compatible Canon EOS DSLR camera
  1Dseries, 5Dseries, 7D, 50D, 40D, 30D, 500D, 550D, 450D, 400D, 1000D and so on.

KR201CRXcompatible device

- The compatible Canon EOS flash
  The compatible Canon flash such as EOS 580EXII, 580EX, 430EXII, 430EX, 270EXII
  220EXIIand various creative mode

KR201 various parts of the name

KR201TX transmitter

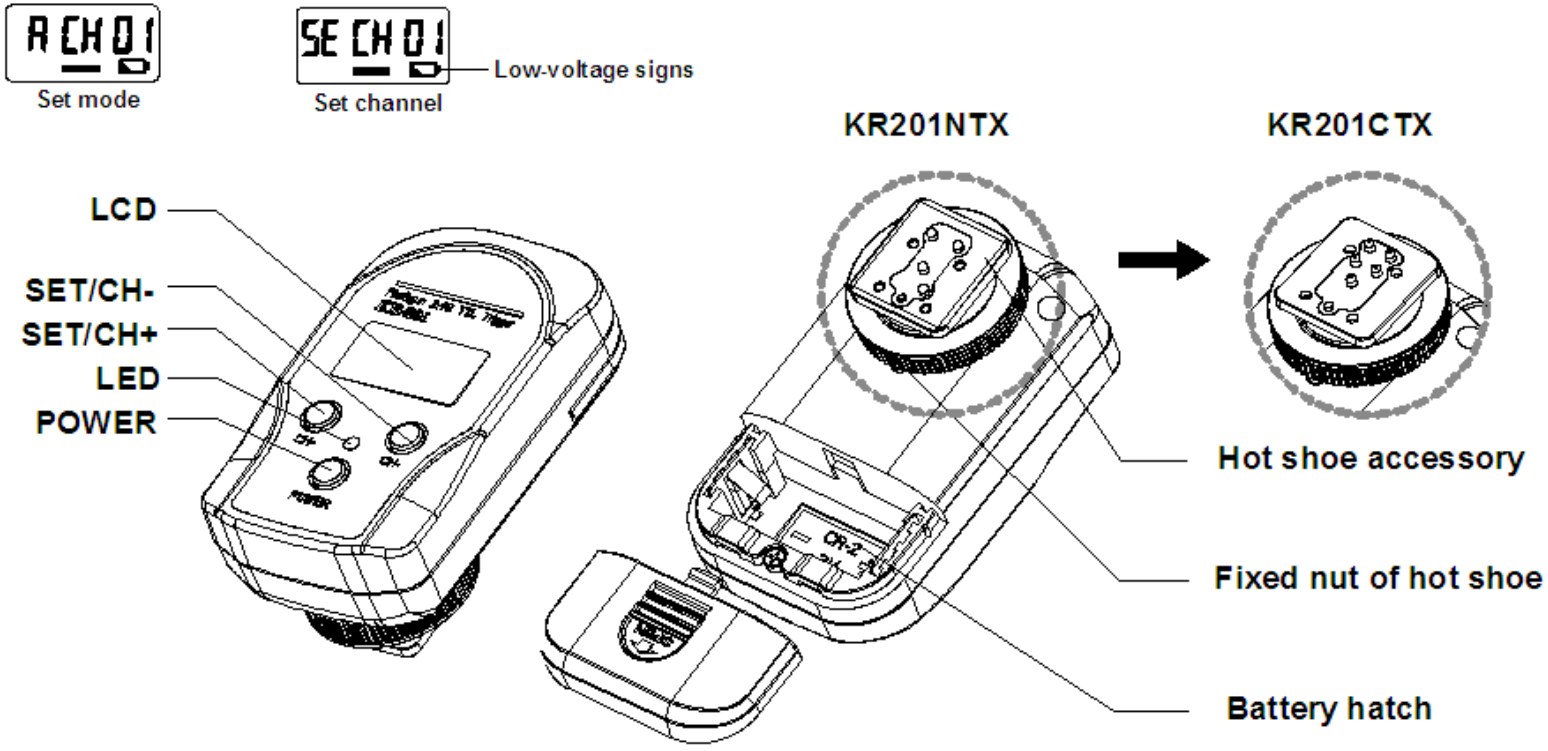

KR201 various parts of the name

KR201RX receiver

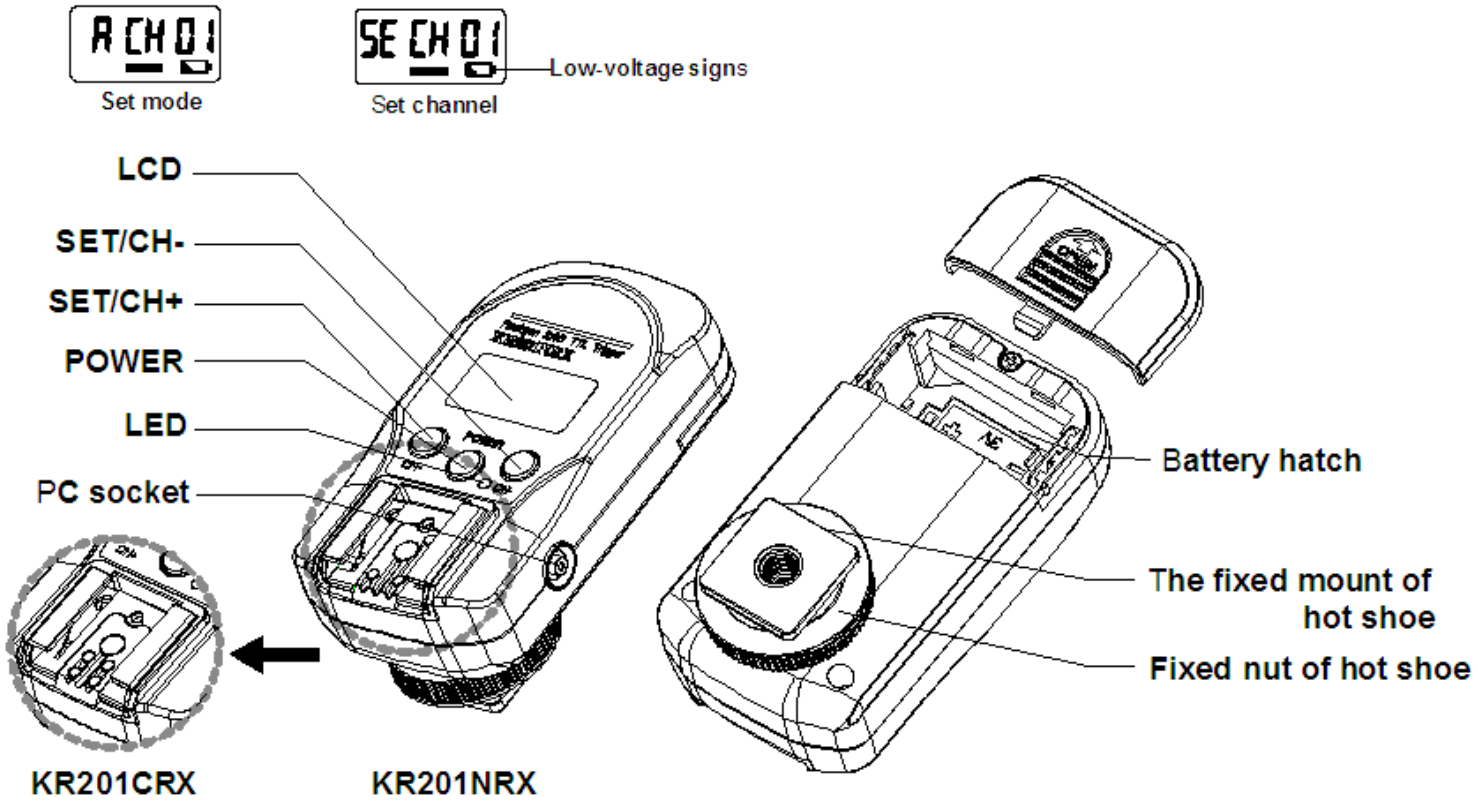

the basic installation instructions

install, and replace the battery :

Transmitter:

Install and replace batteries as follows :

1) Slide the battery compartment cover to open it.

2) In accordance with the graph [+] and [-] sign that the battery is loaded correctly , or control the KR201 products [+] and [-] sign the battery inserted .

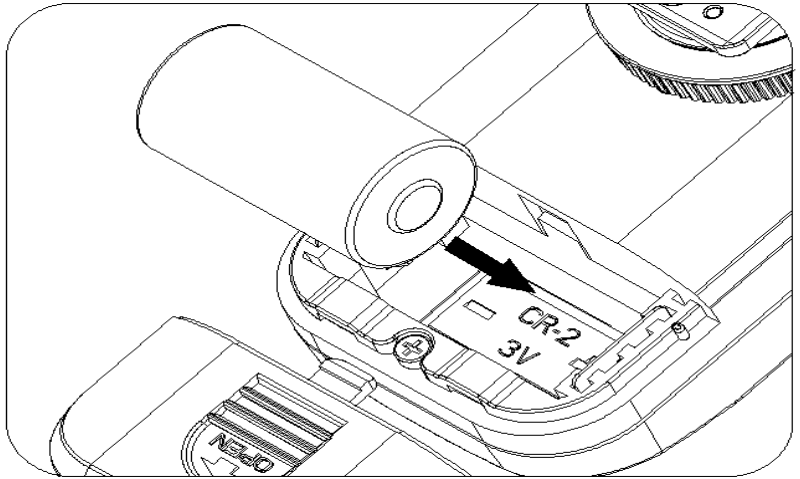

3) Close the battery compartment .

4) low battery displayed on the LCD , replace the batteries as soon as possible to ensure that your shooting flash normal .

the basic installation instructions

Receiver:

Install and replace batteries as follows :

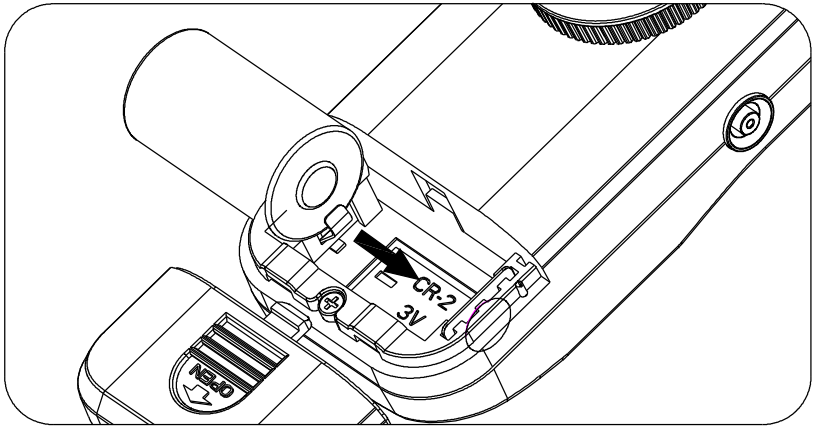

1) Slide the battery compartment cover to open it.

2) In accordance with the graph [+] and [-] sign that the battery is loaded correctly , or control the KR201 products [+] and [-] sign the battery inserted .

3) Close the battery compartment .

4) low battery displayed on the LCD , replace the batteries as soon as possible to ensure that your shooting flash normal .

Note: Please note that the size of the force of the removal and installation , excessive force may beProduct damage.

Note: Installing the battery should pay attention to the polarity of the battery , error cause the machine to install Not work properly, may damage the equipment or damage to property and human Injury.

the basic installation instructions

Install the transmitter :

1) Before installation make sure the camera and the transmitter is turned off .

2) the fixed hot shoe lock nut shown in Figure 1 right rotation release.

3) the shoe shown in Figure 2 , insert the camera set-top hot shoe seat, and plug in place .

4) hot shoe lock nut locking rotation according to Figure 3 as shown in the left .

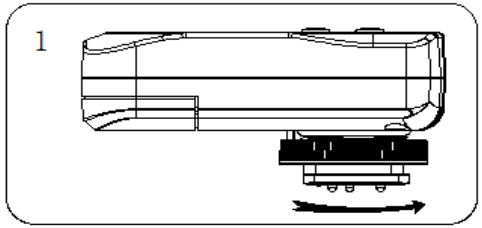

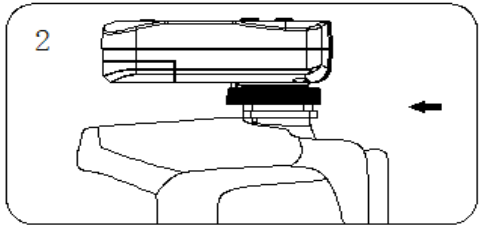

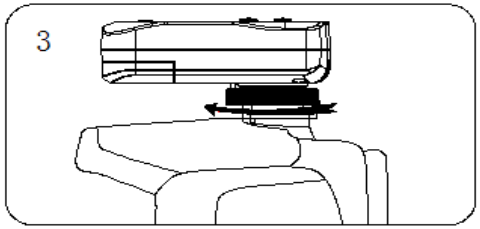

Removal of the transmitter :

1) turn off the camera .

2) The installation of the reverse process , the transmitter on top of the slave removed .

Note: after installation does not tighten the hot shoe lock nut may cause communication error Mistaken even the transmitter from the hot shoe accessories slipping.

Note: If the transmitter can not be pulled out from the camera's hot shoe accessories , please Check for hot shoe lock nut loosen completely .

Note : Do not force to pull out , so as not to damage the transmitter and camera .

the basic installation instructions

the fixed receiver :

The receiver provides two fixation methods: hot shoe fixing nut and use the hot shoe foot fixed .Fixed, use the hot shoe nut can be fixed in the annex to the camera body with quick plate triangular plus PTZ , and other fixed nut fixed bracket .

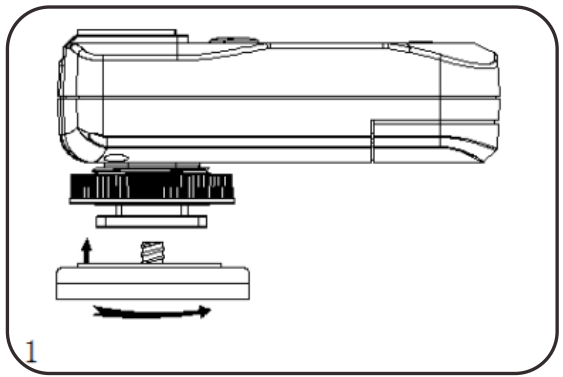

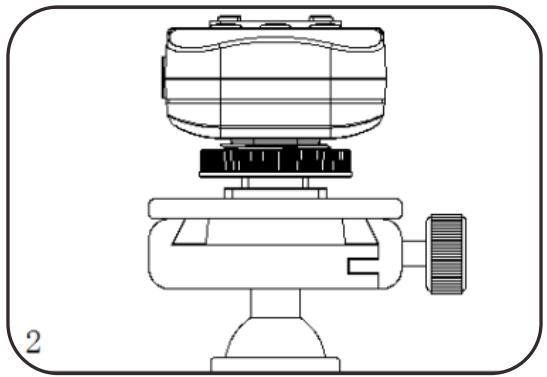

1) icon for quick release plate screws into the receiver

2) icon in the quick release plate mounted on the tripod head .

the use of flash bracket fixed installation

1) the receiver hot shoe locking nut release the icon to the right rotation .
2) the receiver shoe mount flash bracket pin is inserted as shown .
3) the receiver hot shoe lock nut rotating lock icon to the left .

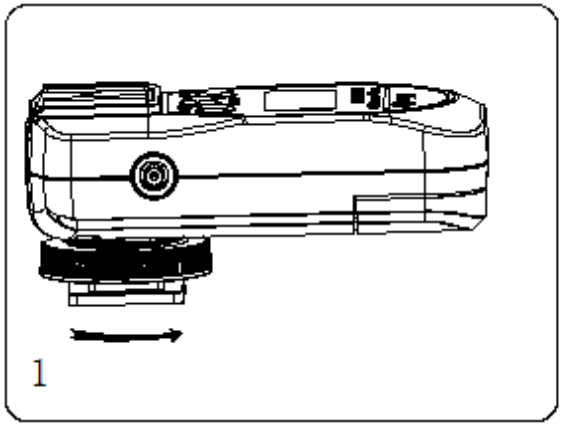

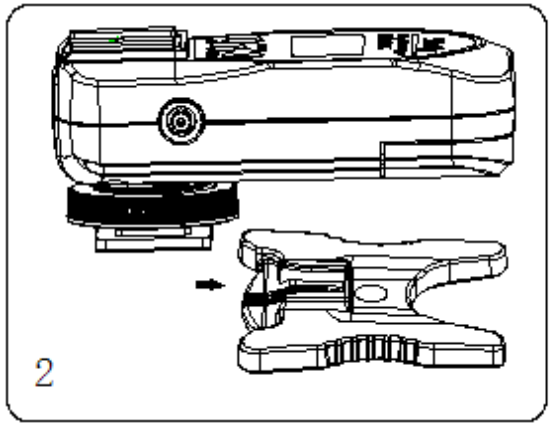

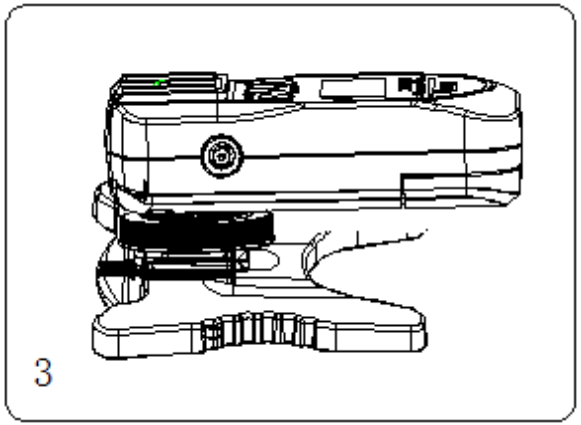

the basic installation instructions

the receiver installed in the B-type light shelves

1) the receiver hot shoe locking nut release the icon to the right rotation .

2) the receiver shoe mount foot into the B-type truss as shown .

3) B-type lamp rack screws rotating lock icon to the left .

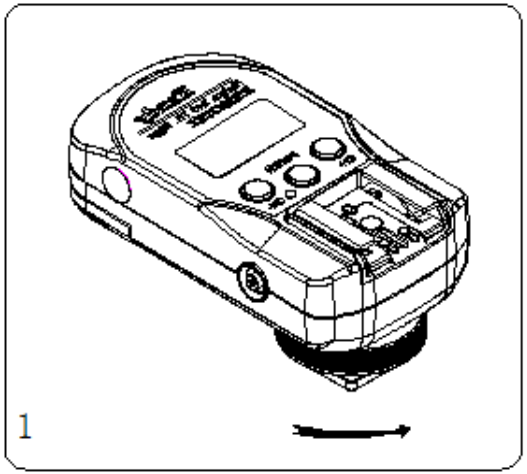

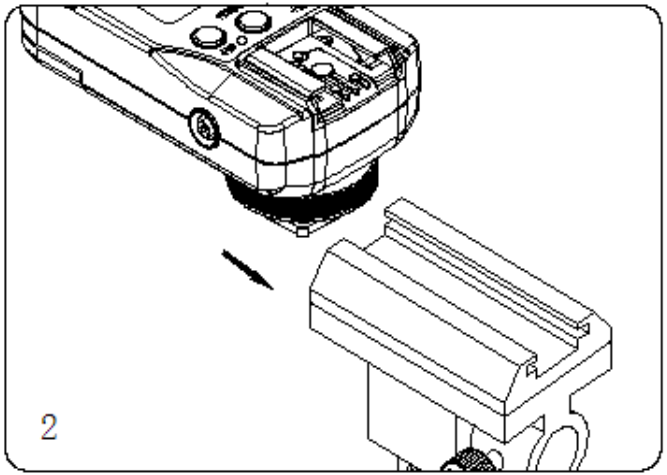

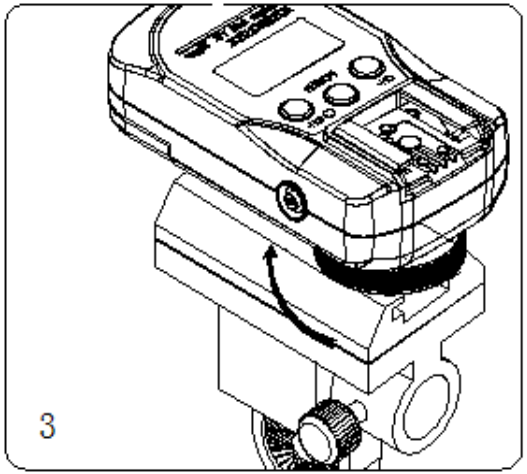

the basic installation instructions

the receiver installed in the studio light

1) accessories [KR103S12 the tape peel off protective films Icon posted on the television lights .

2) the receiver hot shoe locking nut Rotate loosen .

3) the receiver shoe mount foot according to the icons insert fittings[KR103S12 on .

4) the receiver hot shoe locking the locking nut left rotation .

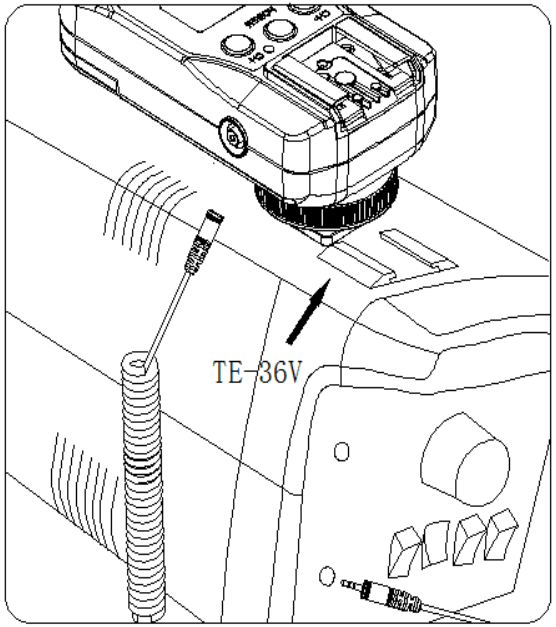

the basic installation instructions

the receiver installed in the camera set-top shoe :

When the receiver is used as a wireless shutter receive use ,

can be directlyFixed in the hot shoe of camera set-top seat .

(Fixed with flashLight bracket the same way)

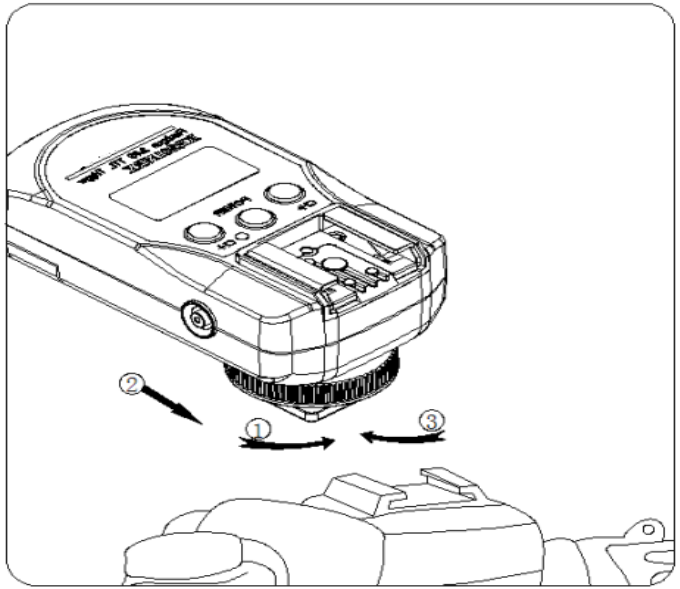

the basic installation instructions

the connection of the receiver and the flash :

Before the flash and the receiver is connected , make sure the flash is turned off , the receiver is turned on , and set a good communication channel .

KR201RX installation Airborne flash :

1) Airborne flash lock switch counterclockwise Rotation to open the hot shoe lock pin .

2) Airborne flash hot shoe foot as shown inserted Into the receiver 's hot shoe accessories .

3) Airborne flash lock switch clockwise Rotation, lock the flash.

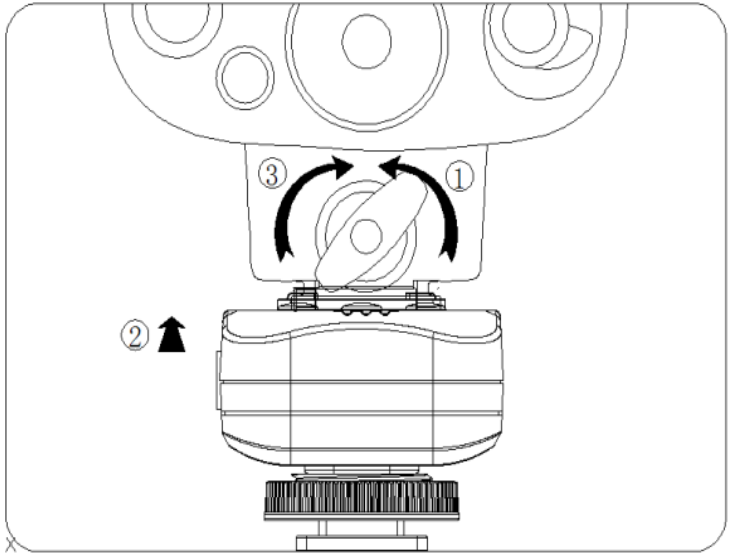

the basic installation instructions

Using the flash :

1) installed flash , adjust the flash head.

2) Open the flash power .

3) Select the flash mode .

4) Before shooting, make sure that the flash or camera -ready indicator lights up .

the connection of the receiver with the studio lights :

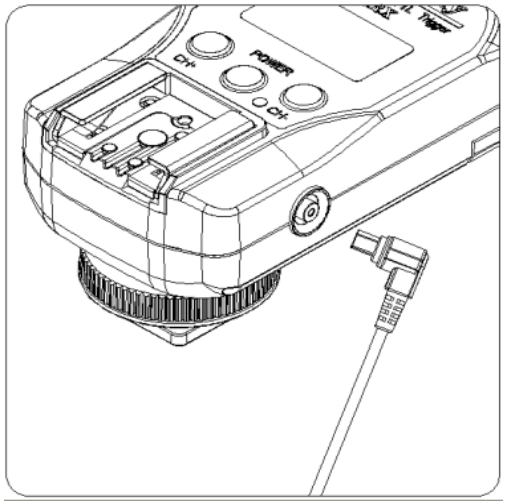

Receiver to trigger the studio lights , you need to use the supplied supplied The cable or adapter plug.

1) Press the icon to the PC end of the cable into then Closing device of the PC interface .

2) the 3.5mm plug into the remote control socket of the

3) If the use of 6.35mm sockets studio light , the need to pass

the basic installation instructions

The receiver and camera connection:

When using the remote control camera , you need to access

Receiver are connected through the shutter control cable with the camera :

1) First, the shutter control cable of the PC end into the receiving PC port of the device .

2) to open the camera shutter remote control socket protect cover .ive

3) then the icon will insert the camera shutter control cable terminals
Shutter remote control socket of the machine until it clicks into place .

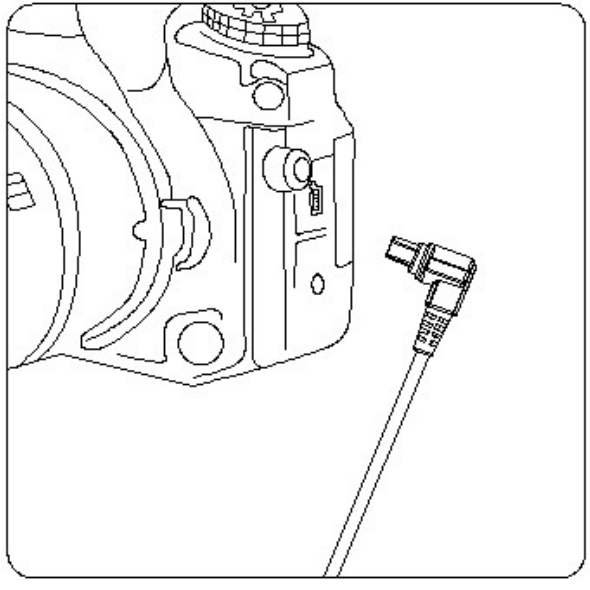

KR201 of remote operation function Description:

Transmitter:

1 open KR201TX power :

1) open KR201TX power , long press the [POWER] button for twoseconds after the release , KR201TX into work boot working state .

2) If KR201TX boot working state , long press the [POWER] button for two seconds after release, KR201TX enter the shutdown state .

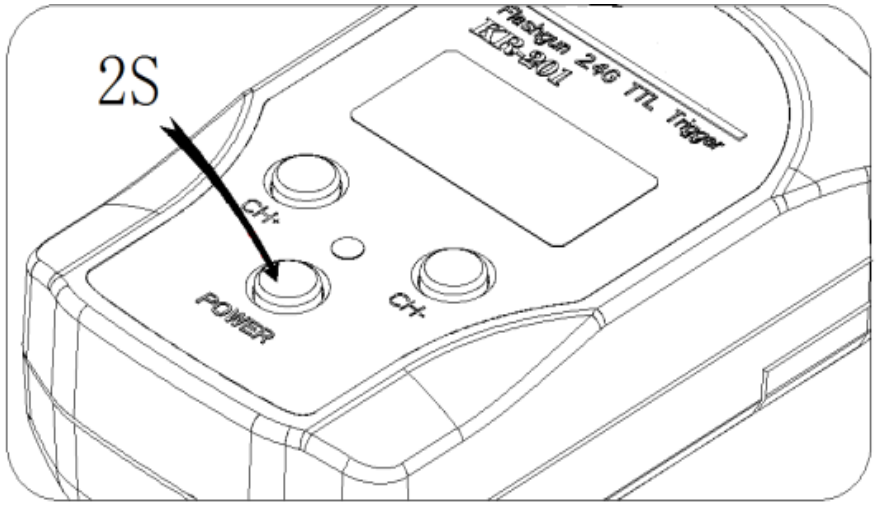

2 the set KR201TX function mode :

1) Make sure your camera is turned off or in standby mode , set the function .

2) The irregularities found in the use , by turning off and then open the camera power to re- to start KR201 remote .

KR201 of remote operation function Description:

3) KR201TX into the work boot state , you can by holding down the [CH -] button for two seconds after the function mode is set , the LCD display blinks : If \[ON A] to said set Group A TTL open .

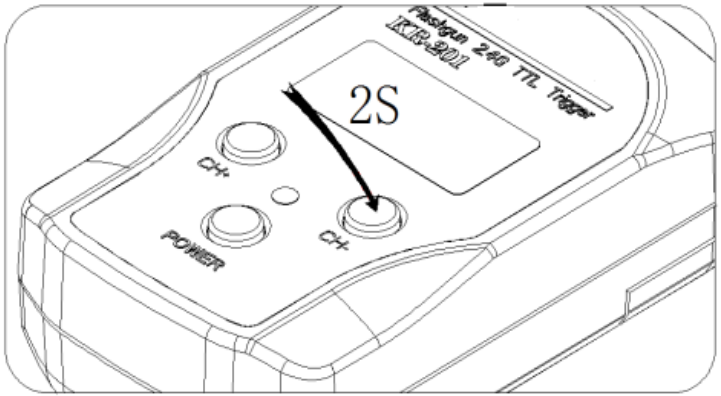

4) Tap the [CH -] button to enter the select group to do a feature set , A to E were the feature set .

5) Tap the [CH +] button mode is set to ON, OFF, which ON group TTL open , OFF when the group TTL Close .

When the group is set to OFF, all set to group A receiver does not participate in the flash . When the group is set to ON, all set for the group A receiver flash TTL mode to manual mode flash TTLf unctions or incompatible .

6) After setting the mode of function of all groups , by tapping the POWER button to exit the function setting mode .

KR201 of remote operation function Description:

3.set KR201TX channel :

1) KR201TX to enter the work boot state by holding downthe[CH +] button for two seconds after the channel settings , LCDdisplay blinking : [SET CH 00] indicates that the current channel is set to 00 channels .

2) flashes on the LCD display [SE of CH 00] , it can tap the [CH +] to increase channel digital [CH -] decreases the channel number , you can set the channels 00-15 of 16 channels .

3) When the set finished KR201TX channel tap the POWER button to exit the channel setting mode .

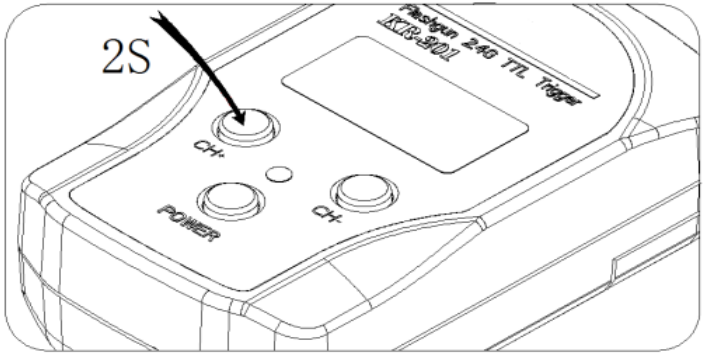

KR201 of remote operation function Description:

Receiver:

1, open KR201RX power :

1) KR201RX in boot mode , long press the [POWER] button for two seconds after the release KR201RX entering the shutdown work status .

2) KR201RX in the state of shutdown work long press the [POWER] button for two seconds after the release KR201RX into into the boot working state .

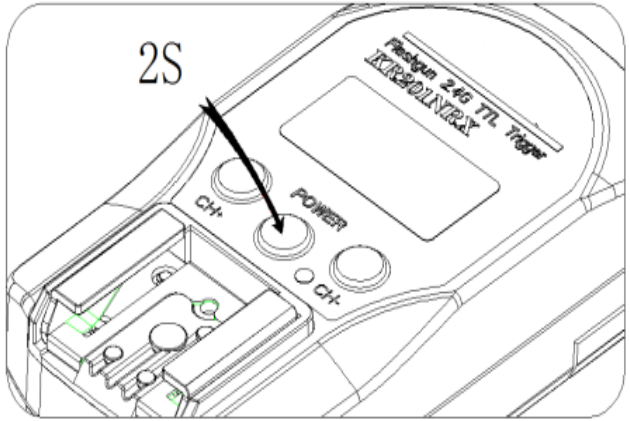

2, set KR201RX groups :

1) KR201RX into the work boot state , you can by holding downthe \[CH -] button for two seconds after the function mode is set , the LCD display blinks : If [SET GP A] to the said KR201RX set A group .

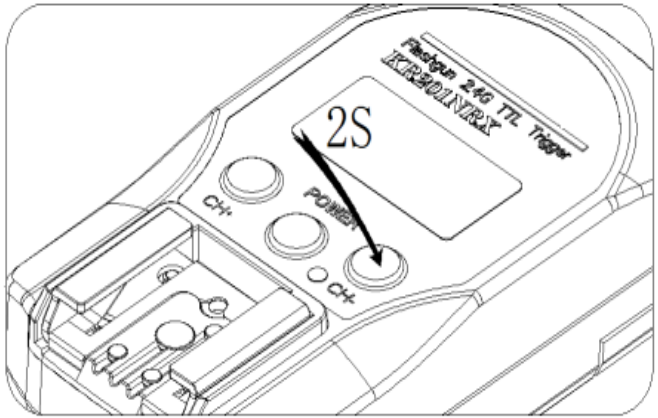

KR201 of remote operation function Description:

2) When the flash on the LCD display SET GP A] to tap the [CH +] to increase the group , [CH-] to reduce the group , you can set the AE 5 group .

3) When set the finished KR201RX which groups can tap the [POWER] button to exit group set mode .

3, set KR201RX channel :

1) KR201RX to enter the work boot state by holding down the [CH +] button for two seconds after the channel settings , LCD display blinking : [SET CH 00] indicates that the current channel is set to 00 channels .

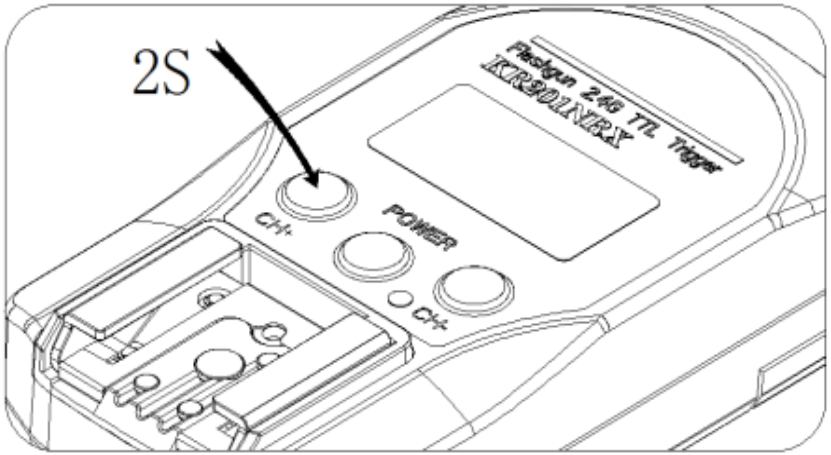

2) flashes on the LCD display [SE of CH 00] , it can tap the [CH +] to increase channel digital [CH -] decreases the channel number , you can set the channels 00-15 of 16 channels .

3) When the set finished KR201RX channel by tapping the [POWER] button to exit the channel setting mode .

KR201 of remote operation function Description:

4, using the Nikon compatible contained flash can realize the following functions:

1) I - TTL function support flash light mode flash , including I - TTL, FP , BL, M- mode .
2) I - the TTL function supports a variety of shooting modes and a variety of Nikon camera shutter speed up to 1/ 8000 seconds .
3) I - the TTL function support flash through the camera settings of various parameters , including exposure compensation , FV Lock , red-eye reduction flash mode / red-eye reduction slow sync , flash sync , set the ISO speed , power zoom function .

5.Use compatible upload flash or studio lights , you can achieve what function :

1) On-board flash can flash manual mode , the maximum shutter sync speed of 1/ 8000 seconds .
2) when using studio lights , you can through the receiver's PC interface to connect flash , maximum shutter sync speed of 1/ 8000 seconds .

KR201 of remote Specifications:

Type : Use the wireless remote control system in SFK2.4GHz

Transmission distance : 150 meters

Channel: 16

Transmitter standby time : 1000 hours (using the CR -2 lithium battery)

Receiver standby time : 500 hours (CR -2 lithium battery)

Volume: transmitter : 40x68x30mm

Receiver : 40 * 74 * 30mm

Weight: Transmitter : 35 g (with battery)

Receiver: 40 g (with battery)

Warning：

This device complies with Part 15 of the FCC Rules. Operation is subject to the following two conditions: (1) this device may not cause harmful interference, and (2) this device must accept any interference received, including interference that may cause undesired operation. changes or modifications not expressly approved by the party responsible for compliance could void the user's authority to operate the equipment.