Sindoh
Unmistakable

7X series

USER MANUAL

- **Read the User Manual before operating the product, and keep the manual at a convenient place near the product.**

www.rize3d.com

Safety Instructions

Be sure to observe the followlng instructions when using the device.

Warning: Failure to observe the instructions may lead to death or serious injury.

- Directly plug the power cord in the receptacle on the wall. Do not use extension cord.
- If the power cable or plug is worn or damaged, pull out the power plug.
- The exposure of the interior of the machine can cause electric shock or burns.
  Do not remove covers or screws other than specified in this manual.
- Please be cautious. In the process of printing, the temperature of the nozzle and the heated bed rise higher than 100 degrees Celsius.
- Do not place the machine in a highly moist environment as it may cause deformation and malfunction.
- Avoid contact of electrical terminal with metal product such as necklaces, coins, keys, watches, etc.
- Do not hold the shaft for lifting or moving of the printer.
- For the following situations turn off power and pull out the power plug
  - When in contact with liquid
  - When in need for a service or repair request
  - When the device cover is damaged
- For the method of disposal contact local service center or use a proper collection site.
- Please turn off power when leaving the office after business hours or in circumstances where machine is unoccupied for a long period of time as it may cause abrupt fire accidents.

Caution: Failure to observe instructions may cause injuries or damages to property.

- Protect device from humid or wet conditions eg. rain, snow, etc
- Remove power cord from receptacle on the wall before moving device.
- Be careful not to damage power cord while device is being translocated.
- When removing the power cord, please pull the plug and not the power cable.
- Be cautious of clips, staples and any other small metal objects from falling inside the device.
- Please be cautious on safety when touching the interior of the machine, e.g. cleaning the interior.
- Do not dispose of device or consumables together with household waste.
  For the method of disposal, please contact local service center or use a proper collection site.
- Interior of device may be very hot. Please do not touch the part with “Caution: High Temperature” sign or its surrounding areas as it may cause burns.
- Our product maintains high quality standards and performance.
  It is recommended to use genuine components only, components can be acquired from any authorized distributors.
- This machine is not suitable for use in areas that are easily accessible by children.

Before use

Thank you for purchasing our product.
This user manual contains detailed information about correct use of device and easy maintenance to maintain the optimal state, and to contribute to the rationalization of office work of your company.

Carefully read the user manual before using the device and keep close at hand.
In order to use device correctly and safely, please carefully note the precautions before use.

Prohibition and limitation

1. This User Manual has been created for the convenience of the user, actual product may differ from image and explanations shown.
2. The contents of this user manual is subject to change without notice. We are not responsible for the direct and/or indirect loss or damages caused by results of handling or operating the product in any case and for results occurring from user's negligence.
3. The copyrighted literary works can be duplicated and used for personal use or household use and within the same parameter. In other cases than the aforementioned, it is prohibited by law.
4. The above details present only a part of the applicable laws and regulations. Details on these laws/regulations may not be stated as they are. We do not guarantee its correctness and completeness. Please consult a legal advisor to check if the object you intend to print is legal.
5. User is responsible for all loss derived from modification of the product executed by the user or third party.
6. Font used in the printer GUI and the user manual is the "NANUM" font provided by NAVER.

Contents

Before using the Machine

1. Preface ---------- *1*

2. Conventions ---------- *2*

Symbols ---------- *2*

Other Information ---------- *2*

3. Safety Information ---------- *3*

4. Precautions ---------- *5*

4.1 Installation ---------- *5*

4.2 Moving the Machine ---------- *6*

4.3 Power Switch ---------- *7*

5. Consumables Handling ---------- *8*

5.1 PLA ---------- *8*

5.2 ABS ---------- *8*

5.3 Flexible ---------- *9*

5.4 PVA, PVA+ ---------- *9*

6. Instructions for Use ---------- *10*

7. Ventilation ---------- *11*

8. Notices ---------- *12*

9. Disposal of Used Battery ---------- *14*

10. Wifi Module Disclaimer ---------- *15*

11. USB Memory Disclaimer ---------- *17*

Chapter 1 Preparations for Machine Operation

1. Machine Specifications ---------- *1-2*

1.1 Printing ---------- *1-2*

1.2 Temperature/Speed ---------- *1-2*

1.3 Machine ---------- *1-2*

1.4 Software/Support ---------- *1-2*

1.5 Default Setting of Print layer Width ---------- *1-3*

2. Basic Components ---------- *1-4*

3. Understanding the Device Parts ---------- *1-5*

4. Installation (Product connection, Cartridge Setup and includes Software Installation) -------- *1-7*

4.1 Device Connection ---------- *1-7*

4.2 Program Installation ---------- *1-7*

Chapter 2 UI Menu Functions

1. UI Home Screen Functions ---------- *2-2*
1.1 Device Status Display ---------- *2-2*
1.2 UI Function Control ---------- *2-2*
1.3 Changing Screen / Application Functions ---------- *2-3*
Programs ---------- *2-3*
2. UI Menu Function description ---------- *2-4*
2.1 Printer ---------- *2-5*
USB ---------- *2-5*
Files Stored ---------- *2-6*
2.2 Cartidge ---------- *2-7*
Load ---------- *2-8*
Unload ---------- *2-9*
Unlock ---------- *2-14*
2.3 Cloud ---------- *2-17*
2.4 Settings ---------- *2-18*
Extruder ---------- *2-19*
Bed Leveling ---------- *2-20*
Z Offset ---------- *2-22*
Nozzle Control ---------- *2-23*
X, Y, Z ---------- *2-35*
Network ---------- *2-36*
Bed Lowering ---------- *2-40*
Cleaning Case ---------- *2-41*
Open Material ---------- *2-43*
Test Print ---------- *2-45*
S/W Update ---------- *2-47*
General Setting ---------- *2-48*
FAQ ---------- *2-53*
2.5 Information ---------- *2-55*
Quick Guide ---------- *2-57*

Chapter 3 Printing

1. Printing ---------- *3-2*
1.1 Printing from USB Flash Drive ---------- *3-2*
1.2 Printing Via PC ---------- *3-8*
1.3 Cloud Printing ---------- *3-8*

1.4 Print Job Management ---------- 3-13
1.5 Printing with Two Types of Filaments ---------- 3-14
1.6 Changing Filaments ---------- 3-14

Chapter 4 Printed Output Check

1. Printed Output Check ---------- 4-2
1.1 Detaching Printed Output ---------- 4-2
1.2 PVA(PVA+) Filament Removal Guide ---------- 4-4
1.3 Improving Printing Quality ---------- 4-4
2. If problems persist ---------- 4-5

Chapter 5 Maintenance

1. Machine Cleaning ---------- 5-2
1.1 Cleaning Case Maintenance ---------- 5-2
1.2 Printer Interior Cleaning ---------- 5-2
1.3 Periodical Inspection ---------- 5-2
Oil/Grease Inspection ---------- 5-2
1.4 Flexible bed and Nozzle Cleaning ---------- 5-2
1.5 Cleaning the inside of the Nozzle ---------- 5-3
1.6 Nozzle Tip Cleaning ---------- 5-10
2. Error Message and Solutions ---------- 5-13
3. Problems and Solutions ---------- 5-15
3.1 In Cases where Filament is Cut Between the Extruder and Nozzle ---------- 5-15
3.2 When Filament End is Visible Outside the Cartridge After Unloading ---------- 5-15
3.3 Solution for Notification 401, 601 ---------- 5-16
4. Replenishing Consumables ---------- 5-19
4.1 Bed Replacement ---------- 5-19
Removing Flexible Bed ---------- 5-19
Installing Flexible Bed ---------- 5-19
4.2 Filter Replacement ---------- 5-19
4.3 Cartridge Replacement ---------- 5-21
4.4 Nozzle Replacement ---------- 5-21

Chapter 6 Appendix

1. Type of Filaments (Material, Color) ---------- 6-2
2. Using an open material ---------- 6-3
2.1 Installing from the front ---------- 6-3
2.2 Installing from the top ---------- 6-6

1. Preface

This User Manual describes detailed explanations and points to note in connection with operating and using the machine. Please read the User Manual carefully before using machine, and keep it for reference purpose.

Important

- The content of the User Manual is subject to change without any prior notification.
  Sindoh shall not be liable for consequential, special, indirect damages or losses caused by the handling or operating of the machine or by the user's negligence.
- Copyrighted works can be printed and used for home and/or personal use; other usage is prohibited by law.
- The above details present only a part of the applicable laws and regulations and the details of the law may not be stated as they are. Sindoh is not responsible for its correctness and completeness.
  Please consult your legal advisor to check if the object you intend to print is legal.

Note

- The User Manual may include a little different descriptions of the machine from the actual one.
  Some options may not be available in some countries. Please contact local distributor for details.
  Some standard units are optional in some countries.
  Please consult your local service center.
- In some countries some models are not available.
  Please consult your local sales office.
- Naver Nanum font is applied to the GUI of the device and the user manual.

2. Conventions

Symbols

This manual uses the following symbols and meanings.

⚠ Warning

- **Indicates importance safety notes.**
  Ignoring these notes could result in serious injury or death.
  Be sure to read these notes carefully for your safe operations of the machine.

⚠ Caution

- **Indicates important safety notes.**
  Ignoring these notes could result in minor injury, or damage to the machine or to property.
  Be sure to read these notes for your safe operations of the machine.

Important

- Indicates points to pay attention to when using the machine, and explanations of likely causes of filament misfeeds, damage to originals, or loss of data.
  Be sure to read these explanations before operating the machine.

Note

- Indicates supplementary explanations of the machine`s functions, and instructions on resolving user errors.

Reference

- This symbol is located at the end of sections. It indicates where you can find further relevant information.

[ ]

Indicates the messages or menus that appear on the machine`s LCD display panel.

【 】

Indicates the names of each function key on the machine control panel and the display window.

Other Information

Some of the pictures used in this manual have been omitted to make it easier to see.
The contents of the UI in this manual may differ from what it actually appears.

3. Safety Information

Plug the power cord into a properly grounded outlet which is near and quickly accessible from the machine.
Do not use or place the machine in wet or humid environment.

⚠ Caution Hot Surface

- When you touch your body with this part, you are burned.
- To avoid burns, follow the instructions below.
  - The inside of the machine may be hot. To reduce the risk of injury from a hot component, allow some time to cool down.
    (Please be cautious of getting burns during printing as the Nozzle and the heating bed will maintain a high temperature of over 100 degrees.)
  - Do not put any portion of your body or objects on any part during machine operation as the motor and bed can be in very high temperature and can cause burns/injuries. Please be cautious.
  - When the power is on, do not let any of your body touch the machine except the bed.
    If you have to touch the bed while the power is on, please do so after the bed temperature has been lowered to room temperature.
  - If you have to touch any parts other than the bed, please do so after the bed and nozzle temperature have been lowered to room temperature.
  - After the printer has finished printing, check the LCD screen and built-in speaker.
    Do not touch the bed or the bed handle until you are told you can touch the bed.

⚠ Caution Electric Shock

- Contact with this part may result in electric shock.
- To avoid electric shock, follow the instructions below.
  - Proceed your work after turning off the machine and unplugging the power cord from the outlet in case of accessing the system board, or installing hardware or optional memory devices. If the machine is connected with other device, turn it off and separate the cables from the machine.
  - This product has been designed, tested and approved to meet strict safety requirements of international safety standard. Some safety features of parts may not be guaranteed. Sindoh is not liable for problems caused by using an unauthorized spare parts or consumables.
  - Disconnect the power cord and all the cables connected to the machine to prevent from any electrical shock when cleaning the outside or inside of the machine.
  - Be sure to turn off the power before removing the nozzle from the machine. Electrical damage to the internal parts of the nozzle may occur.

⚠ Caution Pain

- Do not twist, fold, step or place heavy objects on the power cord.
- Be careful with the power cord peeled off or overloaded.
- Do not let the power cord pinched by furniture or walls.
- Misusing the cord could result in fire or electrical shock.
- Check the cord regularly. When checking the cord, unplug the cord from the outlet first.
- Please consult a qualified engineer for services or repairs not stated in this User Manual.

⚠ Caution **Pain**

- To prevent personal injuries or damages to the machine, you need to follow the below instructions before moving the machine.
  - Do not open the front and top door during machine operation.
  - When the power is on, do not let any of your body touch the machine except the bed.
  - If you have to touch any parts other than the bed, please do so after turning the power off, removing the power cord from the plug and after the bed and nozzle temperature have been lowered to room temperature.
  - Turn the power switch off, then unplug the power cord from the power outlet.
  - Unplug and release all the cords and cables before moving the machine.
  - Only use the power cords provided with this machine or cords that are approved by the manufacturer.
  - Do not put any portion of your body or objects during machine operation, as the bed, motor, nozzle will be in operation and moving. Small objects such as necklace, hair, etc may cause personal injuries or damages to the machine.
  - If any problems occur(malfunction, body part being caught inside the machine, etc) during machine operation, quickly press the [Pause] or [stop] button on the touch screen.

Nozzle

Bed

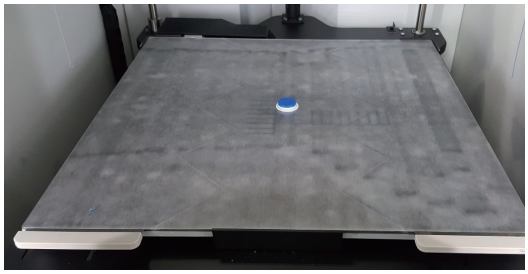

UI

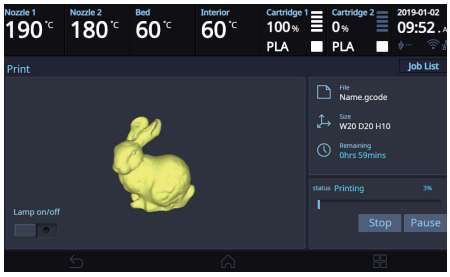

⚠ Caution **Pain**

- When you put the head in the machine during operation, it may cause pain.
- To prevent pain or damage to the equipment, follow the instructions below.
  - This part moves up and down. Do not put the head in the machine during operation.
  - Do not open the front door during printing.
  - If you have to get in the machine for maintenance, please do so after turning the power off, removing the power cord from the plug and after the bed and nozzle temperature have been lowered to room temperature.

⚠ Caution **Pain**

- When working on the top of the machine, you may get caught or fall and cause pain.
- To prevent pain or damage to the equipment, follow the instructions below.
  - Be careful not to fall when operating the top door or nozzles from the top of the machine.
  - Be careful of pain or nozzle tube jamming when closing the top door.

⚠ Caution **Pain**

- Contact with this part may cause pain.
- To prevent injury or damage to the equipment, keep away from this part during operation.

4. Precautions

4.1 Installation

⚠ Warning

- **Install the machine in a well ventilated area.**
  You can small odor during machine operation. It should not be harmful; however, if the area of where the machine is located is not ventilated, make sure to ventilate the area appropriately time to time.

Important

- Install the machine with its vents spaced at least 10 cm away from walls and other equipments.
  Secure properly sufficient space around the machine for easy ventilation and operation.
  Use the machine at temperatures of 16 °C ~ 29 °C and relative humidity of 20% ~ 70%.
  Do not install or use the machine outdoor.

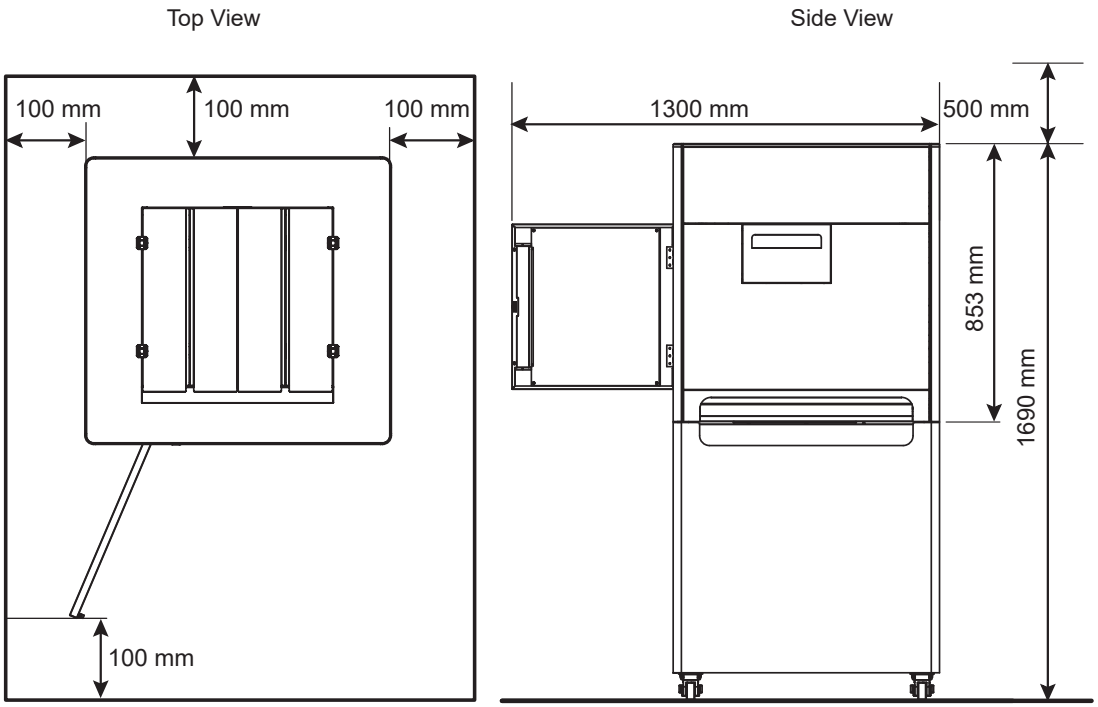

4.2 Moving the Machine

1. Power off the device.
2. Disconnect the power cord and cables from the device.
3. Make sure that the FLEXIBLE bed and cartridge are installed in the device, and close the front and top doors.
4. Four people are required to hold the transport handles on both sides to move the device with the bottom facing down.

⚠ Warning

- **Before moving the machine, be sure to unplug the power cord from the outlet.**
  When moving the printer, it is recommended that two people lift and move the printer for safety.
- **Hold the bottom handles of the machine when moving it.**
  Bend your knees enough to protect your spine when lifting the machine.
- **The unit is heavy. Make sure to carry with four or more people.**

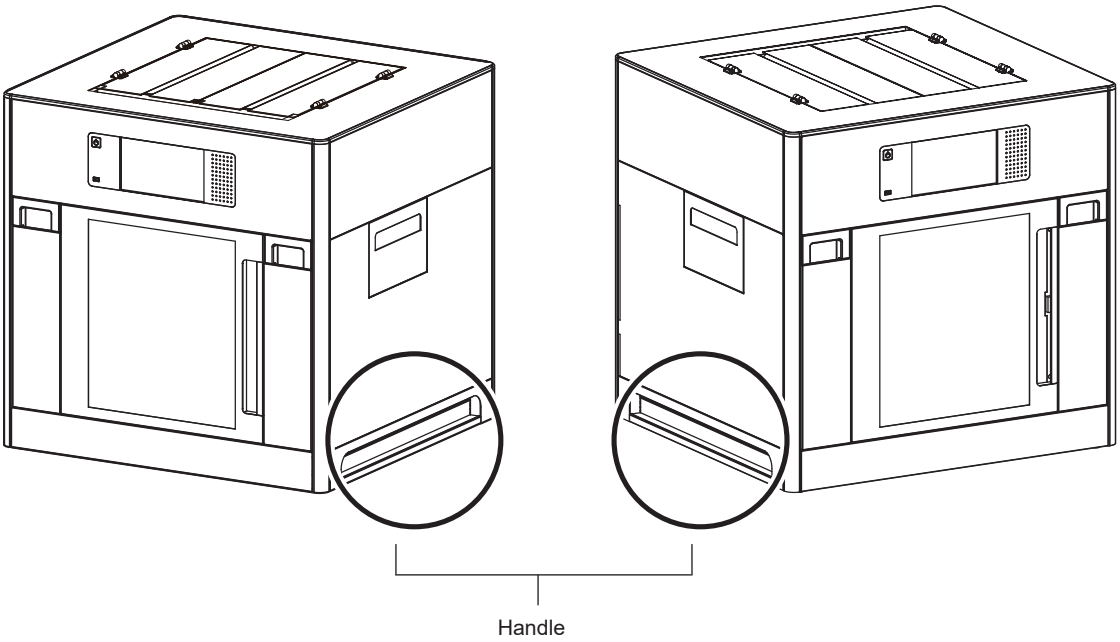

4.3 Power Switch

Before turning the power switch on, check that the power cord is connected to the socket tightly. Then, turn the power on by push the power switch to "│"(ON) position at the right on rear side of the Machine. To turn the power off, push the power switch to "○"(OFF) position.
│for "ON" IEC 60417-5007 (DB:2002-10)
○ for "OFF" IEC 60417-5008 (DB:2002-10)

The Switch used for this machine meets the requirements on the symbols and complies with its standard. But the horizontal straight bar is meaning the Power "ON" because its orientation is turned 90º to the counterclockwise. Please don't confuse the meaning of the horizontal straight bar "—".
Switch standard
IEC 61058-1
Symbol for the "OFF" position or the direction of actuation to the "OFF" position – circle, ○
Symbol for the "ON" position or the direction of actuation to the "ON" position - straight bar, │

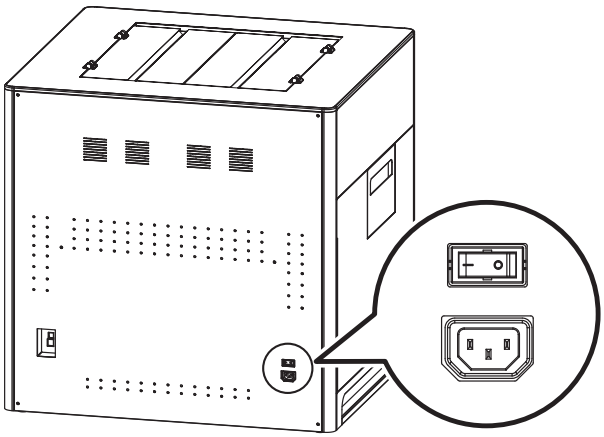

⚠ Warning

- **Do not plug or unplug the power cord or touch the power switch with wet hands. It may cause an electrical shock.**

Important

- Once you turn the power off, wait 5 seconds or longer to turn the power on again.
- If you are not using the device for a long time or if you are moving the device, turn the power off and unplug the power cord from the outlet.

5. Consumables Handling

⚠ Warning

- **Do not burn the Cartridge unit or filament. It may be a cause of big fire or burn by ignition.**

⚠ Caution

- **Keep them out of the reach of children.**
- **If skin irritation occurs after touching the filament, please see a doctor.**

Important

- Do not keep the cartridge unit in the following places.
  - Exposed to fire
  - Exposed to direct sunlight;
  - Where temperature or humidity may rise;
  - Where sharp change of temperature may occur;
  - Covered with dust;
  - Inside a vehicle for extended time.
- Keep cartridges away from physical impact or vibration.
- Do not unpack cartridges until you are just ready to use them.

5.1 PLA

It is a material that can be easily printed by the users using the 3D printer for the first time. You can easily print various colors and complex shapes. Ambient temperatures above 50 ° C can cause material properties to change, causing the material to expand or scatter. PVA can be used as a support material.

Nozzle temperature: 200 ° C
Bed temperature: 55 ° C
Recommended direction of the bed : Side A
Color: White, Black, Gray, Red, Yellow, Green, Blue, Pink, Purple
Storage : Store in cartridges with the silica gel that was included in the purchase.

5.2 ABS

Widely used in 3D printers, it has more rigidity and heat resistance than PLA. Due to the high temperature of the nozzle and the air when printing, printing are not available with other materials. ABS material can be deformed by shrinkage when the temperature in the cabin drops during printing. Particularly when printing a wide output surface to the bed, shrinkage may occur at the corners.
If printing ABS material on Side A of the bed sheet, the Printed Output may not detached from the bed sheet easily.
It is recommended to using Side B of the bed sheet when printing ABS material.
(If using Side B on the bed sheet, adjust the profile in the slicer program to create a G-code.)

Nozzle temperature: 230 ° C
Bed temperature: 90 ° C(Side A), 100 ° C(Side B)
Color: white, black, gray, red, yellow, green, blue
Storage: Store in cartridges with the silica gel that was included in the purchase.

5.3 Flexible

When using flexible materials, clean the inside of the nozzle after the filament load. Even if the inside of the nozzle is cleaned, if the inside of the nozzle has debris, the nozzle may be clogged or the filament may be transported. (Refer to P. 5-3 “1.5 Cleaning the Inside of the Nozzle”.)
Be careful because it is difficult to set the output condition compared with PLA and ABS materials. Warp or spider web may occur at output.
Flexible materials can cause twists in the extruder or inside the cartridge rollers. (Refer to P. 5-16 “3.3 Solution for Notification 401”.)

Nozzle temperature: 235 ° C
Bed temperature: 60 ° C
Recommended direction of the bed : Side A
Color: white, red, yellow, green, black, orange
Storage: Store in cartridges with the silica gel that was included in the purchase.

5.4 PVA, PVA+

PVA is a water-soluble support material. PVA can be used with PLA and it can be removed from the print by dissolving it under the water (refer to P. 4-4 “1.2 PVA Filament Removal Guide”).

This material is very sensitive to moisture, so it should only be used in environments with humidity below 50%.
Be careful when using in a humid environment because it may cause problems in filament transport (refer to P. 5-16 “3.5 Solution for Notification 401”.).
Carbonization may occur inside the nozzle during long hour printing. Please periodically clean the inside of the nozzle (refer to P. 5-3 “1.5 Cleaning the inside of the Nozzle”).

Storage : When not in use, put the PVA filament and silica gel in the zipper bag that was included in the purchase, and keep it away from outside air. If the PVA filament is already exposed to moisture for a long time, it should be stored for 48 hours or more with silica gel in a sealed container.

Nozzle temperature: 215 ° C(PVA), 200 ° C(PVA+),
Bed temperature: 55 ° C
Recommended direction of the bed : Side A

Important

- Please note that you shall follow our technical information or support in this manual at your own discretion and risk.
  We are not responsible for the use and handling of PVA filaments other than those described in this manual.
  PVA filament specifications can be changed without any notice.

6. Instructions for Use

⚠ Caution

- **The nozzle and the bed that are inside the machine are very hot during machine operation. Please be cautious not to touch the nozzle or the bed during removal of the printed objected or during inspection of the machine inside. It may become the cause of injuries or burns.**
- **Never operate the machine in the way this manual does not specifically instruct.**

Notification for California customers, USA

⚠ Warning

- **This product uses chemicals known to the State of California to cause cancer and birth defects or other reproductive harm. This appliance and its accessories can cause low-level exposure to chemicals during operation, which can be reduced by operating the appliance in a well ventilated area.**

⚠ Caution

- **Do not open the side cover or touch any parts of the extruder unit during machine operation to prevent personal injuries of damages.**
- **If you need inspection of the extruder unit, turn off the power and disconnect the power cord and follow the instructions below.**

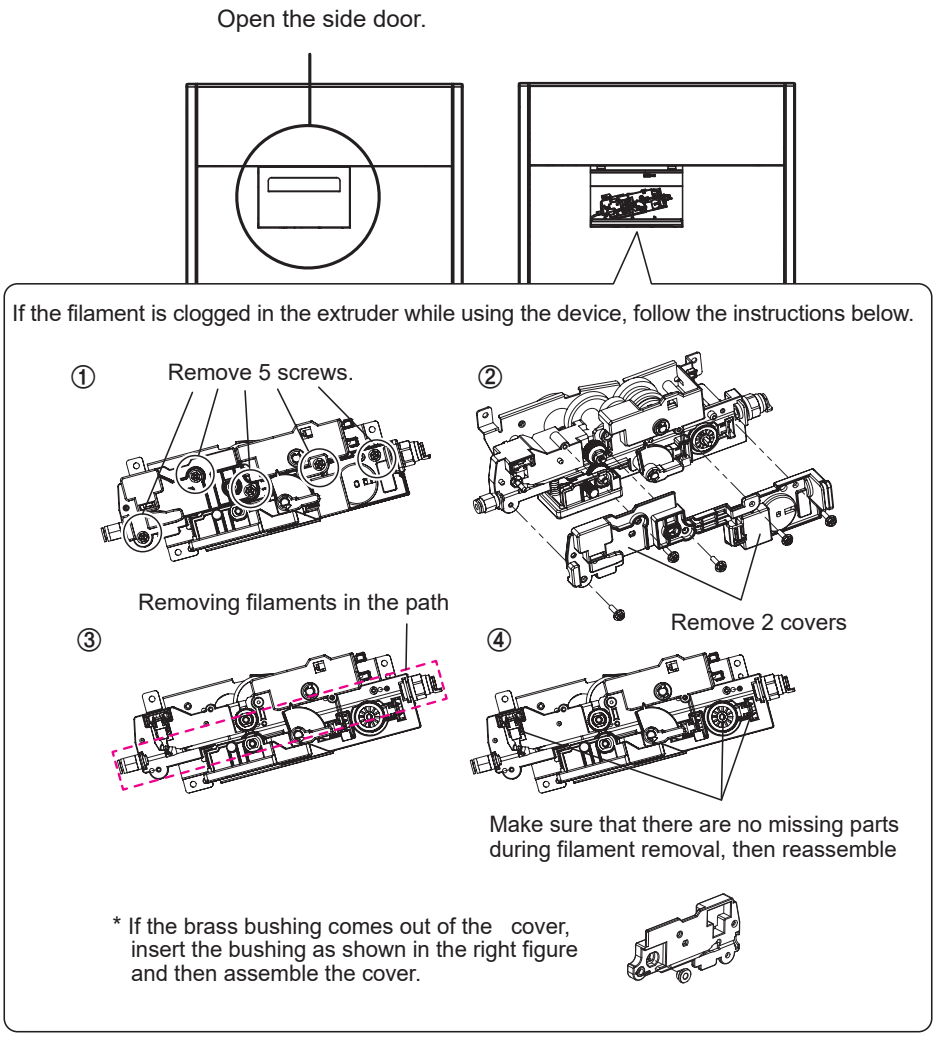

7. Ventilation

⚠ Caution

- **Use the machine in a place with good ventilation. If the machine is used in a place without good ventilation, this may be harmful for your health. Ventilate it on a regular basis.**
- **Do not block vents. Inappropriate cooling may lead to high temperatures inside the machine.**
- **In general, a new machine may produce small amount of gaseous components, so ensure good ventilation when the machine is used for the first time. If the machine is in operation for an extended time, do not stay in the same room for a long time.**

8. Notices

❖ Noise Emission Level

The following are measured in accordance of ISO 7779 and reported to meet ISO 9296.
Some modes may not be available in your purchased products.

Average Sound Pressure at 1 Meter Away	
Printing	55 dBA(Normal Print Condition - Printing speed 40 mm/s, Travel speed 130 mm/s)
Standby	under 40 dBA

❖ Temperature/Humidity

Operation	16 °C ~ 29 °C 20%RH~70%RH
Storage	-30 °C ~ 40 °C, 15%RH~85%RH(No condensation, must not touch the floor)

❖ Disposal of The Products

Do not dispose the machine and consumables together with household wastes.
For disposal or recycling, contact your local sales office.

❖ EMI(Electromagnetic Interference) Notice

This machine complies with the limits for Class A.
Class A (Industrial Device) : This is a class A product. In a domestic environment this product may cause radio interference in which case the user may be required to take adequate measures.

① FCC COMPLIANCE STATEMENT

This device complies with part 15 of the FCC Rules. Operation is subject to the following two conditions: (1) This device may not cause harmful interference, and (2) this device must accept any interference received, Including interference that may cause undesired operation.

② INFORMATION TO USER

This equipment has been tested and found to comply with the limits for a Class A digital device pursuant to part 15 of the FCC Rules. These limits are designed to provide reasonable protection against harmful interference when the equipment is operated in a commercial environment. This equipment generates, uses and can radiate radio frequency energy and, if not installed and used in accordance with the instruction manual, may cause harmful interference to radio communications. Operation of this equipment in a residential area is likely to cause harmful interference in which case the user will be required to correct the interference at his own expense.

③ CAUTION

Any changes or modifications not expressly approved by the manufacturer responsible for compliance could void the user's authority to operate the equipment.

❖ Wireless LAN Specifications

The wireless device may be affected by electromagnetic interference so it should not be used for life saving services.

❖ WLAN Notice

Exposure to radio frequency radiation
The following notice is applicable if your printer has a wireless network card installed.
The radiated output power of this device is far below the FCC radio frequency exposure limits.
A minimum clearance of 20 cm (8 inches) must be maintained between the antenna and any persons for this device to satisfy the RF exposure requirements of the FCC.

❖ Power Consumption

Power Consumption of the Products
The below table shows power consumption.

Mode	Description	Power Consumption(W)
Printing	A device is printing using electronic input data.	Max. 1000W
Standby	A device is in standby mode.	Max. 750W
Power On	A power plug is plugged into the outlet with the machine's switch on.	15W
Power Off	A power plug is plugged into the outlet with the machine's switch off .	0.5W

The above power consumption is the hourly average value.
Instant power consumption can be much higher than the average value.

Deactivated Mode

The machine consumes power even in the deactivated mode. Unplug the power cord to completely stop the power consumption.

Total Energy Usage

It would be useful to calculate the Total energy usage of the machine.
Since the electricity bill is charged in Watt unit, you have to multiply time spent in each mode by power consumption in order to calculate the energy use.
Total energy usage is the sum of energy used in each mode.

Condensation

Dramatic change of the ambient temperature may produces water droplets on the interior and exterior of the machine. Wipe the water droplets on the outer surface, but for the inside please let them dry off by leaving front door and cover opened.

9. Disposal of Used Battery

Control board uses a Lithium battery.
Please discard used batteries following the environmentally friendly procedure stated on the manufacturer guidelines.
To replace batteries, please contact a qualified service engineer.

10. Wifi Module Disclaimer

❖ **This module includes a Wifi module, compatible only with Sindoh 3DWOX models.**

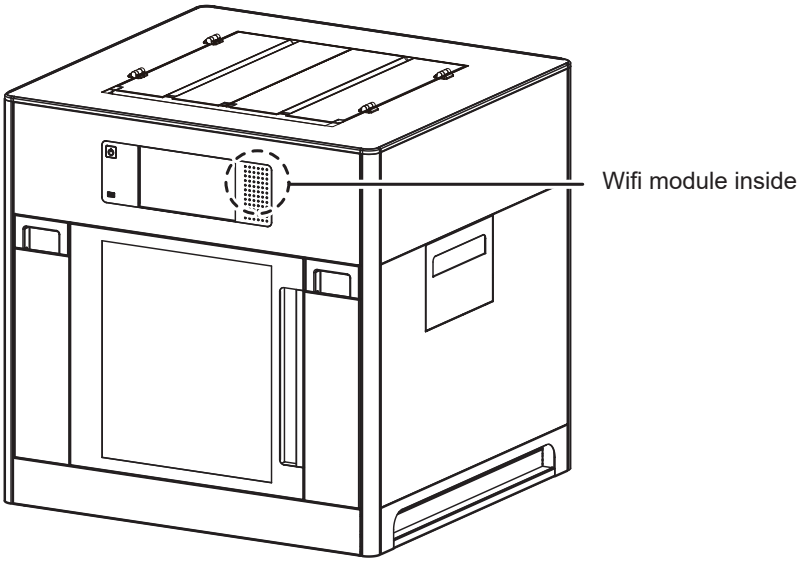

Important

- This Wifi module can cause radio interference, therefore it should not be used for any purposes related to human lives.
- Do not expose this product to water, humidity or liquid.
- Do not expose this product to direct light, hot temperature or fire.

⚠ Warning

- If the machine has been modified by an unauthorized personnel, Sindoh is not liable for the machine trouble or failure.

⚠ Caution

- To prevent RF signals that exceed FCC RF exposure limits from being exposed to human, this module has been mounted in a place that minimizes human access.

❖ Precautions

Frequency	IEEE 802.11b : 2412MHz ~ 2462MHz IEEE 802.11g : 2412MHz ~ 2462MHz IEEE 802.11n(20MHz) : 2412MHz ~ 2462MHz IEEE 802.11n(40MHz) : 2422MHz ~ 2452MHz
Antenna Power Density	IEEE 802.11b : 10mW(10dbm)/MHz IEEE 802.11g : 10mW(10dbm)/MHz IEEE 802.11n(20MHz) : 10mW(10dbm)/MHz IEEE 802.11n(40MHz) : 10mW(10dbm)/MHz
No. of Channels	IEEE 802.11b : 11 IEEE 802.11g : 11 IEEE 802.11n(20MHz) : 11 IEEE 802.11n(40MHz) : 7
Modulation	IEEE 802.11b : DSSS/CCK IEEE 802.11g : OFDM IEEE 802.11n(20MHz) : OFDM IEEE 802.11n(40MHz) : OFDM
Power Consumption	5V 500mA(Maximum)
Dimension	37.0mm X 28.0mm X 3.7 mm
Operation Temperature	0 ~ 60 °C
Storage Temperature	-10 ~ 80 °C

11. USB Memory Disclaimer

❖ FCC COMPLIANCE STATEMENT

This device complies with part 15 of the FCC Rules. Operation is subject to the following two conditions: (1) this device may not cause harmful interference, and (2) this device must accept any interference received, including interference that may cause undesired operation.

❖ INFORMATION TO USER

This equipment has been tested and found to comply with the limits for a Class B digital device, pursuant to part 15 of the FCC Rules. These limits are designed to provide reasonable protection against harmful interference in a residential installation.
This equipment generates, uses and can radiate radio frequency energy and, if not installed and used in accordance with the instructions, may cause harmful interference to radio communications.
However, there is no guarantee that interference will not occur in a particular installation.
If this equipment does cause harmful interference to radio or television reception, which can be determined by turning the equipment off and on, the user is encouraged to try to correct the interference by one more of the following measures:

- Reorient or relocate the receiving antenna.
- Increase the separation between the equipment and receiver.
- Connect the equipment into an outlet on a circuit different from that to which the receiver is connected.
- Consult the dealer or an experienced radio/TV technician for help.

❖ CAUTION

Any changes or modifications not expressly approved by the manufacturer responsible for compliance could void the user's authority to operate the equipment.

❖ Specification of compatible USB flash drive for 3DWOX

- Please use the enclosed USB flash drive.
- The enclosed USB flash drive is in FAT32 format.
  The 3DWOX 3D printer does not support USB flash drives in NTFS format.
- The warranty will not be valid if a 3rd party USB drive is used.

❖ IC Identification on Class of ITE

CAN ICES-3 (B)/NMB-3 (B)

DECLARATION OF CONFORMITY

Product name : USB Flash Drive
Model name : 8GB-WJ004, 4GB-WJ004
FCC Rules : Tested to comply with FCC Part 15, Class A
Operating Environment : For HOME OR OFFICE USE

Tested to Comply with FCC Standards

FOR HOME OR OFFICE USE

FCC COMPLIANCE STATEMENT

This device complies with part 15 of the FCC Rules. Operation is subject to the following two conditions: (1) this device may not cause harmful interference, and (2) this device must accept any interference received, including interference that may cause undesired operation.

RESPONSIBLE PARTY

Name : Sindoh America, Ltd.
Address : 6047 Tyvola Glen Circle, Suite #115, Charlotte, NC 28217
Phone No. : 1-704-414-6690

We hereby declare that the above specified equipment with the trade name and model number was tested conforming to the applicable FCC Rules under the most accurate measurement standards possible, and that all the necessary steps have been taken and are in force to assure that production units of the same equipment will continue to comply with the Commission's requirements.
Manufacturer : Sindoh Co., Ltd.
Address : 3, Seongsuiro24(isipsa)-gil, Seongdong-gu, Seoul, 04797 REPUBLIC OF KOREA

3DWOX 5X / 7X/ riZE 7XC
USER MANUAL

Preparations for Machine Operation

1

1. Machine Specifications

1.1 Printing

Printing Method	Fused Filament Fabrication
Max. Print Length(mm)	5X : W(max):350, D(max):350, H(max):350 7X, riZE 7XC: W(max):370, D(max):390, H(max):450 W(max):380, D(max):390, H(max):450 (Expanded print mode)
Print Layer Thickness Setting	0.05~0.4mm
Basic Nozzle diameter	0.4mm
Filament width	1.75mm
Printable materials	* Sindoh : PLA, ABS, FLEXIBLE, PVA(Water-soluble) PVA+(Water-soluble) * Open Material : PLA, ABS, FLEXIBLE, PVA(Water-soluble), ASA, PETG, etc
Printable color	White, Black, Gray, Red, Yellow, Green, Blue, Pink(PLA), Purple(PLA)
Bed leveling	Auto leveling
Print Head	Two Nozzle

* Using filament containing abrasive additives (e.g. metal component, carbon fiber) may cause the breakdown of the machine and will shorten its life time drastically.

1.2 Temperature/Speed

Continuous Nozzle Usage/ Maximum Temperature	Recommended Temperature(Nozzle): PLA 200℃, ABS 230℃, Flexible 235℃, PVA 215℃, PVA+ 200℃ / Max 250℃
Continuous Bed Usage/ Maximum Temperature	Recommended Temperature(Bed): PLA 55℃, ABS(Side A) 90℃, ABS(Side B) 100℃, Flexible 55℃ , PVA(PVA+) 55℃ / Max 110℃
Recommended printing speed/ maximum speed	PLA 80mm/s, ABS 80mm/s, PVA(PVA+) 25mm/s, FLEXIBLE 30mm/s Recommended / 200mm/s max

* Continuous operation at maximum temperature can cause malfunction, Please use in case of nozzle clogging or other troubles.

1.3 Machine

Power	Max. 1000W
Dimensions	864 x 810 x 1690(W x D x H)
Weight	167kg (excluding cartridge)
Port	USB Device, USB Host , Wifi, Ethernet
Cartridge	Auto Load / Unload

1.4 Software/Support

Supported Software	Sindoh Exclusive Slicer
Supported File Format	*.stl, *.ply, *.obj, *.gcode, *.amf
Supported Operating System	Windows 7 or above, Mac OSX 10.10 or above
Recommended Memory Requirements	DRAM 8 GB+ / VRAM 2 GB+ (5X, 7X, riZE 7XC model only)

Note

- Graphics must support OpenGL 2.0 or higher.
- This product can be utilized with Alexa Echo for hands-free control. Please refer to the below URL for more details on how to use.(https://3dprinter.sindoh.com/support/downloads)

1.5 Default Setting of Print layer Width

Nozzle Width	0.4mm
Print Layer Width	0.2mm

2. Basic Components

Please check all basic components are in the box.

⚠ Caution

- **Please keep the box and packaging material; they are needed for product exchange or repair service.**

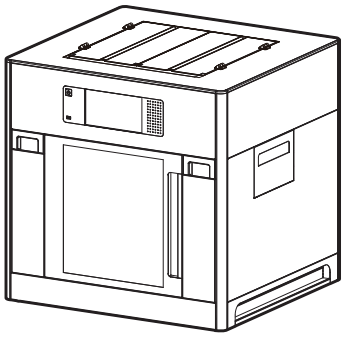

3D Printer

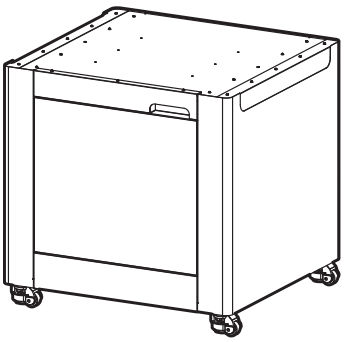

Table

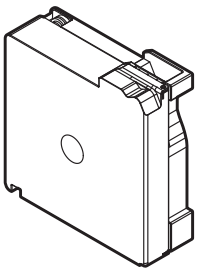

Cartridge

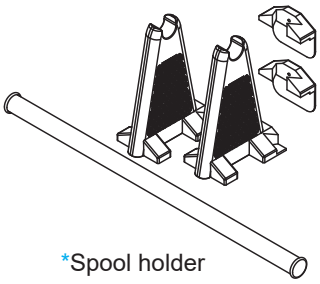

*Spool holder

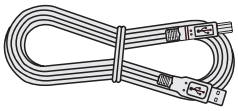

USB Cable

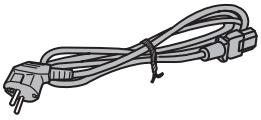

Power Cable(3EA)

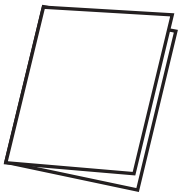

Reference Guide

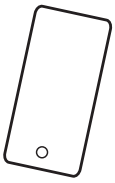

Z-offset Calibration Sheet(2EA)

Scrapper

Spring Nozzle Cleaner

USB Drive

Tube for Cleaning(4EA)

Encoder Cleaning Brush

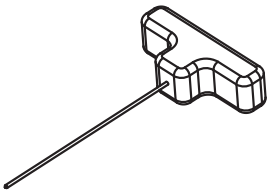

Nozzle Cleaner

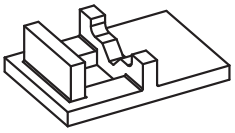

Nozzle Cleaning Pads (5EA for replacement)

*Included only on 7X model.

⚠ Warning

- **The blades of the scrapper can be very sharp. Please be cautious. Please do not use for other than removing printables.**
  Please do not touch the blade of the scrapper.

3. Understanding the Device Parts

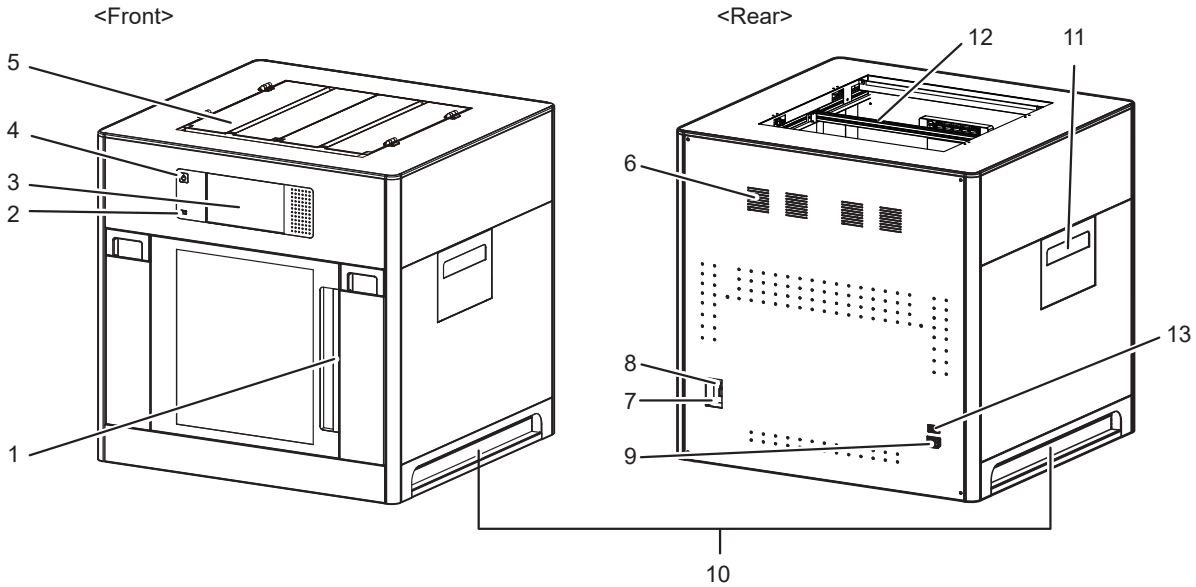

No.	Part Name	Description	
1	Front door handle	A handle to open the front door.	
2	USB port	Connect USB flash drive containing printing information and print directly from USB flash drive.	
3	LCD Control panel	Screen used to control printer. ⚠ Caution – Usage of printer is recommended after removing the protection film on LCD control panel. If the film is not removed, the touch screen may not work properly.	
4	Power Button	Briefly press this button to turn on printer. Press and hold for 2 seconds to turn off the printer	
	Power Button Indicator	Lamp On	Power is On.
		1 second interval flickering	Can be turned on instantly. (power cable is connected) ⚠ Caution – If in case of not using the printer for long period of time, please unplug the power cord. – The lamp may flicker for a few seconds after the power cord is disconnected.
		Lamp Off	Inactive Mode. (Power cord is unplugged)
5	Top door handle	A handle to open top door.	
6	Ventilator fan(Odor removing filter)	Discharges heat from interior. Filters out odor created through printing.	
7	Lan Port	Allows a device to connect to a network using a LAN cable.	
8	USB Port	Used to connect printer to computer with a USB cable.	
9	Power port	Power cord connector.	
10	Carrying Handles	Handles to use when moving the printer.	
11	Extruder door	Door for maintaining extruder unit.	
12	Nozzle tube guiding rod	Prevents the nozzle tube from twisting.	
13	Main power switch (I /O)	Turn the power on or off by pressing “I” (ON) or “O” (OFF).	

<Interior>

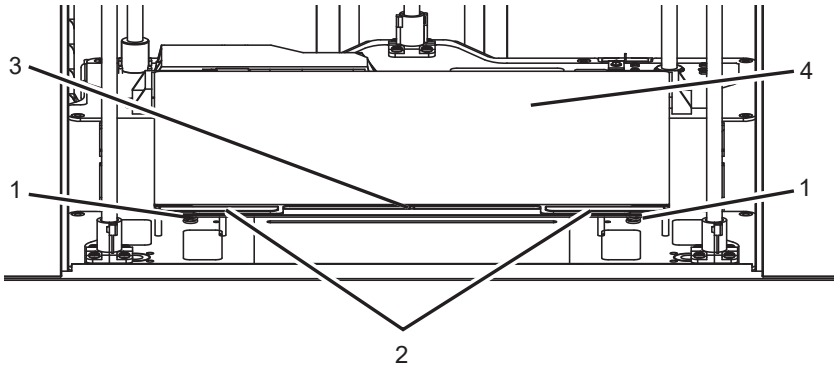

No.	Part Name	Description
1	Bed height adjustment Knob	Used to level the Flexible bed.
2	Removable bed handle	Used to assemble and dismantle Flexible bed
3	Bed heater	Heats the printables' bottom surface to stabilize it on the bed.
4	Flexible bed (bed sheet)	Seating space for printable. It has both sides of A and B. - Side A is a general purpose sheet for various materials. - Side B is recommended for printing materials which requires high temperature of the bed, such as ABS etc.

<Nozzle>

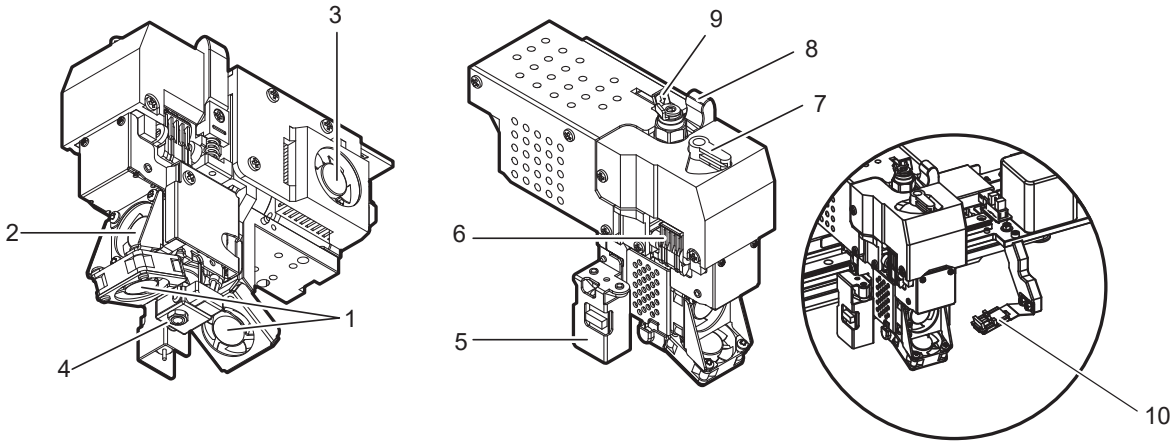

No.	Part Name	Description
1	Fan 1	Used to cool down models
2	Fan 2	Used to cool down the heat sink of the nozzle part
3	Fan 3	Used to cool down the nozzle motor
4	Nozzle	Used to print.
5	Sensor	Used to level the bed
6	Nozzle mount hook	Used to mount and fix the nozzle
7	Nozzle fixing handle	Used to fix the nozzle
8	Nozzle drive pressurization handle	Pressurizing handle to drive the filament
9	Depressurization handle lever	Used to depressurize the nozzle drive pressurization handle
10	Nozzle cleaning pads	These are used for removing foreign matters from the nozzle.

4. Installation(Product connection, Cartridge Setup and Software installation)

4.1 Device Connection

1 On the rear side of the machine, connect the power cable to the power socket.
Next, connect the power cable to the power outlet.

2 Press the power button, located on top of the machine.

3 After main menu is displayed on the LCD screen, install the cartridge (Refer to UI manual **"LOAD"**).

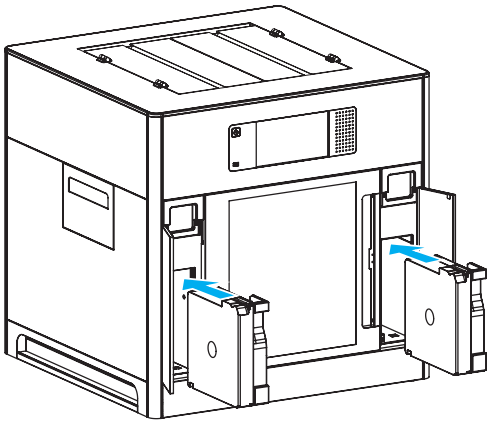

4 Connection to PC
1) Direct Connection: Connect one end of the enclosed USB cable to the back of the 3DWOX and the other end to the PC.
2) Network Connection: Refer to 2-34(Network) of the User Manual.

5 Plug USB flash drive in, and install machine drivers and Slicer program.

4.2 Program Installation

1 Start the installation of 3DWOX Desktop program by clicking on **"3DWOX Desktop.exe"** file in the enclosed USB.

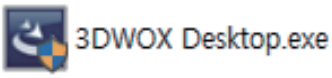

2 Install the additional files required by the software first.

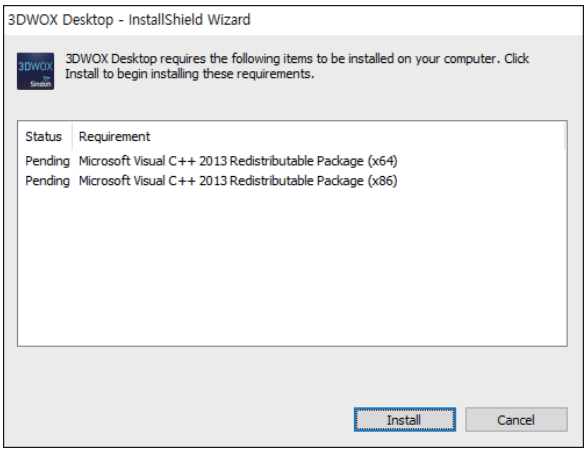

3 When installation of the file is complete, a pop-up window shows up as picture below. Press **[Next]** button to initiate the installation of 3DWOX Desktop program.

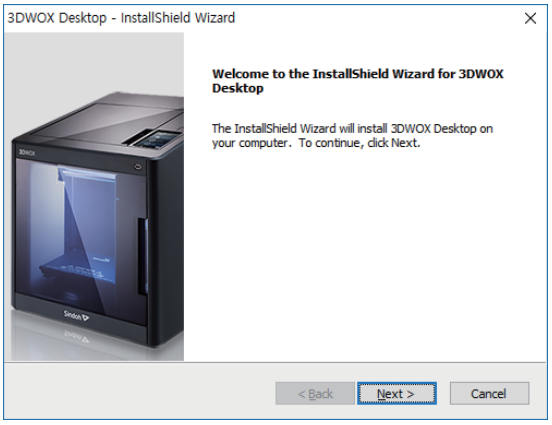

4 Choose the destination location of the file and press **[Next]** to proceed.

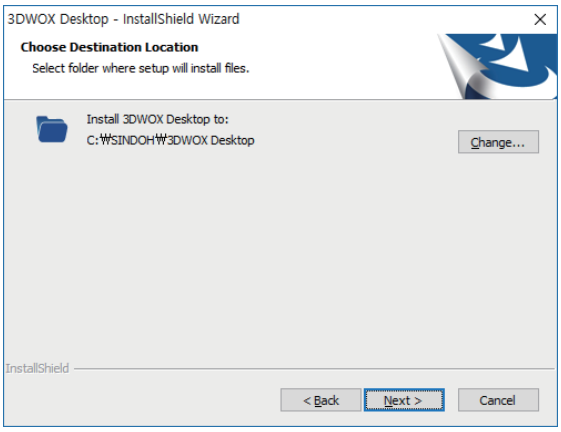

5 The file gets saved and the installation starts.

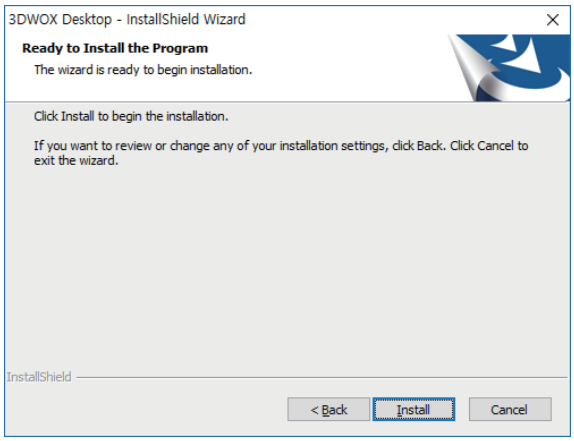

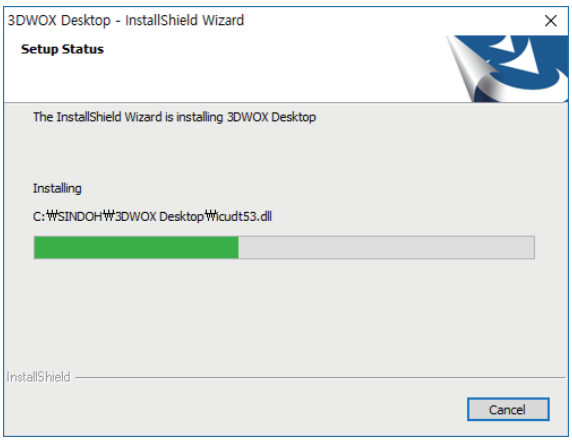
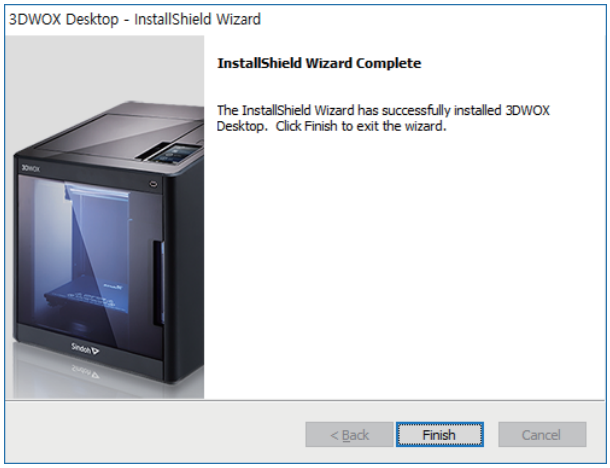
6 After all installation is complete, you can see that the **"3DWOX Desktop"** created on the desktop of your computer.