3DWOX 5X / 7X/ riZE 7XC
USER MANUAL

Maintenance

5

1. Machine Cleaning

1.1 Cleaning Case Maintenance

When the filament residue is filled in the cleaning case, use the “Setup - Cleaning Case” menu to clean the cleaning case.

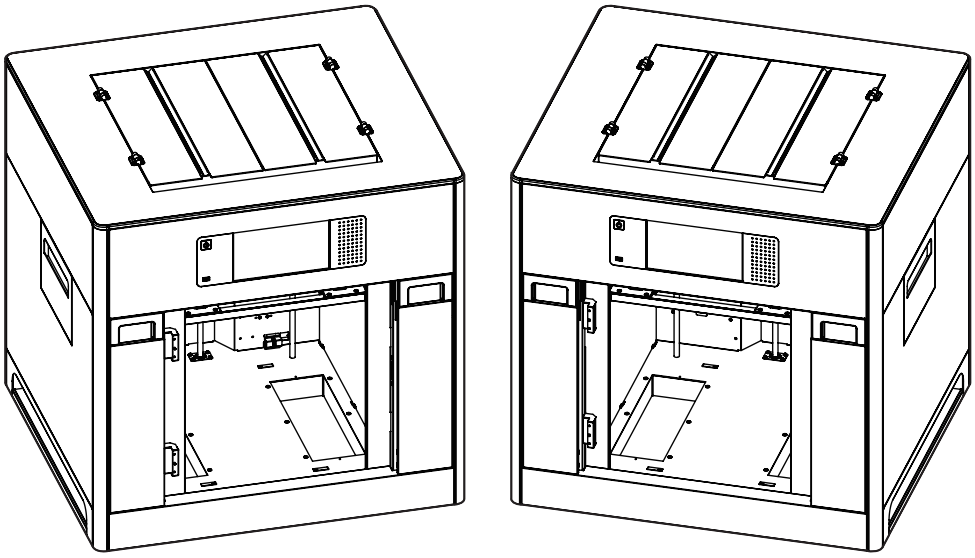

1.2 Printer Interior Cleaning

Over time, there will be a build up of filament residue within the printer.
If the residue goes into conveyor belt or fan wings, it can cause printer malfunction.
Please clean the inside of the printer regularly or right after a print job.

1.3 Periodical Inspection

Oil/Grease Inspection

During manufacturing grease/oil is applied to the gears.
After a period of time, grease and oil can dry and cause printer noises during operation.
At least once a month inspect the condition of grease and oil.
Especially, If printer begins to make noises during operation, immediately check if oil and grease are applied properly. If necessary contact service center for inspection.

1.4 Flexible bed and Nozzle Cleaning

Bed leveling may not work properly if there are filament residues or foreign matter on the top of the bed, and impurities may get on the printing object, which may affect the printing quality. Regularly clean the top of the bed and the end of the nozzle tip.

If the attaching force of the side A bed sheet is reduced when printing the PLA material object, rub it with sandpaper(#400 - 600), and wiping with alcohol.

1.5 Cleaning the inside of the Nozzle

The leftover in the nozzle interferes with filaments transfer. This interference can cause problems with printing and filament loading.
The leftover makes the printing filament uneven or clogs the nozzle.
Once melted, the filament can have different properties from the original.
If the leftover in the nozzle is repeatedly heated / cooled, the properties will be changed.
The changed leftover is harder to pull out, and easily stacked in the nozzle.
Therefore, it is recommended to clean the nozzle regularly if you want to use nozzle for a long time.
Nozzle cleaning is recommended when replacing it to another material of filament. This is because each material has different properties.
Especially, be sure to clean the nozzle before and after using PVA(PVA+) or FLEXIBLE.
Please follow the instructions below when cleaning.

1 Pull the lever on the right side of the nozzle and then the top lever to the direction of the arrow to lock the lever.

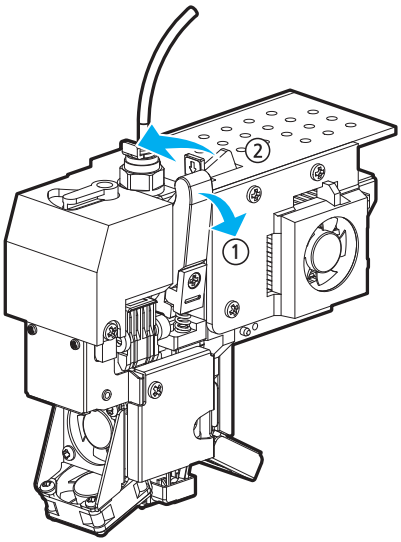

2 Remove the snap ring from the nozzle.

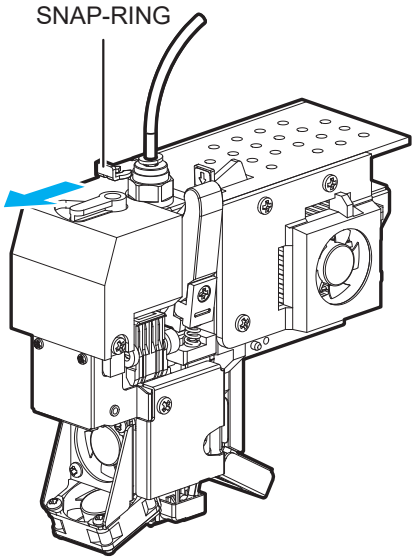

3 Remove the tube from the nozzle..

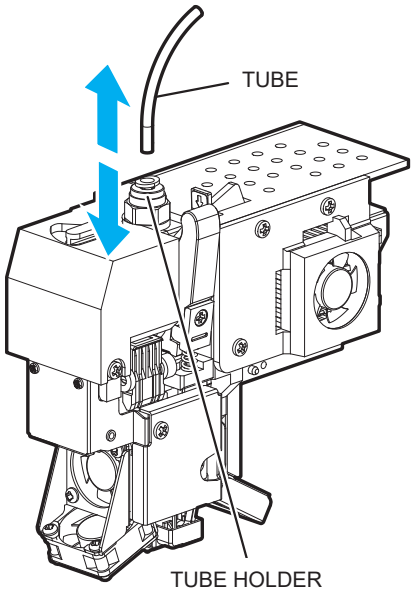

4 In the home screen, press the **[Settings]-[Nozzle Control]-[Nozzle Cleaning (Manual)]** buttons to access the nozzle cleaning menu.

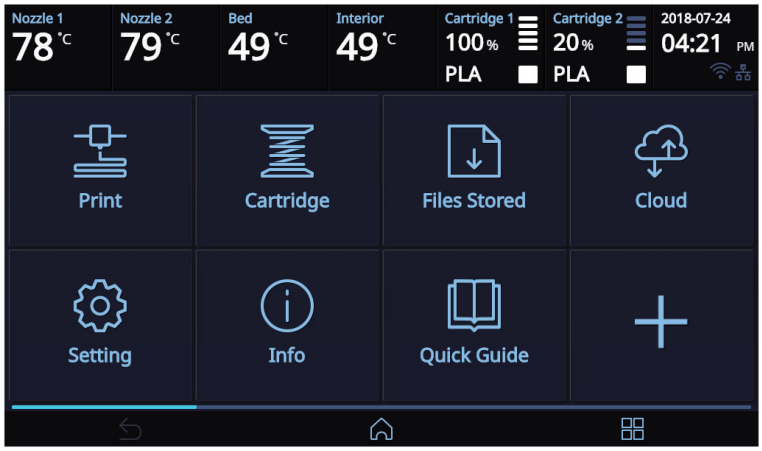

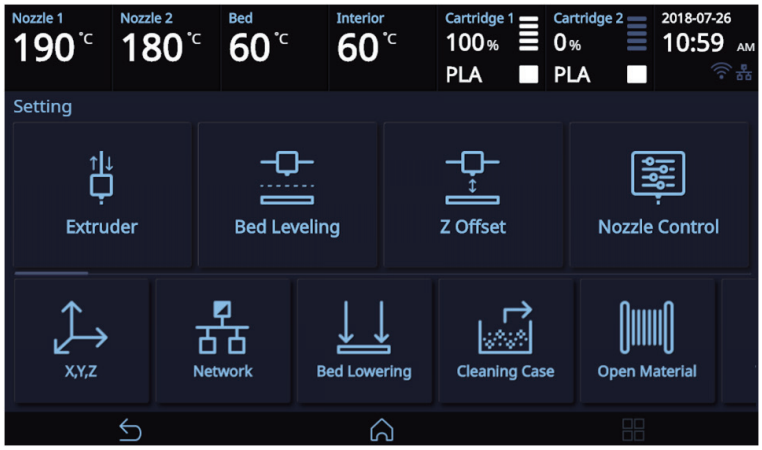

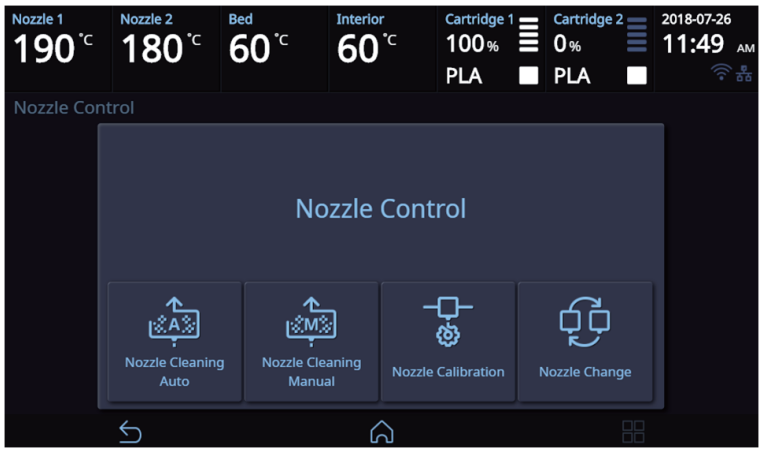

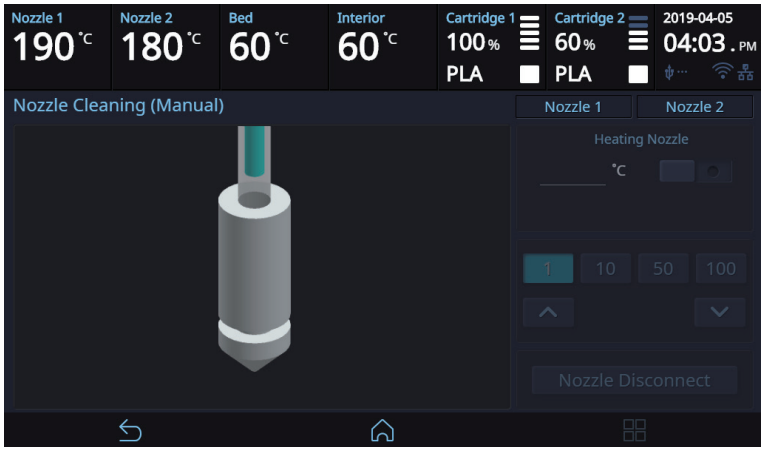

5 After positioning the nozzle in the center, insert the enclosed Tube for Cleaning into the nozzle.

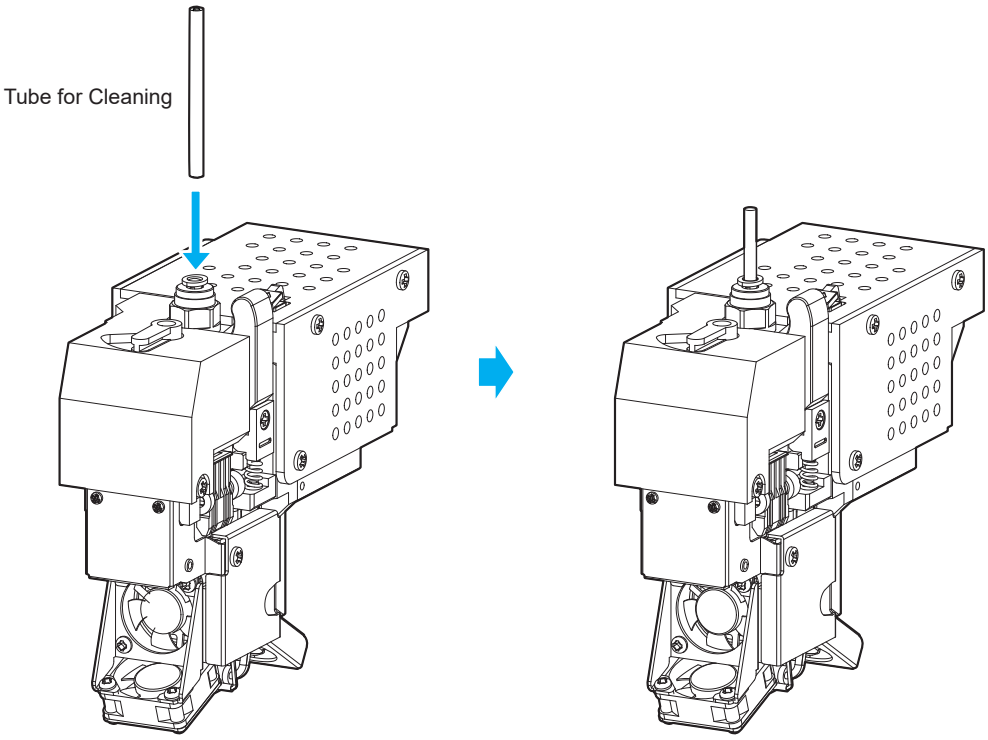

6 Enter the temperature and press the **[OK]** button. Press the heating nozzle button to set the temperature of the nozzle. Once the target temperature is reached, put a PLA filament into the tube and make it come through the nozzle.

Note

- Use a white PLA filament longer than 50cm for cleaning.
- Use a white PLA filament to distinguish dirt from the nozzle easily.
- Filaments have different characteristics based on their colors. If you pull out a filament other than the white one, it may break inside the nozzle.

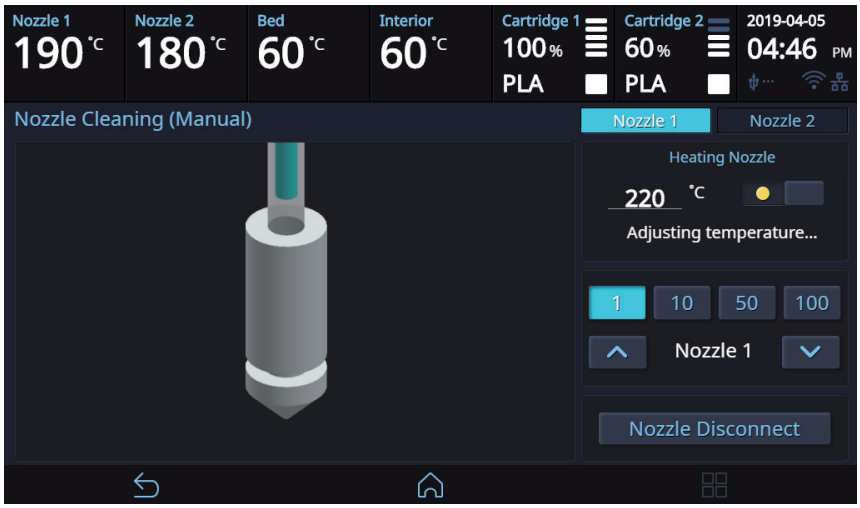

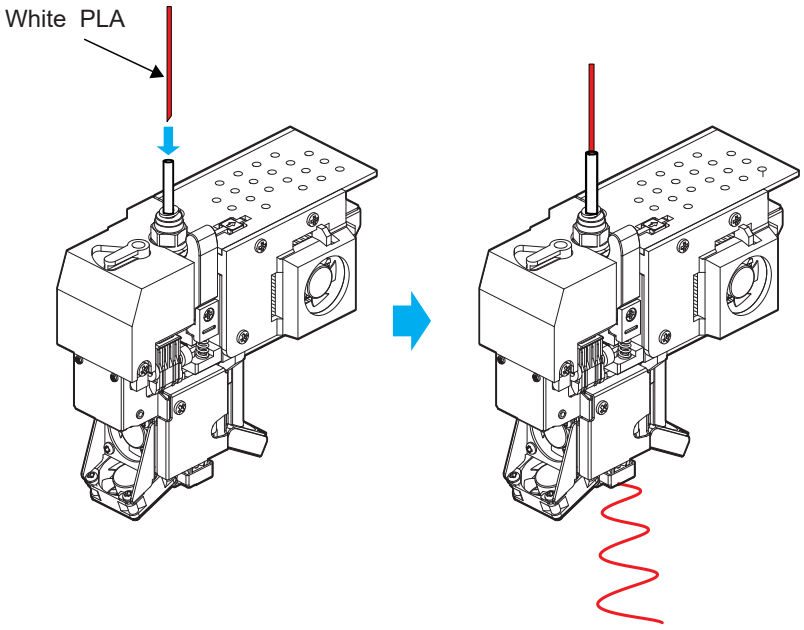

7 Remove the tube for cleaning and then pull out the PLA filament.

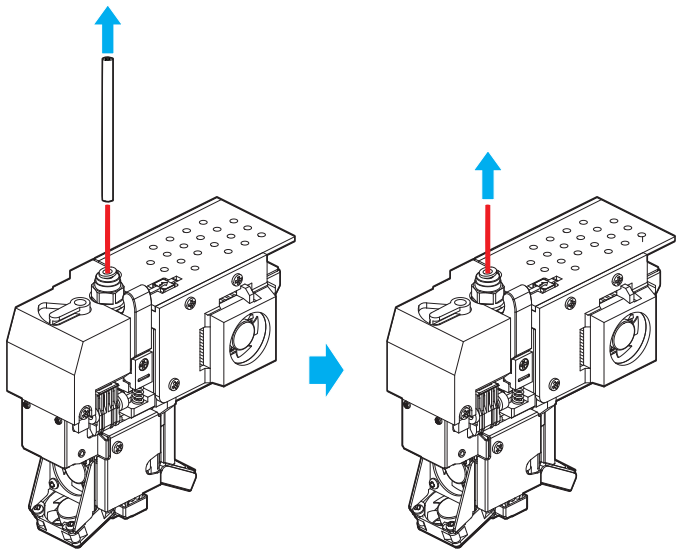

8 Press the **[Disconnect Nozzle] - [Disconnect]** buttons to remove the nozzle.
As shown in the image, insert a nozzle cleaning tool into the top hole to remove dirt.

⚠ Caution

- **When you pull out the filament, if you can not pull it out well, please heat the nozzle after removing it.**

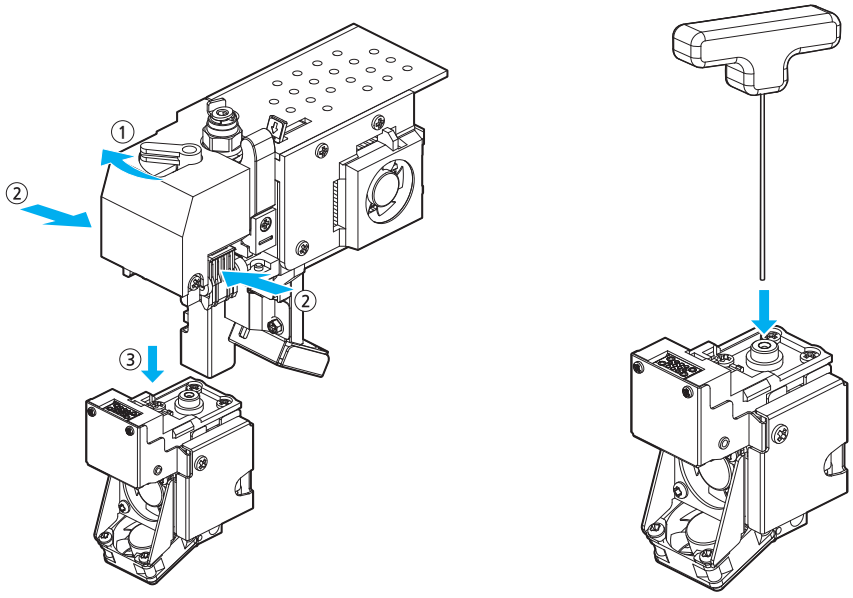

9 Remove the nozzle cleaning tool and reassemble the nozzle. Assemble the nozzle and then press the **[Connect]** button in the UI to reconnect it.

Once connected, heat the nozzle again, as explained in Step 6.

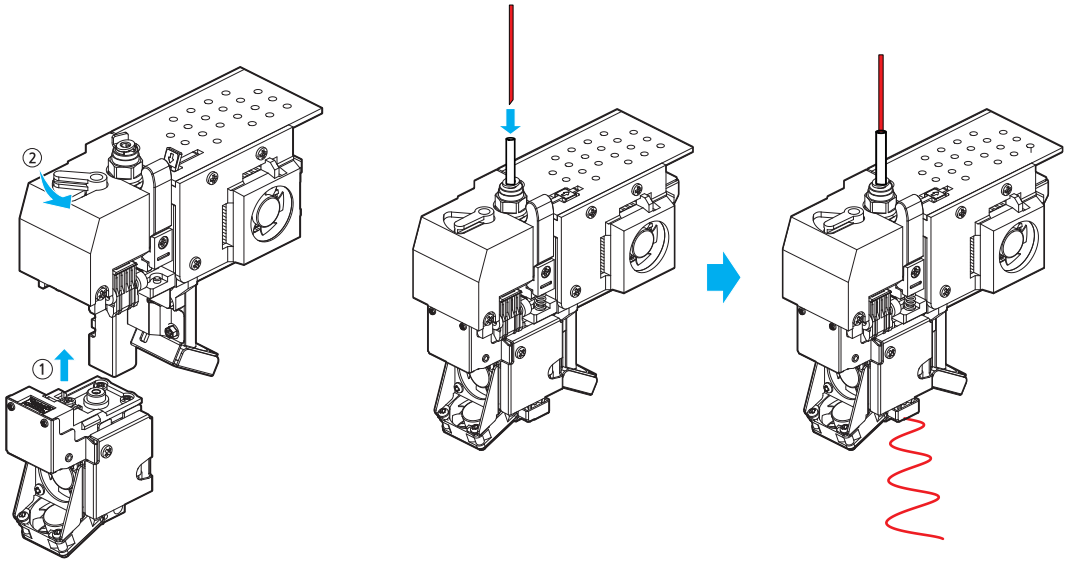

10 Press the home button in the UI to lower the temperature of the nozzle. Slowly push the PLA filament until the nozzle temperature is 180 °C

11 If the nozzle temperature is between 80 ~ 90 ° C, remove the tube and pull out the PLA filament.
(If the PLA filament is disconnected inside, retry extruder mode and repeat the each procedure from step 5.)

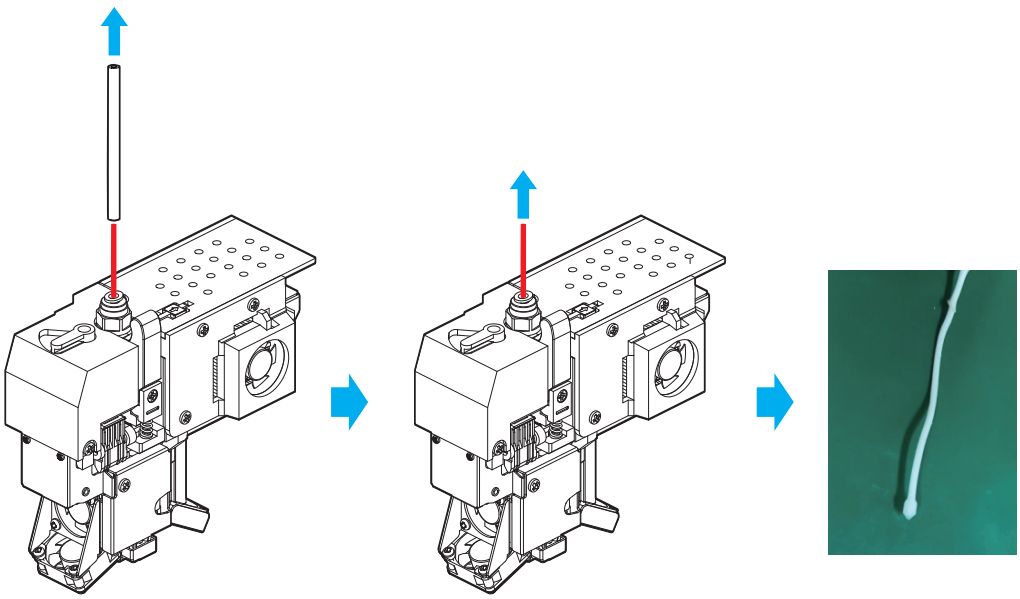

12 Repeat from step 3 until the filaments are free of contaminants as shown below.
If cleaned filament comes out with no contaminants as shown in the figure on the left below, the nozzle cleaning is complete.

Cleaned Filament

Contaminated Filament

13 Assemble the tube and the snap ring in reverse order from step 3 to step 1, and then turn the lever to its original position.

⚠ Caution

- **Make sure to place the lever to its original position since this may affect the print quality.**

14 Check whether the filament is extruded properly from the **[Setting]-[Extruder]** menu.

Note

- Refer to P.2-19 “Extruder” for the details.

❖ USING NOZZLE CLEAN TOOL

If the filament does not come out of the nozzle well in step 5, proceed as follows.
Once you have completed the steps below, proceed to step 5 again.

❖ Using Nozzle Spring Pin

If the filament does not come out of the nozzle even though the nozzle cleaner is used, use the nozzle spring pin to drill the nozzle inlet.

In the nozzle cleaning (manual) menu, with the nozzle heated, insert the nozzle cleaning spring from the nozzle inlet side and pivot it from side to side.

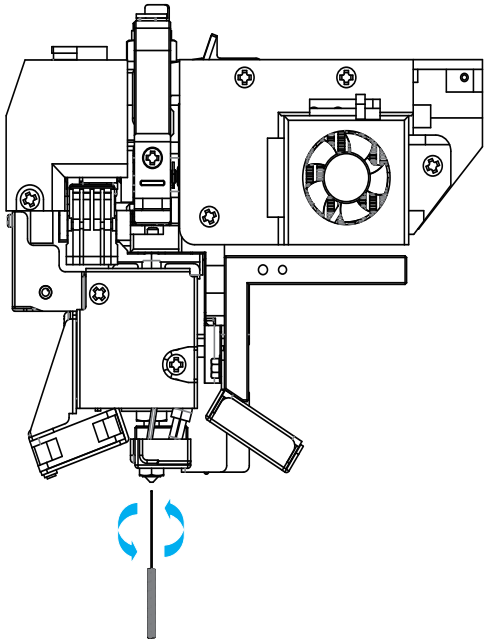

⚠ Caution

- **Be careful. It may cause burns.**
- **The tip of the nozzle may be hot. Please wear it with heat-resistant gloves.**

1.6 Nozzle Tip Cleaning

1 In the home screen, press the **[Settings]-[Nozzle Control]-[Nozzle Cleaning (Manual)]** buttons to access the nozzle cleaning menu.

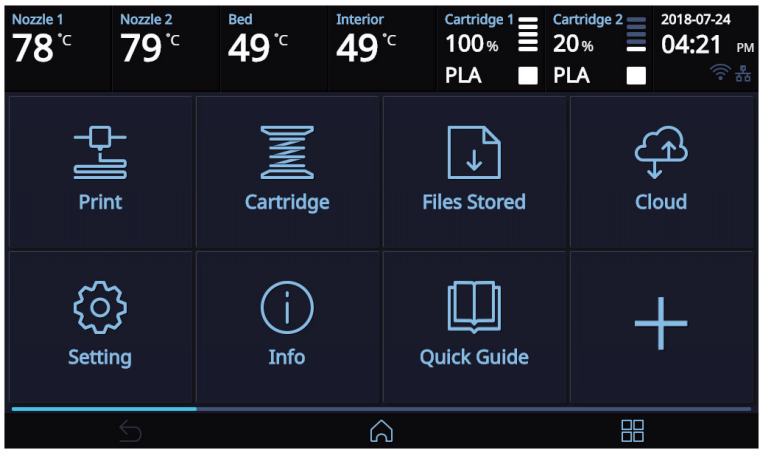

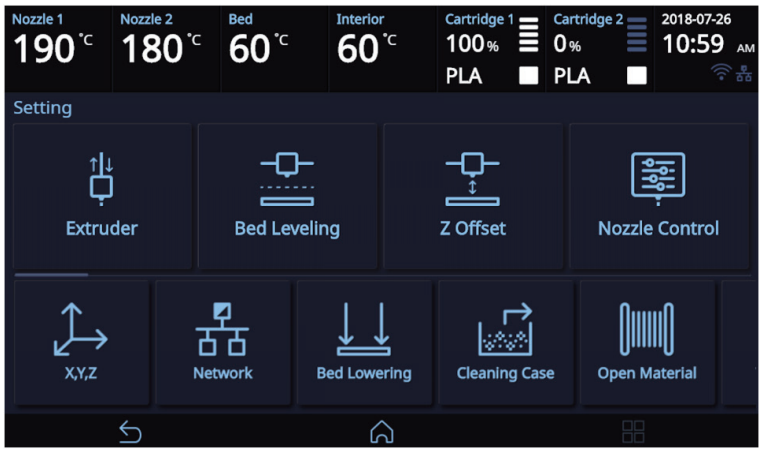

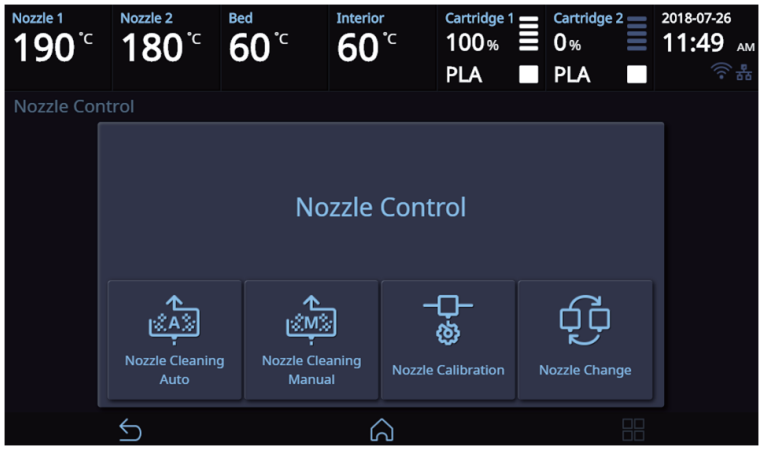

2 Press the **[Heat Nozzle]** button, and center it once the nozzle reaches the target temperature.

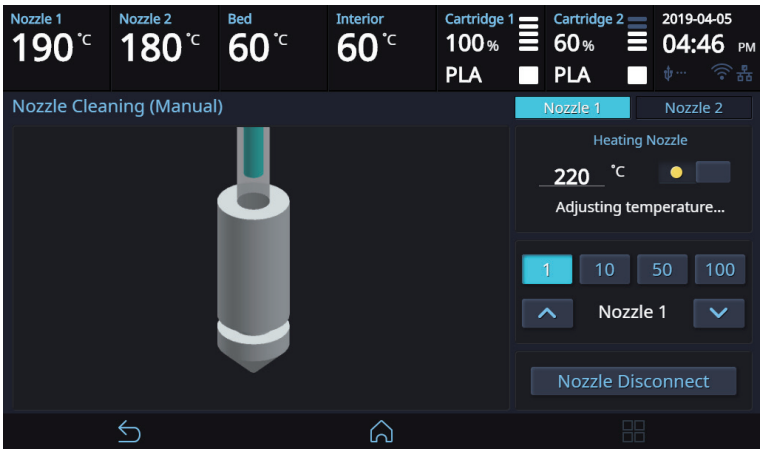

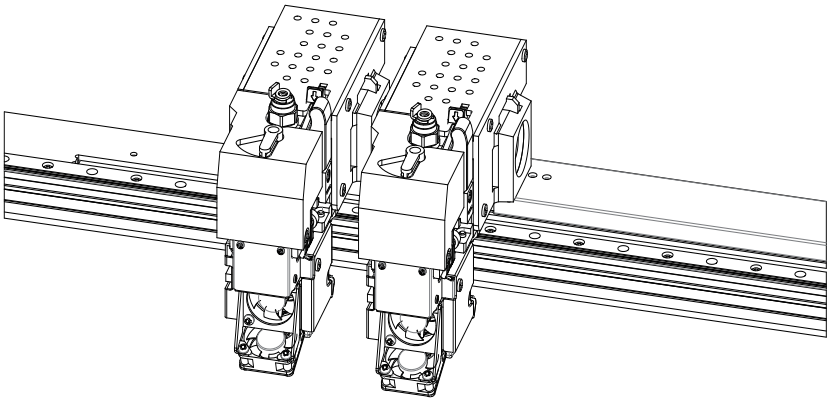

3 Wipe the tip of the nozzle with cotton or leather cloth in the direction shown below.

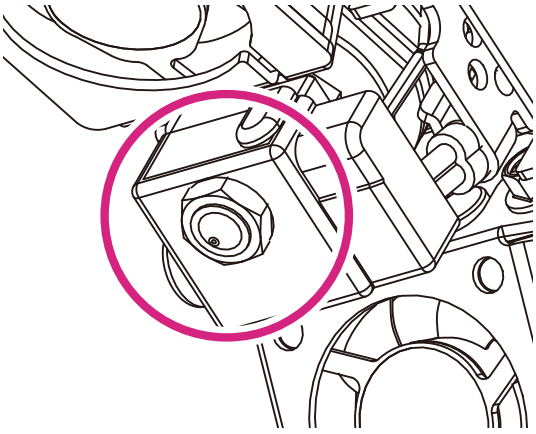

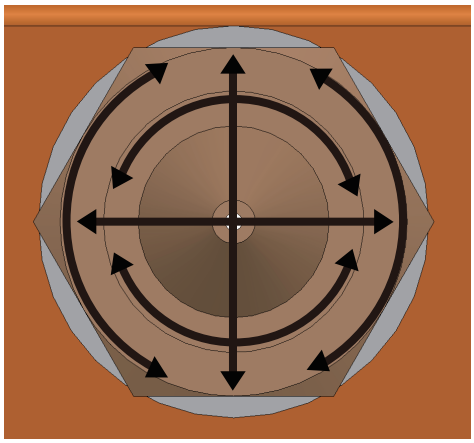

⚠ Caution

- **To prevent burns, wipe the nozzle tip by folding the cloth several times.**
- **Be careful not to damage the silicone adhesive between the nozzle and the silicon cap.**

2. Error Message and Solutions

Message	Description	What To Do
Booting Please wait until booting is complete.	Message means on the first boot user must wait until the booting is finished.	Once the boot up process is over and machine is ready, this message disappears automatically.
EC 301, 302, 303, 304, 305, 306, 308, 351, 353, 355	There is a problem with the nozzle temperature sensor or heater	If the problem persists after rebooting the printer, request for A/S.
EC 311, 312, 314 Please Reboot Machine.	There is a problem with the leveling.	Check the bed surface for any foreign substance, and remove any substance that you may find. Reboot the device and level it or request for A/S.
EC 321, 324 Please Reboot Machine.	There is a problem with the the heat sink fan of the nozzle or the nozzle motor fan.	Check if any foreign substance hinders the operation of the fan, and remove any foreign substance that you may find. If the problem persists after rebooting the printer, request for A/S.
EC 325, 326 Please Reboot Machine.	There is a problem with the output cooling fan.	Check if any foreign substance hinders the operation of the fan, and remove any foreign substance that you may find. If the problem persists after rebooting the printer, request for A/S.
EC 354, 357, 358, and 359	There is a problem in the power supply of the bed heater or the CTL board of the heater.	If the problem persists after rebooting the printer, request for A/S.
EC 391, 392, 393, 394	Cooling Fan Errors	Contact us for A/S if the errors still occur after rebooting the printer.
EC 407, 408, 409	G-Code File Error	If you press **[OK]** button, the alert pop-up will be closed.
EC 500, 501, 502, 503	The X1, X2, Y, or Z axis motor has a problem; that is why it cannot move to the home position.	Check the bed and the nozzle for any foreign substance.
Notification 401, 601	Filament is not transferred properly.	Follow the directions listed in the “3.5 Solution for EC 401” section.
Filament is exhausted. Filament break has been detected.	Appears if the filament of the cartridge is exhausted or broken.	Following the instructions on the LCD, first clean any filament debris, then install and load a new cartridge.
Notification 403, 411, 412, 413, 414, 415 and 417	The filament was not loaded properly.	Remove the cartridge according to the UI instructions, and then remove the filament.
Notification 404, 421, 422, 423 and 424	The filament was not unloaded properly.	Remove the cartridge according to the UI instructions, and then remove the filament.
Notification 431	The printer does not recognize the cartridge's smart chip.	Check if the cartridge has a smart chip, and re-install it.
Notification 432	The printer recognizes the filament but not the cartridge.	Press the **[OK]** button to unload it, and then re-install it.
Notification 433	Message will appear if there are more than 5% difference between the cartridge quantity and recorded usage levels.	Replace Cartridge.

Message	Description	What To Do
Notification 434	The filament has already been consumed.	Replace the smart chip. (Check if the smart chip was replaced with the filament.)
Notification 438, 439	Cartridge Smartchip Error	Smartchip Replacement Required. (Check if the smartchip was replaced as replacing the filament.)
Notification 447	This error occurs if a newly loaded filament material differs from the previous printing filament material.	Insert the same filament material type with the one previously used into the cartridge.
Notification 461 and 462	The printer does not recognize the extruder's sensor of pressurization controller.	'Refer to the "Cautions for Using the Device" section to check the state of the extruder located at the side of the device.
Notification 481	Unloading was not successful.	Press the **[OK]** button to restart unloading.
Notification 471, 472, 473, 476, 482, 483, 484, 488	Remove the remaining filament because of a problem during loading/unloading.	Follow the UI instructions in removing the remaining filament. (Refer to P.5–5.)
Notification 487	Remove the remaining filament because of a problem during loading.	Remove any filament located outside of the cartridge. (Refer to the label on the cartridge.)

3. Problems and Solutions

3.1 In Cases where Filament is Cut Between the Extruder and Nozzle

1 Remove the snap ring from the fitting of the nozzle part and then the tube.

→ Move the filament toward the nozzle to push out the broken part in the extruder operation mode.

→ Remove all broken parts, install the nozzle to the tube, and install the snap ring.

※ Push in the tube until the black section of it is fully inserted.
After installing the snap ring, push in the tube slightly more (by 1.5 mm).

→ Transfer the filament toward the nozzle and make sure that it comes out of the nozzle in the extruder operation mode.

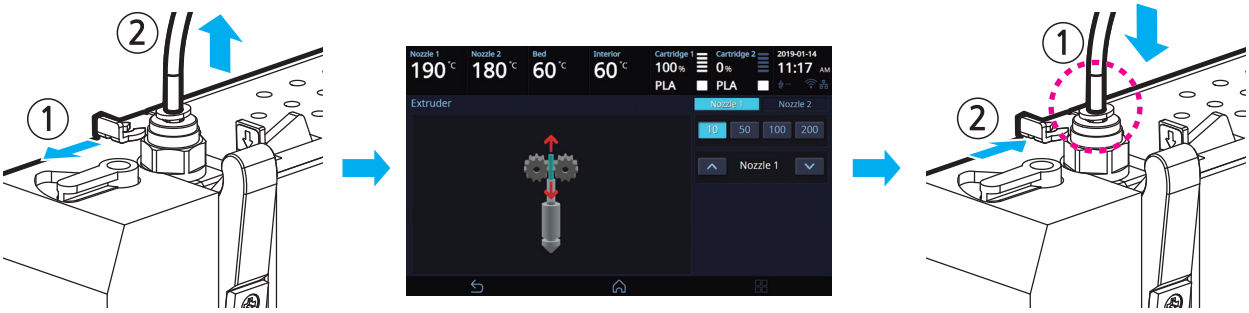

3.2 When Filament End is Visible Outside the Cartridge After Unloading

1 Pull out the filament approximately 50~60cm, and cut the filament.

Note

Cutting Filament Tip

- Cut the filament in the way the cut end is sharp as shown below. It makes the filament run through easier.

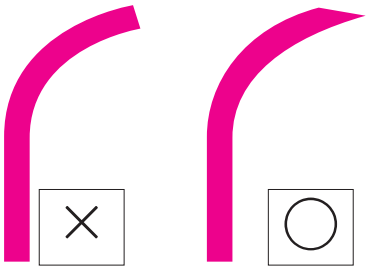

2 Like the image below turn the gears and the filament will retrieve back to cartridge. Insert until filament is invisible, reinstall the cartridge into the printer and activate LOAD.

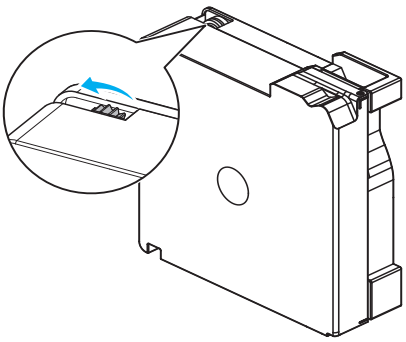

3.3 Solution for Notification 401, 601

The Notification 401, 601 error code occurs if the filament was not correctly transferred.
There are many possible reasons why the filament was not properly transferred. To solve this issue, follow the instructions below.

1. Press the **[OK]** button to move the printing screen. Then, press the [Pause] button followed by the [Function] button located on the top of the screen.

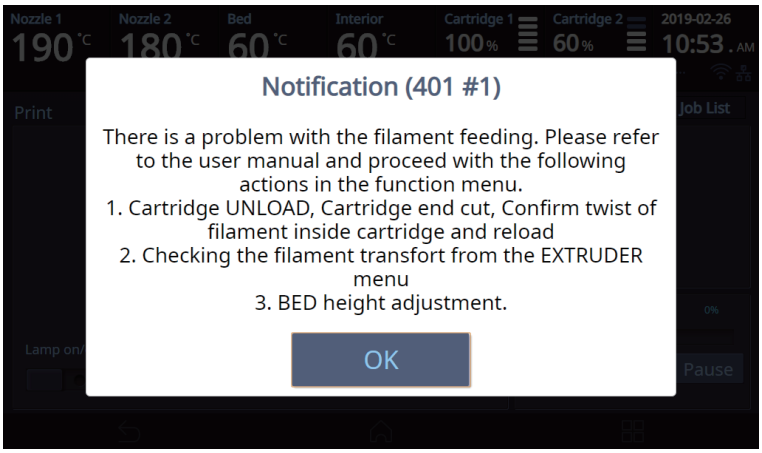

2. Select and unload the cartridge with the same number that the notification 401, 601 was detected.
   → Remove the cartridge from the printer.
   → Open the cartridge and check if the filament is tangled.

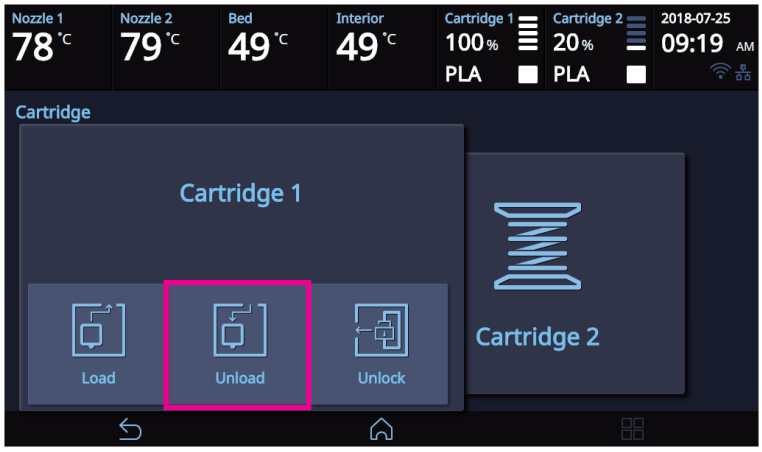

3 Select the **[Extruder]** menu.

➞ Wait until the nozzle's temperature reaches the target temperature.

➞ Operate the extruder to insert the filament by 50 mm.

(If the filament was not injected, repeat step 2 for two to three times. If this does not work, please contact our customer service hotline, and submit a video or image of this issue to a customer service representative.)

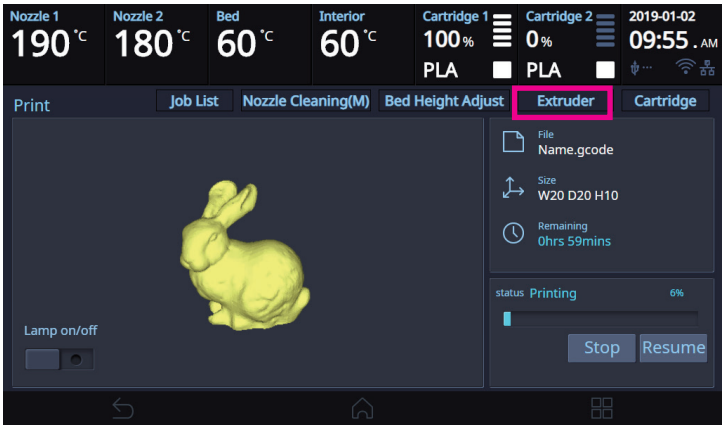

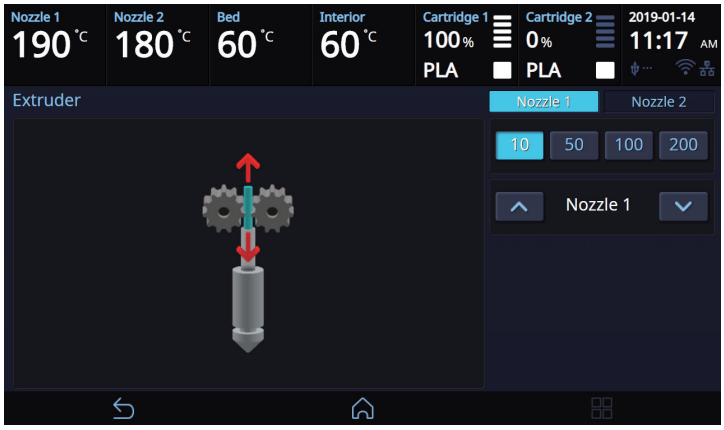

Note

- When the filament is normally extruded (when notification 601 occurs)
  - Remove the snap ring from the nozzle and remove the tube.
  - Insert the encoder cleaning brush into the tube holder and move it up and down about 10 times to clean it.
  - After cleaning, insert the tube again and assemble the snap ring.
    For details on how to remove and assemble the snap ring and tube, refer to "1.5 Cleaning the Inside of the Nozzle" in Chapter 5 of the User Manual.

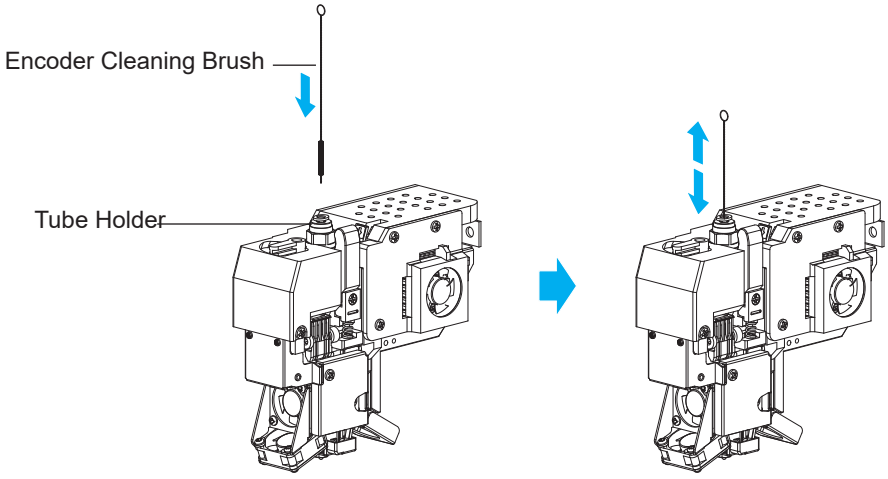

4 A persistent Notification 401, 601 error code may be caused by an insufficient space between the nozzle and the bed, which causes the filament not to be correctly transferred.
In such a case, select the [Bed Height Adjustment] menu to adjust the height of the bed so that there is adequate space between the nozzle and the bed.

※ You can also cancel printing and re-execute **[Setting]–[Bed Leveling]** to set the correct space between the nozzle and the bed.

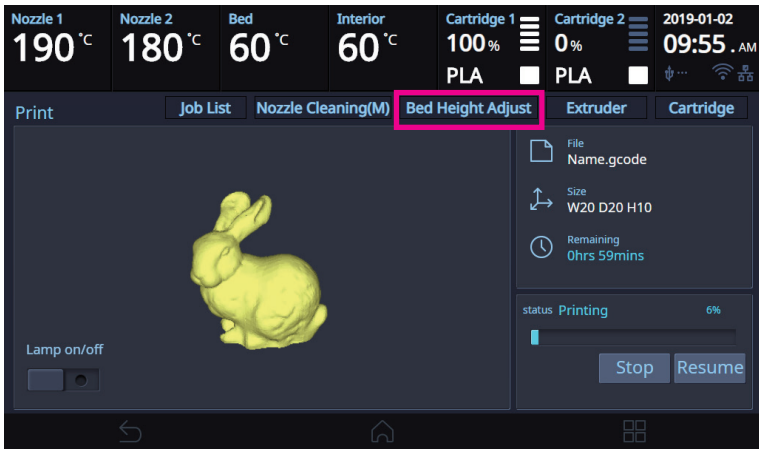

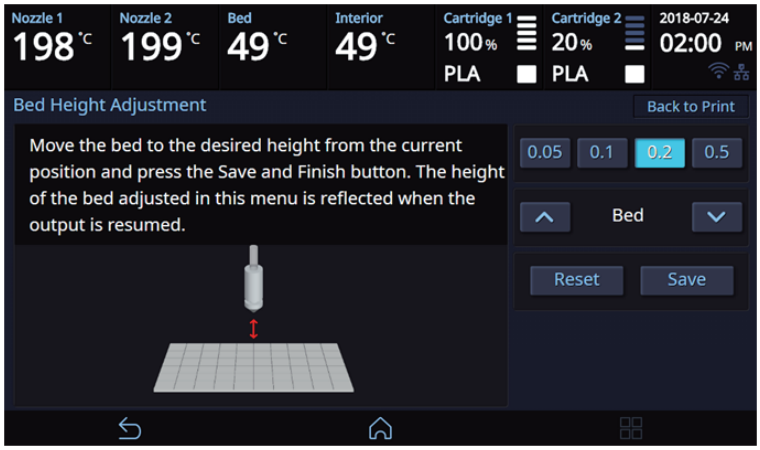

5 After finishing the response to Notice 401, 601 press the **[Resume]** button to continue printing.

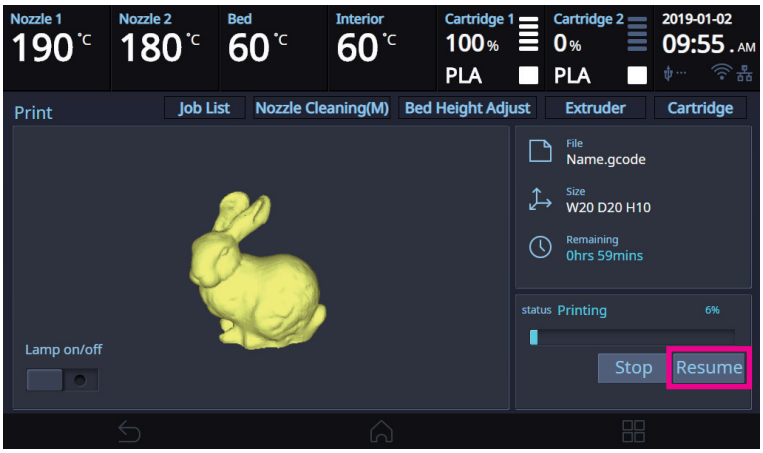

4. Replenishing Consumables

4.1 Bed Replacement

Removing Flexible Bed

Reference

- Please refer to P. 4-2 “1.1 Detaching Printed Output”.

Installing Flexible Bed

Reference

- Please refer to P. 4-2 “1.1 Detaching Printed Output”.

Note

- Small Scratches on the bed made during normal usage will not affect the print quality but if the bed sheet is ripped off or contaminated, the printed output may not adhere on the bed properly and should consider exchanging the bed to a new one.
- Bed sheet is a consumable.
- Please replace the bed sheet if models don’t get attached to it due to a significant scratch or defected parts of the bed.

4.2 Filter Replacement

Caution

- **Turn the machine power off before starting the replacement.**

Note

- It is recommended to exchange filter and nozzle together.
- Depending on environment, replacement interval may differ. If you smell odor from the filter, please replace the filter.

1 Open the top door.

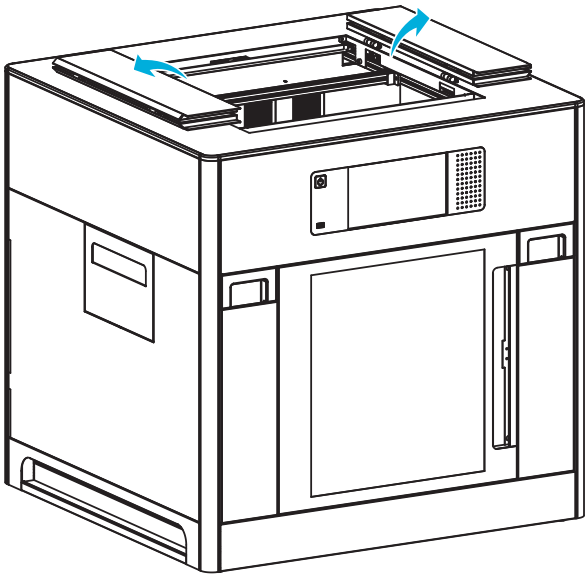

2 Pull the filter toward the direction of the arrow to remove it.

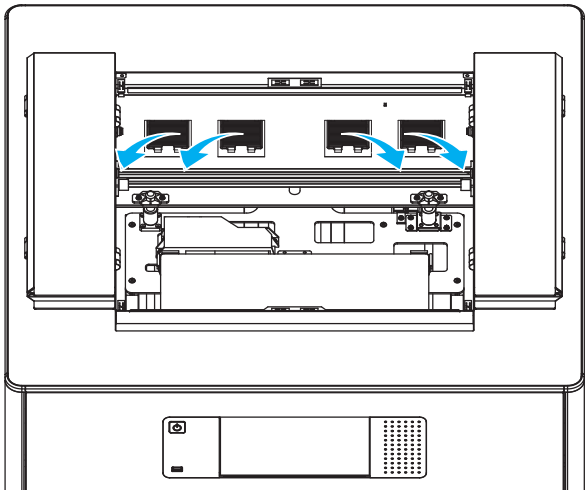

3 Install a new filter, as shown in the image.

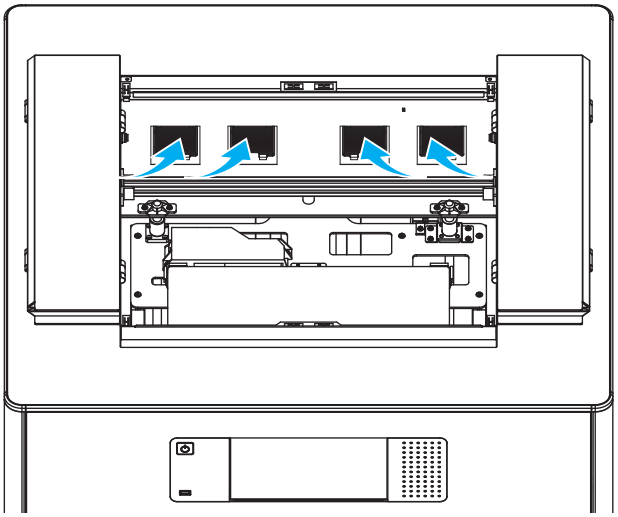

4 Close the top door.

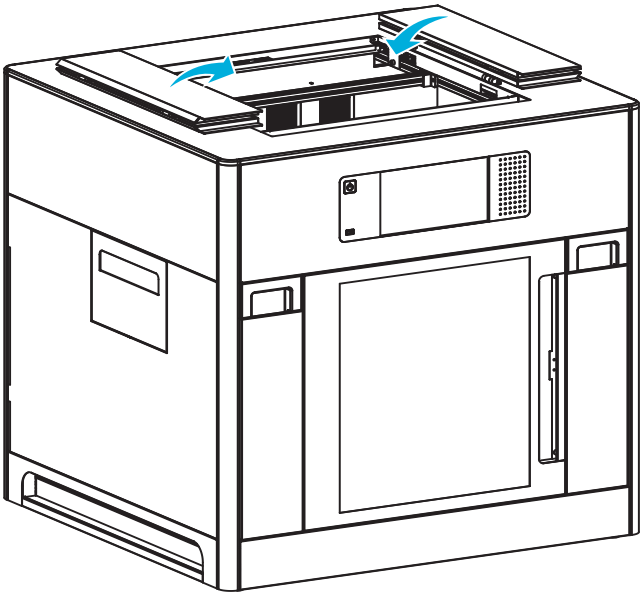

4.3 Cartridge Replacement

Replace cartridge when a cartridge is used up or a different color/material is needed.

1 Initiate Cartridge Unload.

Reference

- For details on cartridge unload, please refer to P. 2-7 “UNLOAD”

2 Please switch the cartridge first and then load.

Reference

- For details on cartridge load, please refer to P. 2-5 “LOAD”

Note

- When replaced with a different color, the previously used color may be seen in the beginning of printing.
  If the color is the only difference from the previous filament, it doesn’t affect the printing quality.
  Difference in material, however, may affect the printing quality.
  To fix problem, after changing cartridge, please run nozzle cleaning (Refer to P. 2-19 “NOZZLE CLEANING”) before printing.

4.4 Nozzle Replacement

In the home screen, press the **[Settings] - [Nozzle Control] - [Nozzle Replacement]** buttons to access the nozzle cleaning menu.

Caution

- **If the temperature of the nozzle is above 30°C, it may cause burns to a part of your body during replacement.**

1 Select a nozzle to replace. Select a nozzle to move it to facilitate operation.
Press the **[Disconnect Nozzle] – [Disconnect]** buttons to disconnect the nozzle.

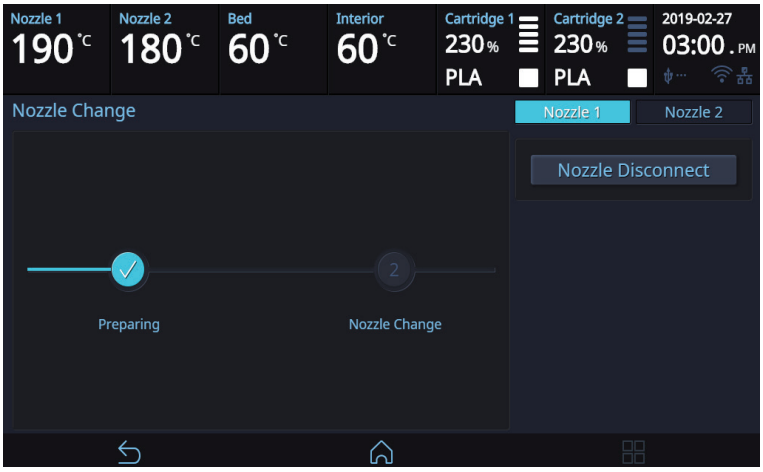

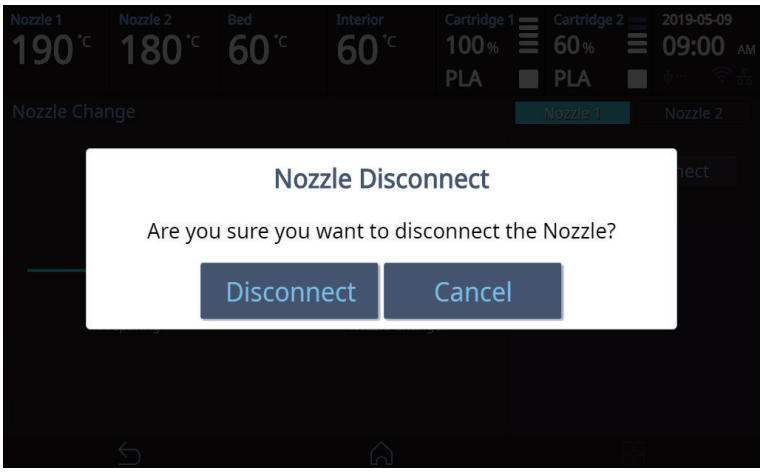

2 As shown in the image, turn left the nozzle fixing lever on top and then pull down the nozzle while pressing both hooks to remove it.

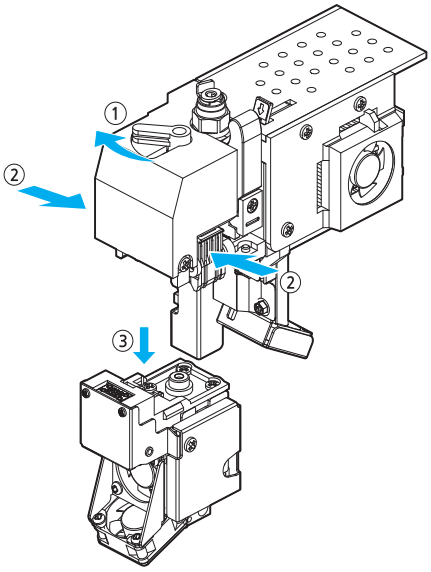

3 Install a new nozzle and then turn right the nozzle fixing lever on top.
Once the nozzle is installed, press the **[Connect]** button in the UI to reconnect it.

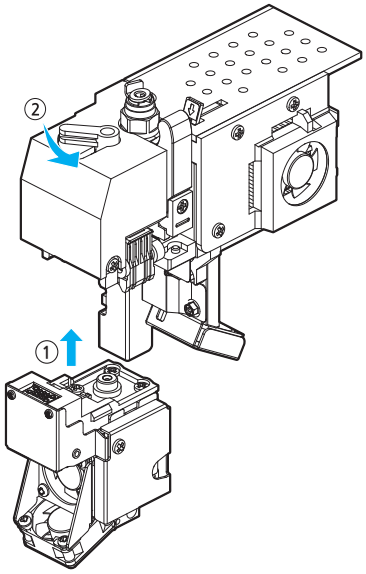

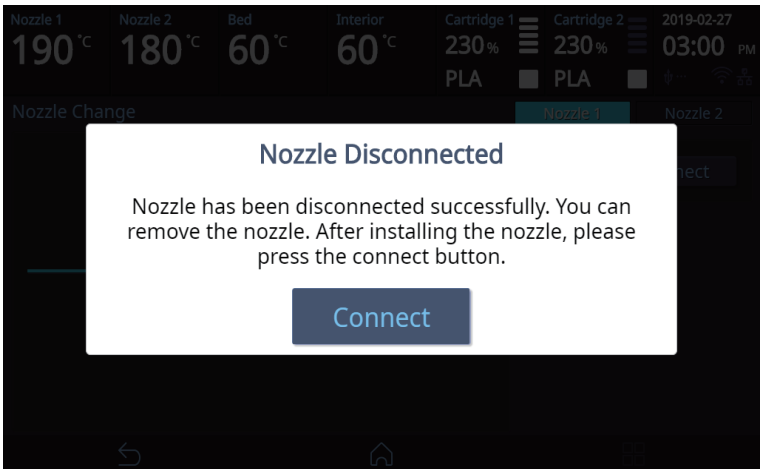

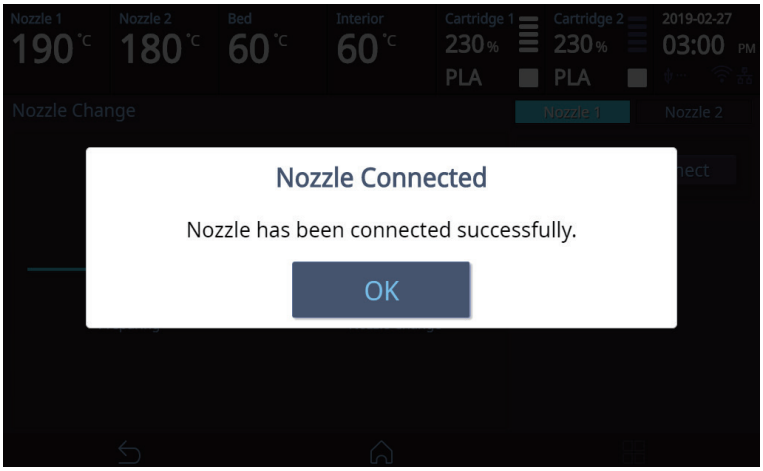

4.5 Nozzle Cleaning Pads Replacement

When the nozzle is not cleaned properly because the cleaning pad is damaged, replace the pad by performing the following procedure:

1 Hold the end of the pad, and remove it by pulling it hard in the arrowed direction

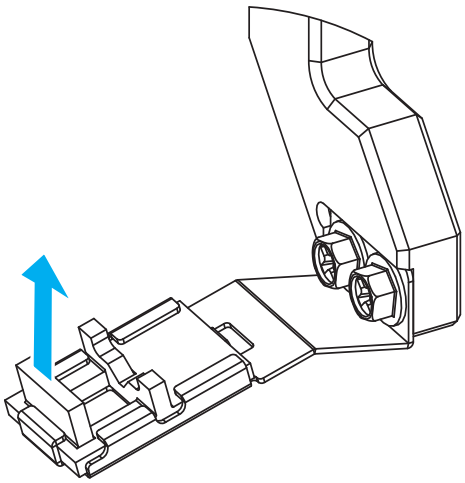

2 Match one end of a new pad as shown in the following figure, and push it in the arrowed direction.

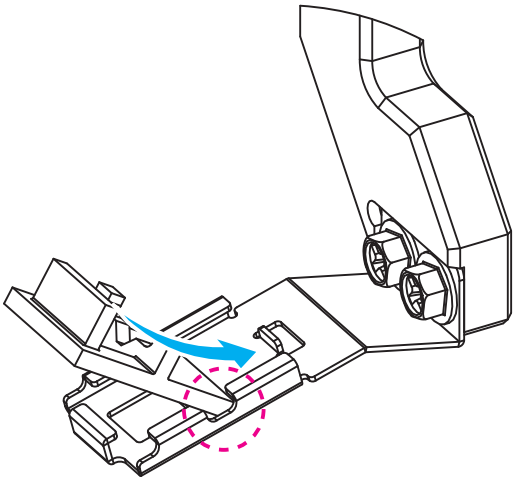

3 After inserting the pad, check that the pad is held by the hooks in three directions, as shown in the following figure.

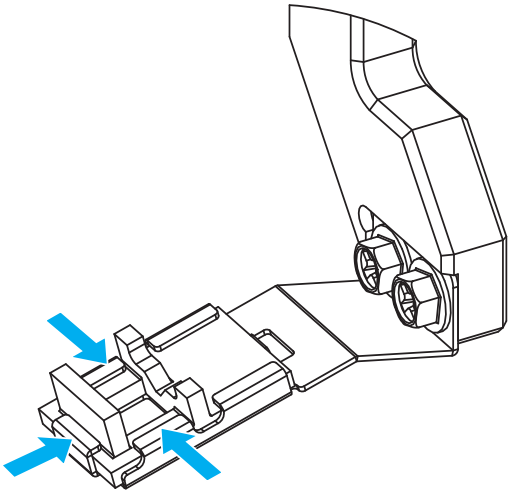

⚠ Caution

- **When replacing pads, be careful not to damage or deform adjacent parts.**

3DWOX 5X / 7X/ riZE 7XC
USER MANUAL

Appendix

6