S/W Update

This function keeps S/W of the machine up to date.
It checks the latest firmware through the network connection. Therefore, it won't be working if the network is not connected.

1 Press **[Slide Menu Bar]** from the Home screen.

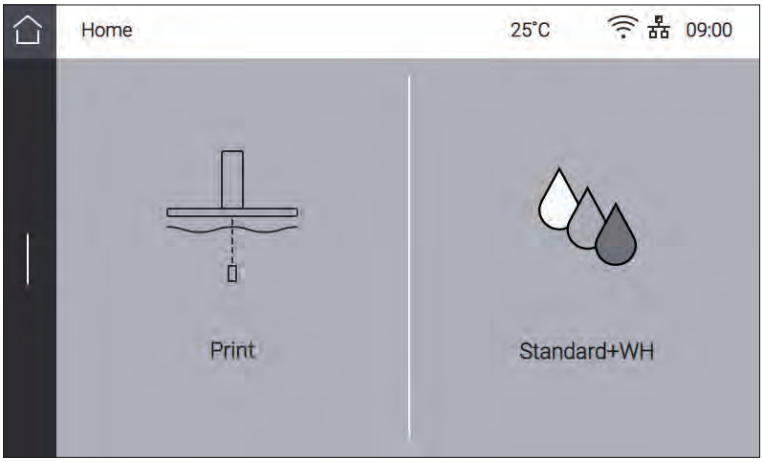

2 Press **[Setting]** from the Menu screen.

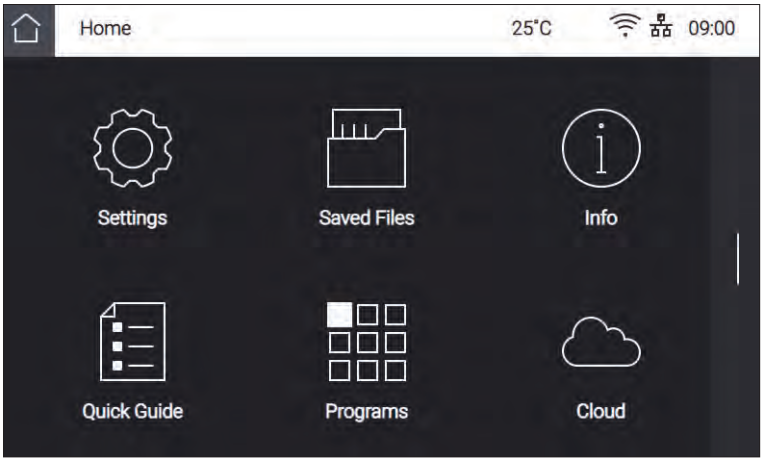

3 Swipe up the screen, and then select **[S/W Update]**.

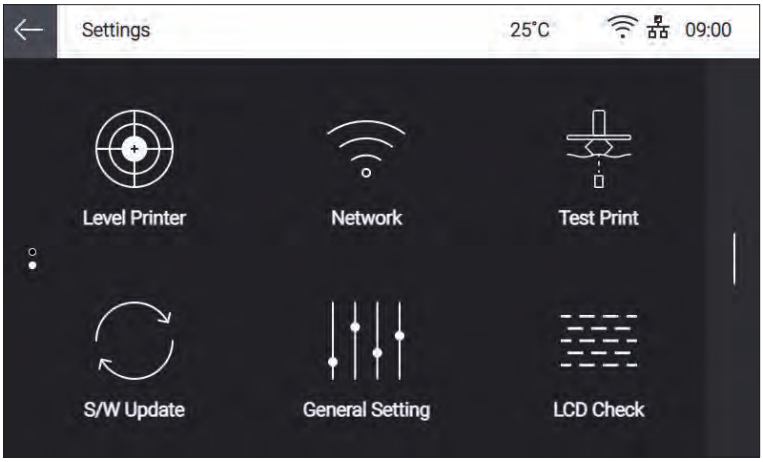

4 Confirm to proceed with the software update. Press **[Start Update]**.

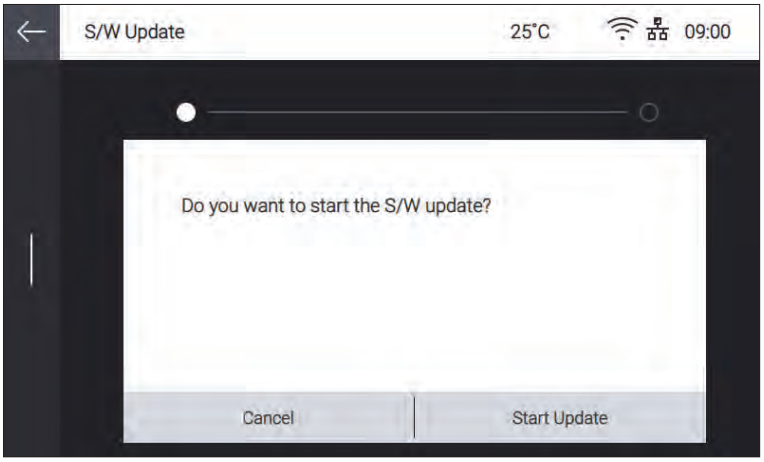

5 If there is a firmware update, the software update will start.
After the update is complete, press the **[Done]** button to reboot the machine.

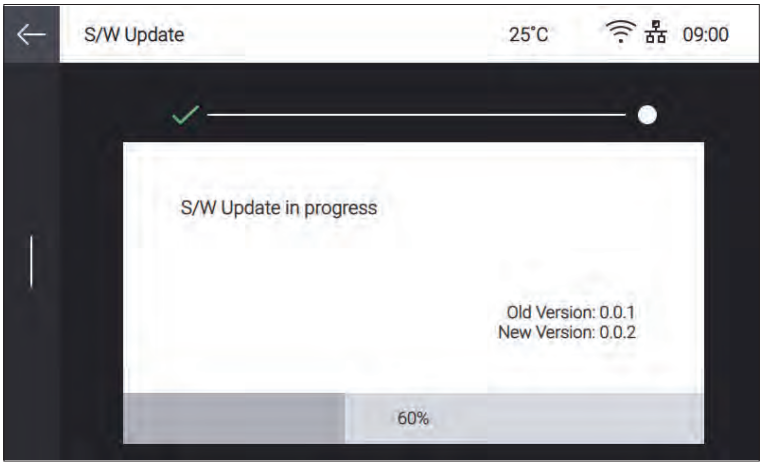

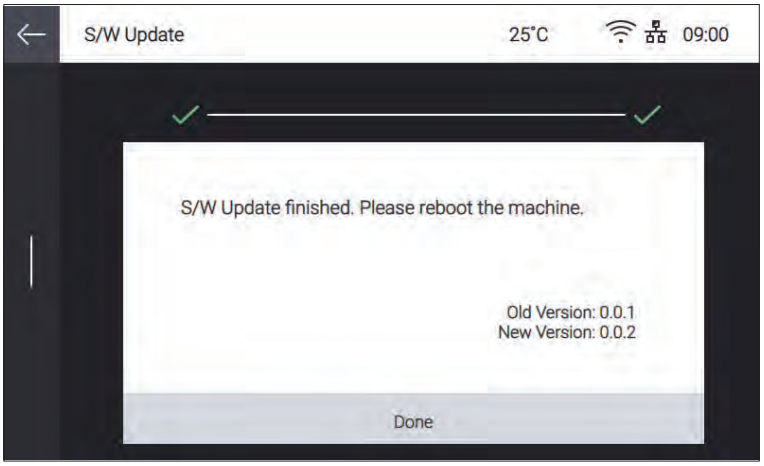

General Setting

This function allows users to change general settings.

1 Press **[Slide Menu Bar]** from the Home screen.

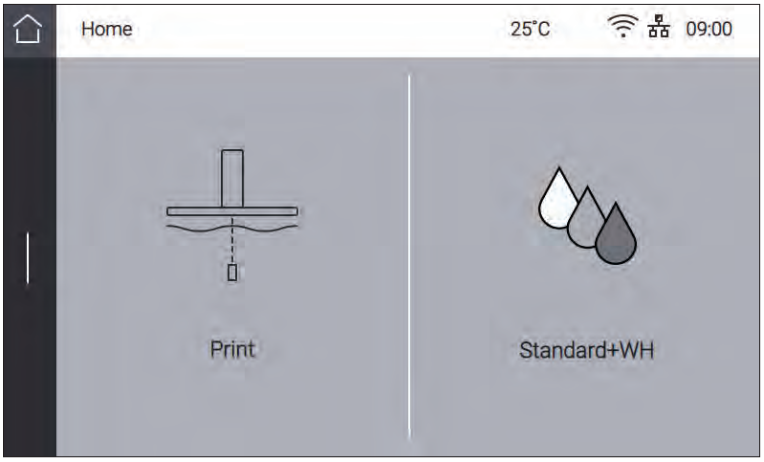

2 Press **[Setting]** from the Menu screen.

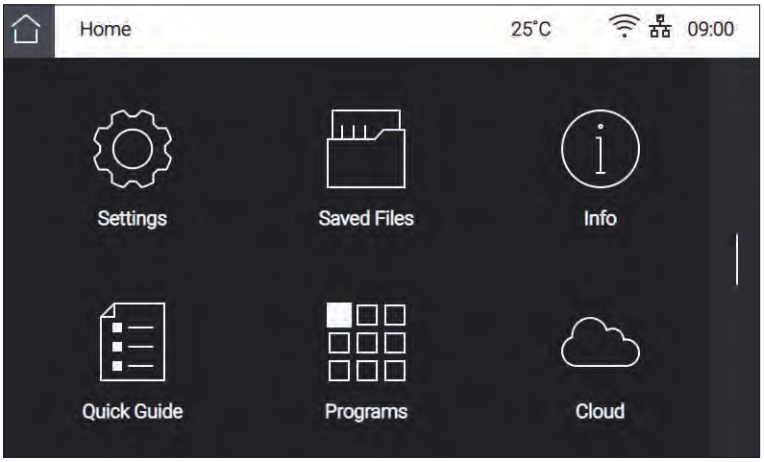

3 Swipe the screen upward, and press **[General Setting]**.

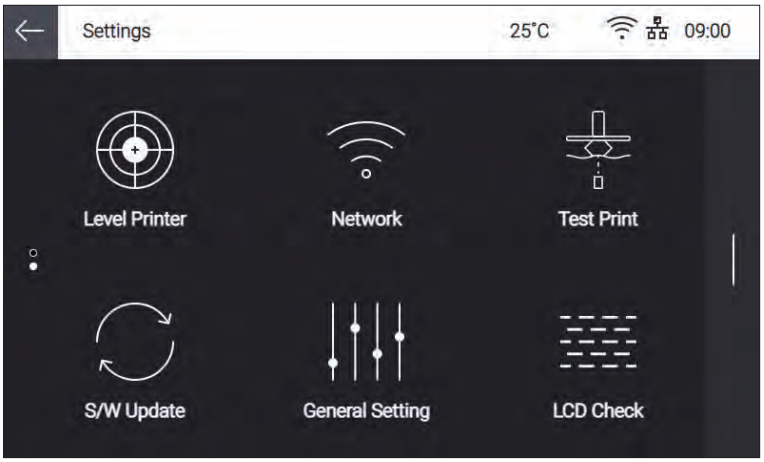

4 List of **[General Setting]** items appears. Select an item to change.

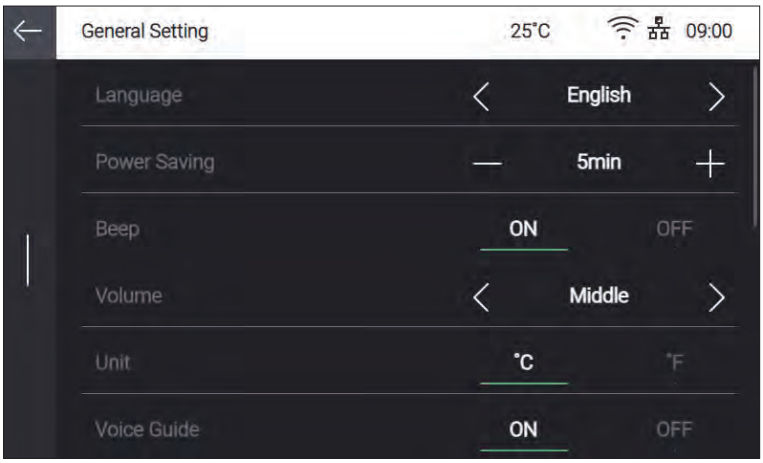

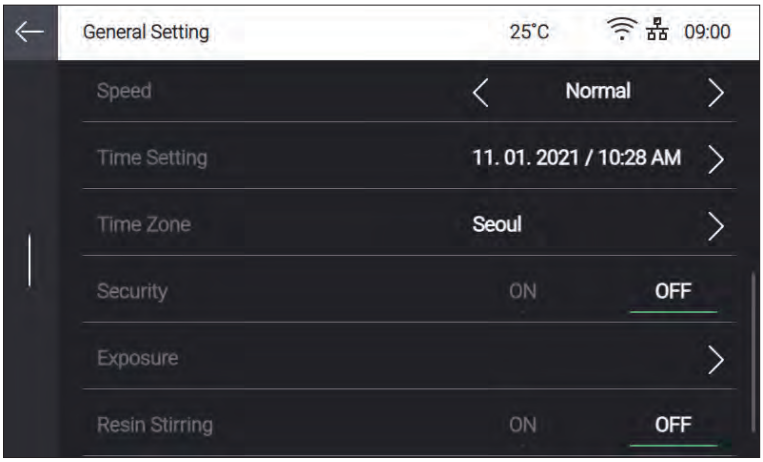

❖ Language

The system language of the machine can be chosen. Select a language using **[<]** and **[>]**.

❖ Power Saving

The time delay before entering the power saving mode can be set. The adjustable range is in the unit of 5 min. Change the value using **[+]** and **[-]**.

- 0 min : The power saving mode is not used.
- 5–120 min : The time delay before entering the power saving mode

❖ Beep

You can turn ON or OFF the beep sound of the machine.

- Value : Off/Min/Mid/Max

Reference

- Some models do not support the beep function.
  [Beep] button becomes deactivated in those models with beep function unsupported, so that you cannot select the function of the button stated above.

❖ Unit

The units of temperature can be changed.

- Value : Celsius (˚C) / Fahrenheit (˚F)

❖ Voice Guide

The voice guide and related functions can be changed.

- On/Off : Turn ON or OFF the voice guide.
- Volume : Very Low, Low, Medium, High, or Very High can be selected.
- Speed : Very Slow, Slow, Medium, Fast, or Very Fast can be selected.

Reference

- Some models do not support the voice guide function.
  The Voice Guide setting becomes deactivated in those models with the voice guide function unsupported, so that you can not select the function of the button stated above.

❖ Time Settings

The current time and date of the machine can be changed. Once set, press **[Save]** to save the settings.

❖ Time Zone Settings

The current time zone setting of the machine can be changed. Swipe the screen up and down to choose a time zone, and then press **[Save]** to save the settings.

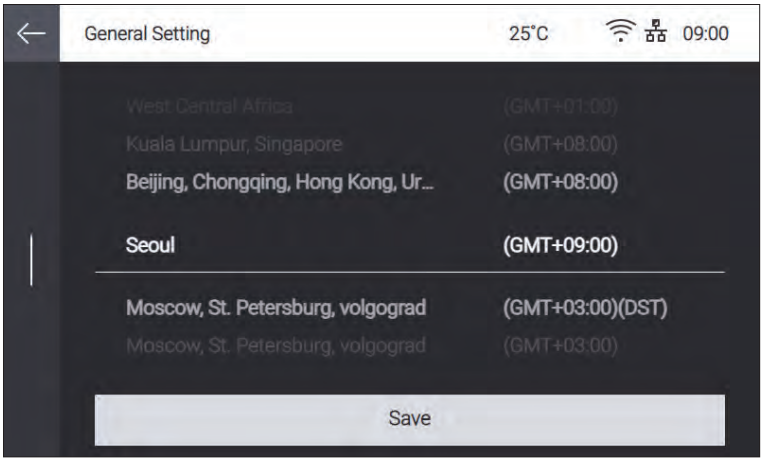

❖ Security

The machine security can be set.

❖ Exposure

This function is used to change the exposure time of the model.
Adjust and change the exposure time to get the desired print quality.
First select the resin type for which the exposure time will be changed. Press the **[+]** or **[-]** button to set

the exposure time for the selected resin type. Adjustment can be increased or decreased in 0.1 sec increments by pressing the activated **[+]** or **[-]** button. When the adjustment is complete, click **[Save]** to save the settings.

1 If you press **[Reset]**, the exposure time for the selected resin type is changed to the default value of '0'.

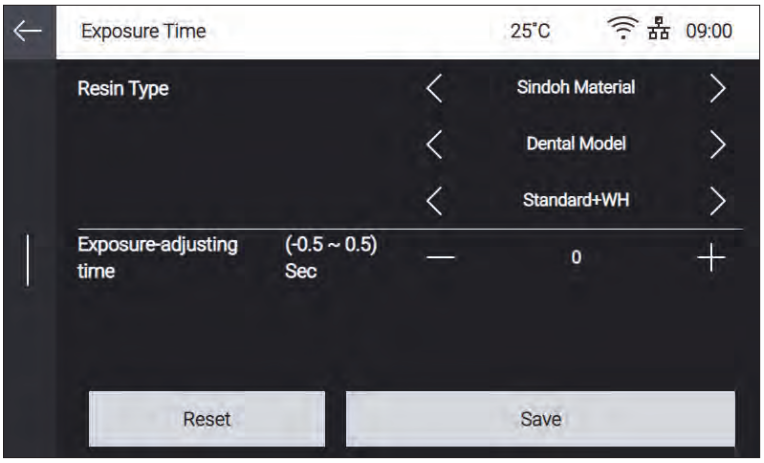

❖ **Resin agitation**

Set whether or not to move the platform up and down in the resin tank to mix the resin in the resin tank when printing starts.

LCD Inspection

This function allows you to check if the LCD has failed.

1 Press [Slide Menu Bar] from the Home screen.

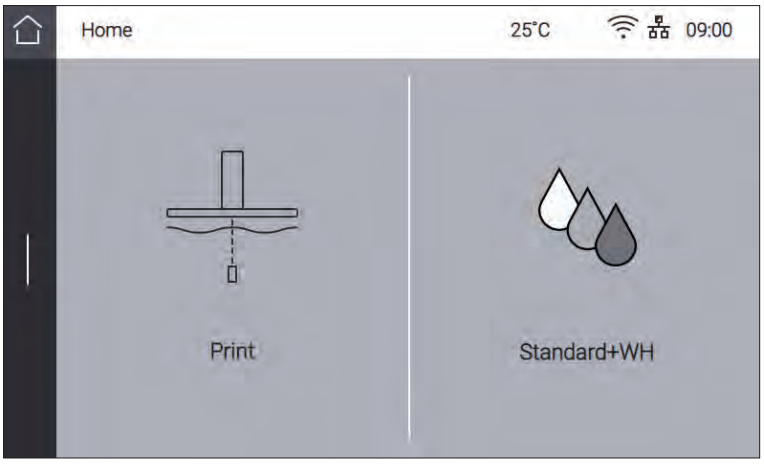

2 Press [Setting] from the Menu screen.

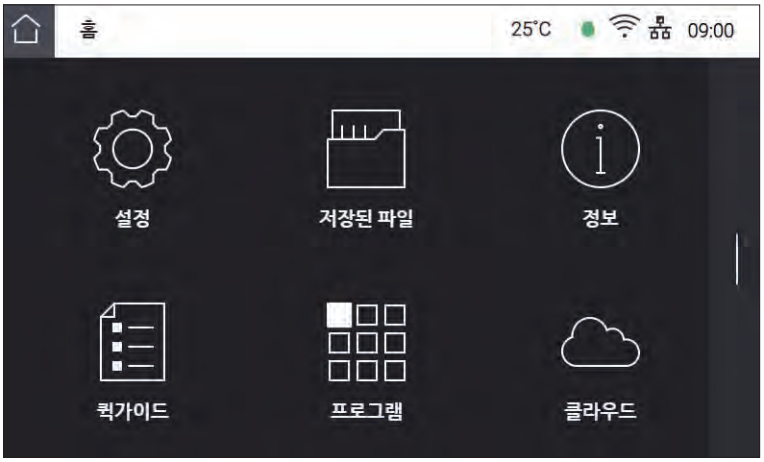

3 Swipe screen upward , and Press [LCD Inspection].

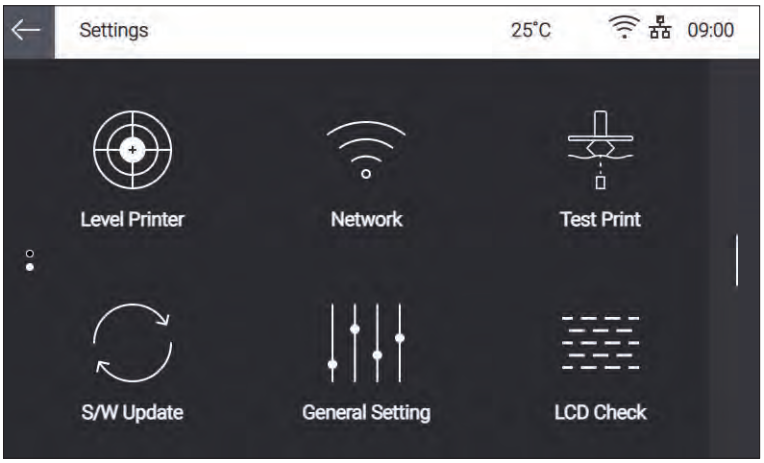

4 Press **[ON]**

5 If the character on the LCD appears, you can see that there is no problem..

1.4 Saved Files

1 Press **[Slide Menu Bar]** from the Home screen.

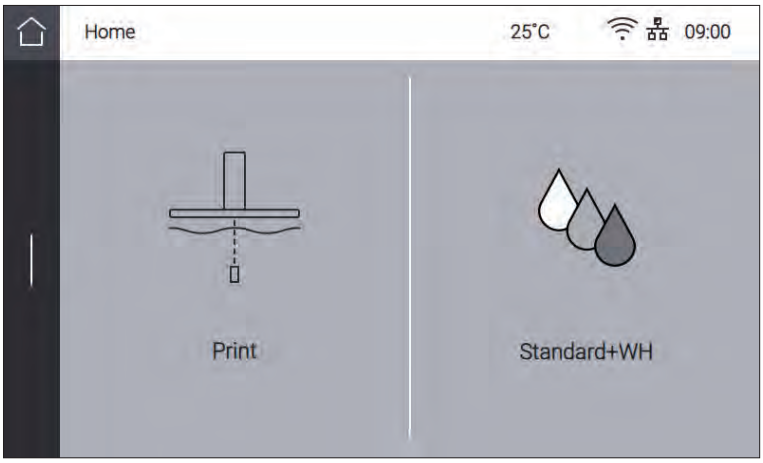

2 Press **[Saved Files]** from the Menu screen.

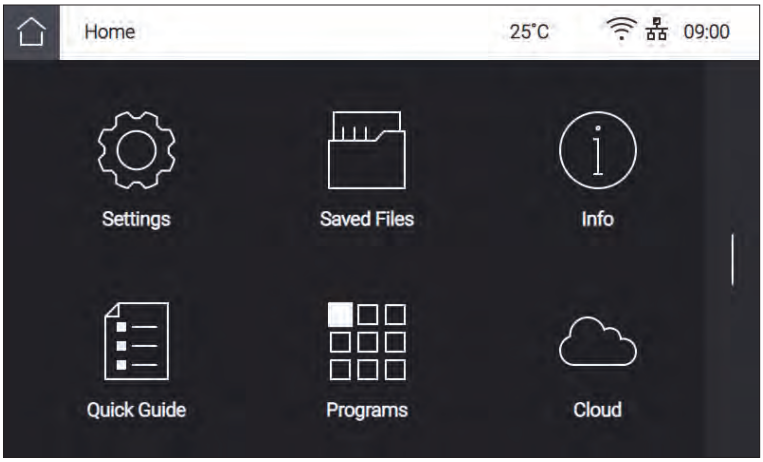

3 List of files existing in printer's internal memory is shown.

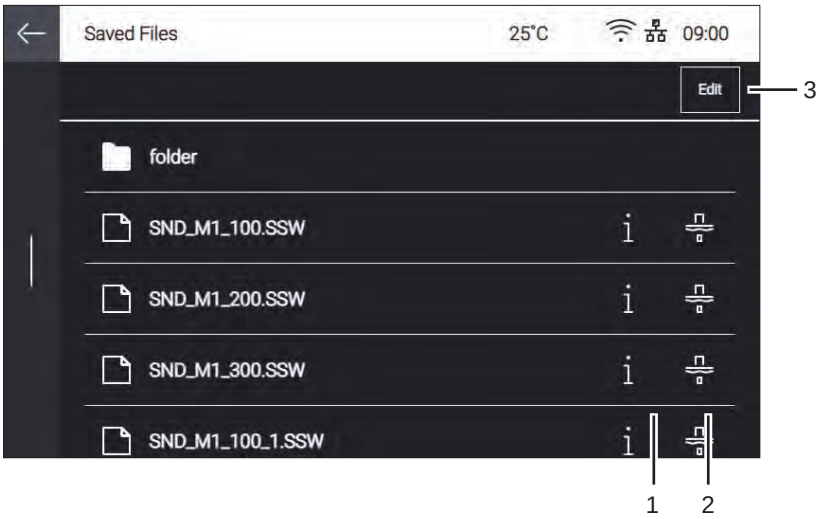

No.	Part Name	Description
1	**Info**	Display detailed information of file.
2	**Print**	Start printing a selected file.
3	**Edit**	Manage files such as file deleting/editing, in the internal storage memory of printer.

❖ Info

It shows details of file such as file name, resin type, estimated resin volume to complete printing, printing time, number of total layers, and z-direction resolution.

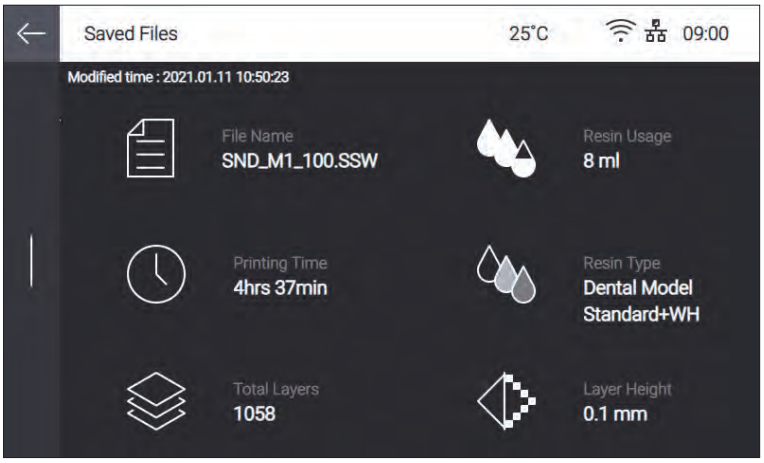

❖ Print

Check if there are remaining printed output on the platform. If there is no problem, press **[Next]**.

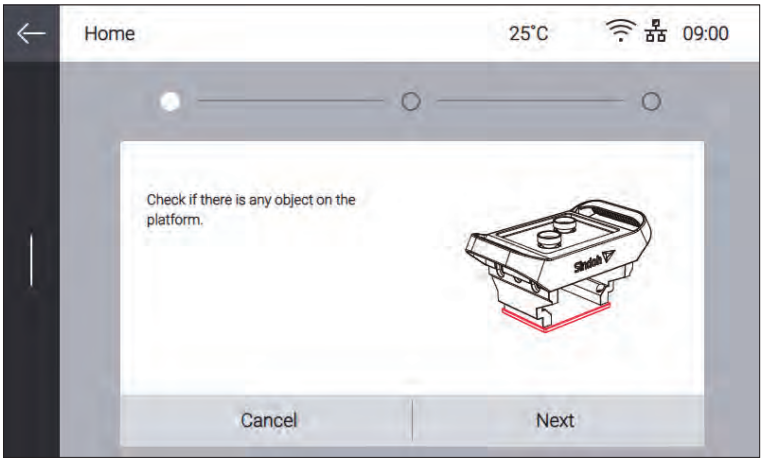

Make sure that the resin tank and platform are firmly fixed, and then press **[Next]**.

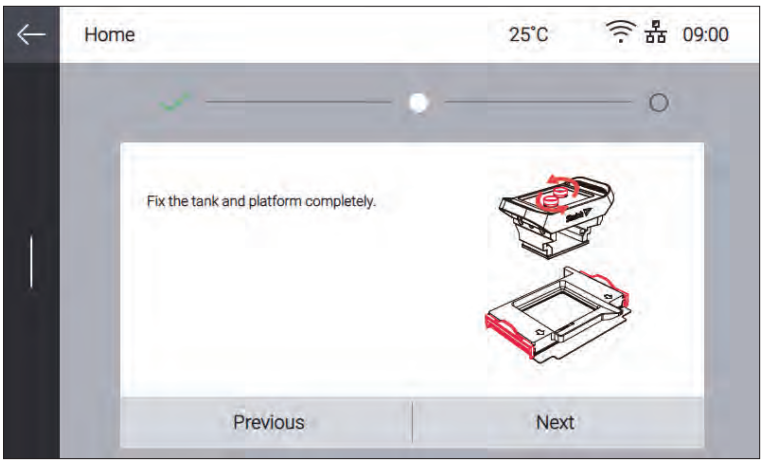

In manual resin supply mode, check if enough resin is filled in the resin tank using marks.

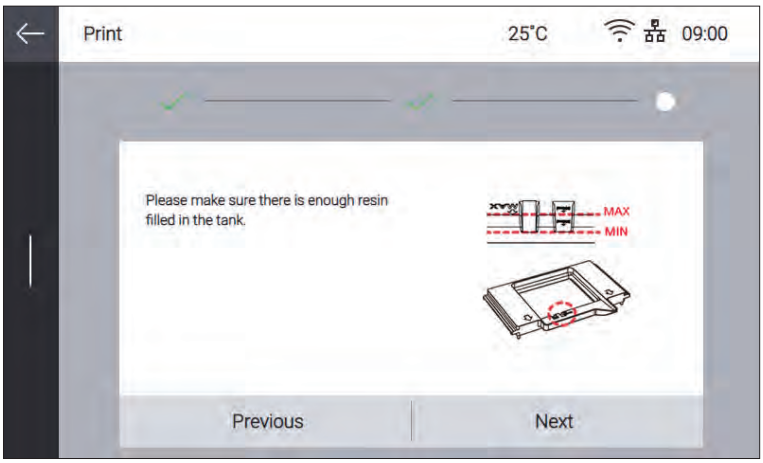

After all the procedures are completed, press **[Done]** to start printing.

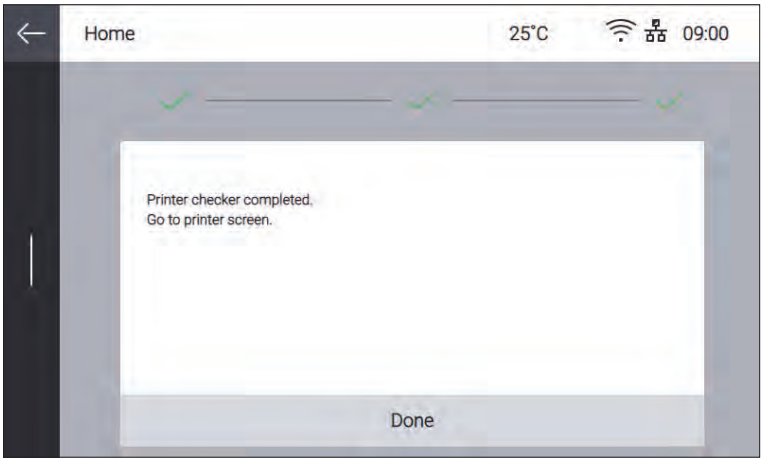

Printing gets started.

1.5 Info

This allows users to check detailed information about the machine, and to set the name of the machine and administrator password.

1 Press **[Slide Menu Bar]** from the Home screen.

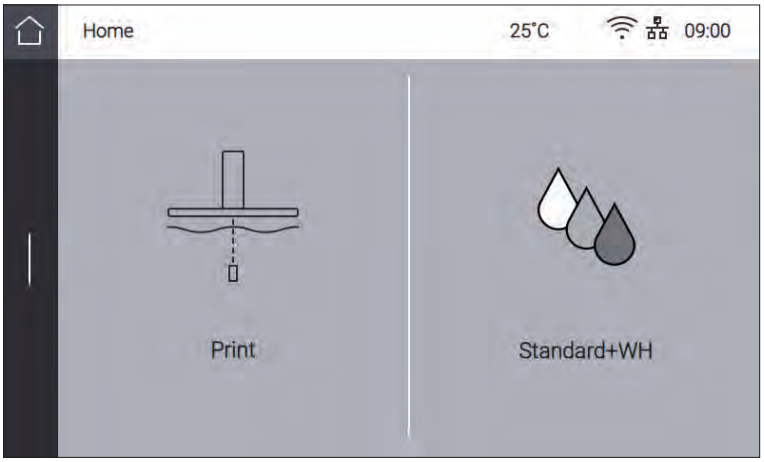

2 Press **[Info]** from the Menu screen.

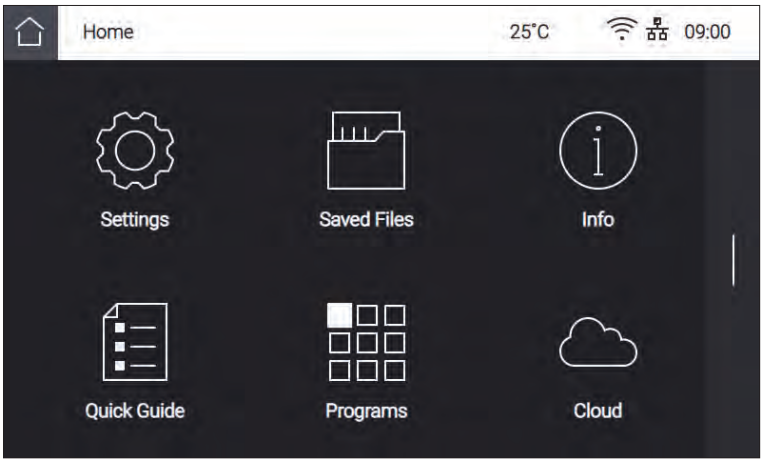

3 In Info screen, it is possible to set the name of the device and administrator password, and to see the other detailed information about the device. For history of device usage, press **[History]**.

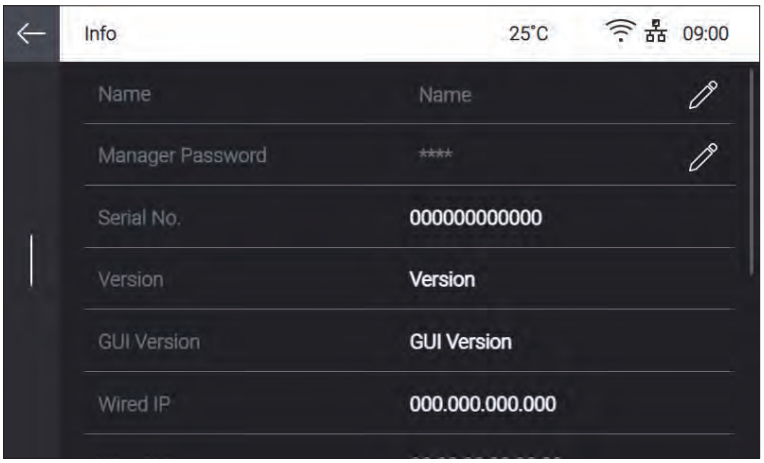

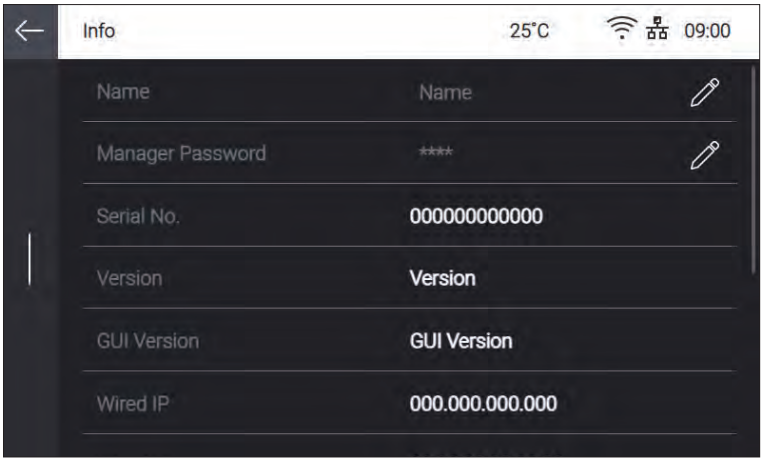

4 Statistical information regarding machine usage is shown. For details, press **[>]**.

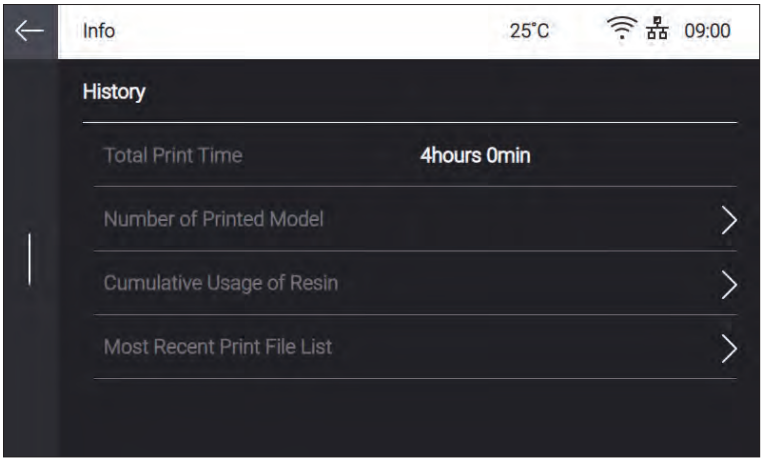

❖ Total Print Time

Total running time of the device by now is displayed.

❖ Number of Printed Model

Total number of print jobs and number of print jobs which are successfully finished are displayed.

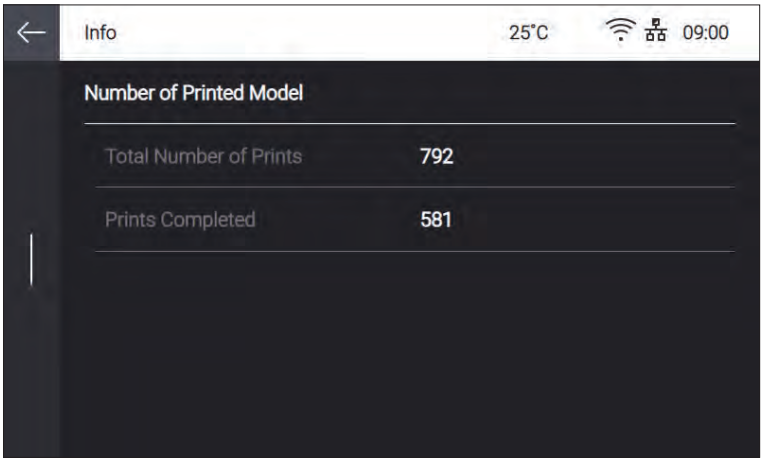

❖ Cumulative Usage - Resin

Display total cumulative amount of resin and usage volume per each resin type.

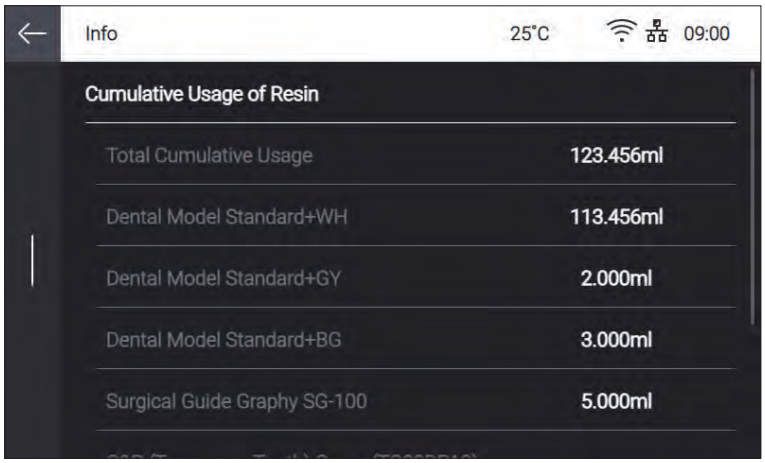

❖ Most Recent Print File List

Display the list of most recently print files.

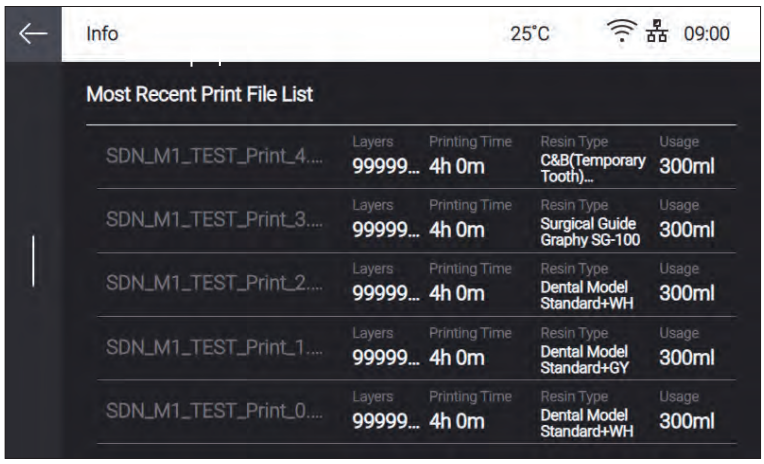

1.6 Quick Guide

It shows a brief description for each feature.

1 Press **[Slide Menu Bar]** from the Home screen.

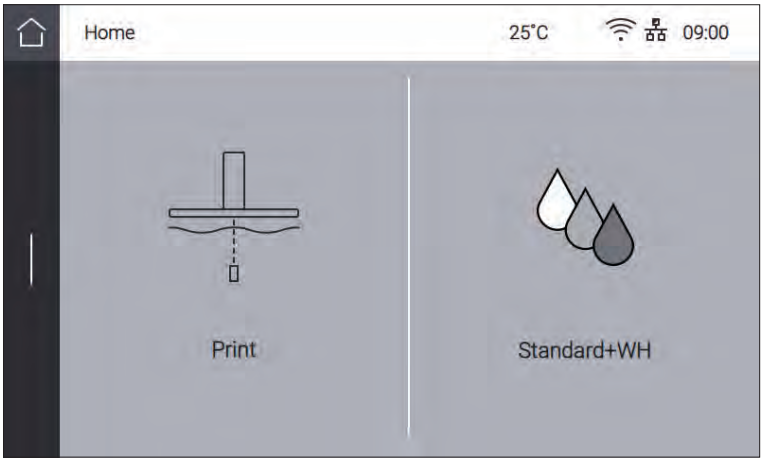

2 Press **[Quick Guide]** from the Menu screen.

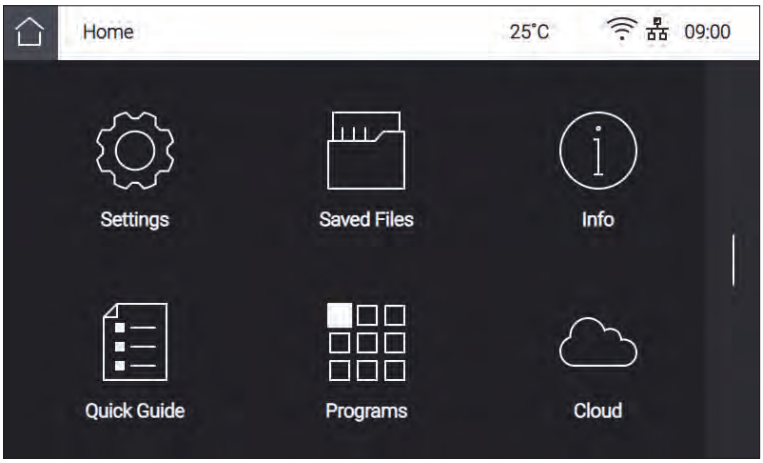

3 Select a function that needs to be explained.
If there are several pages, press the **[Previous]** or **[Next]** button to move to the previous or next page.

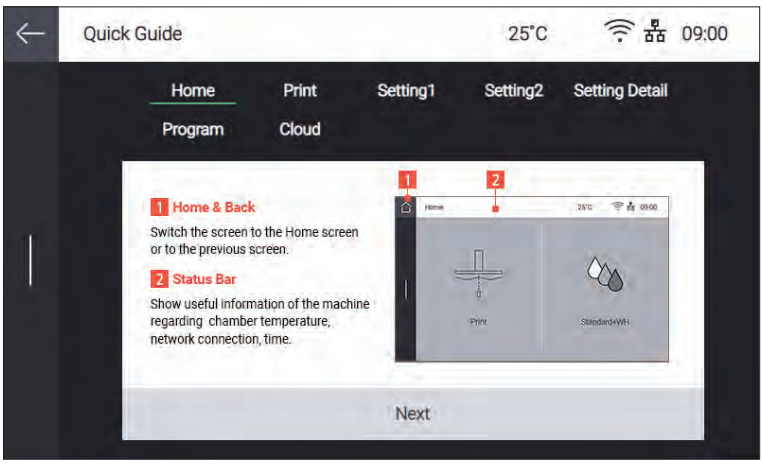

1.7 Programs

1 Press **[Slide Menu Bar]** from the Home screen.

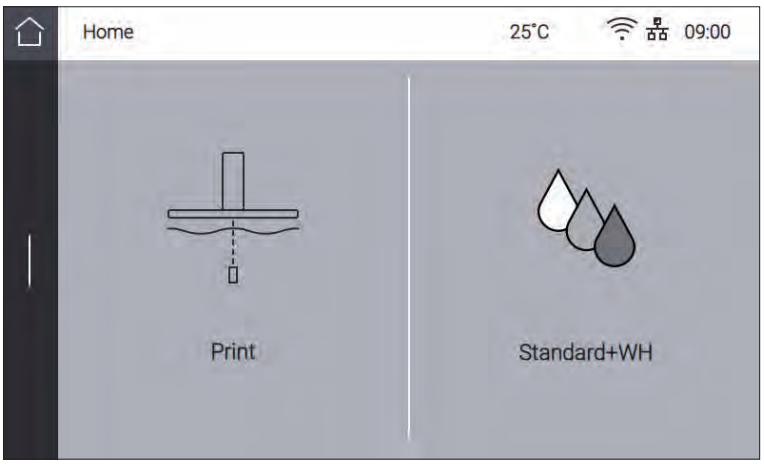

2 Press **[Programs]** from the Menu screen.

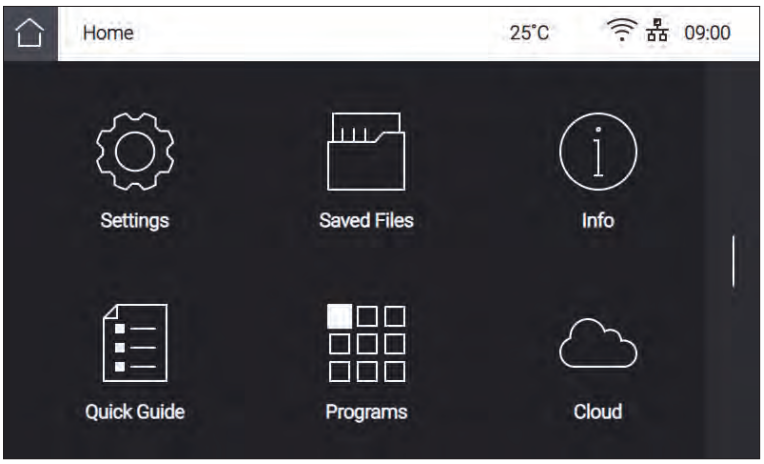

3 It displays the related sub menu.

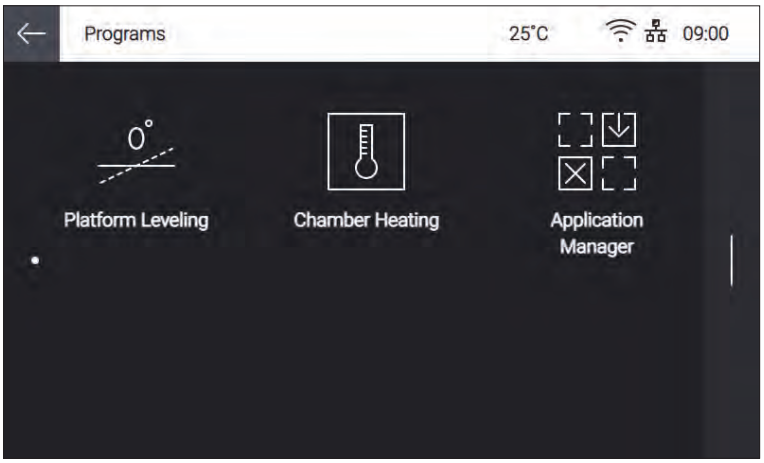

❖ Application Manager

You can install or uninstall add-In S/W..

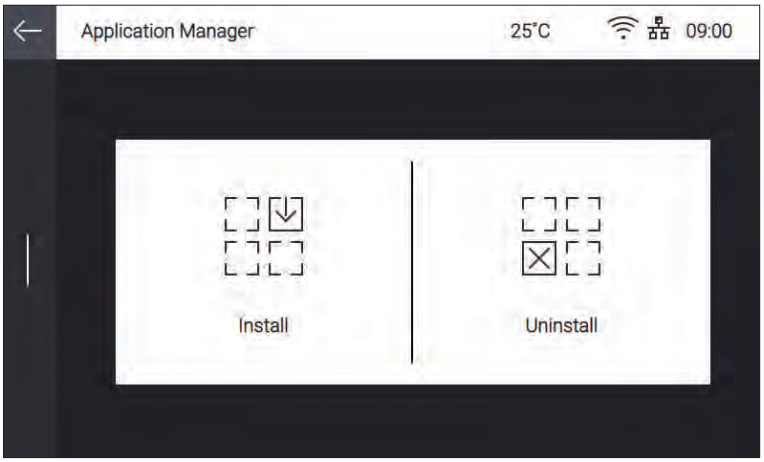

To install a new S/W, press **[ ]** icon, or press **[ ]** icon to uninstall.

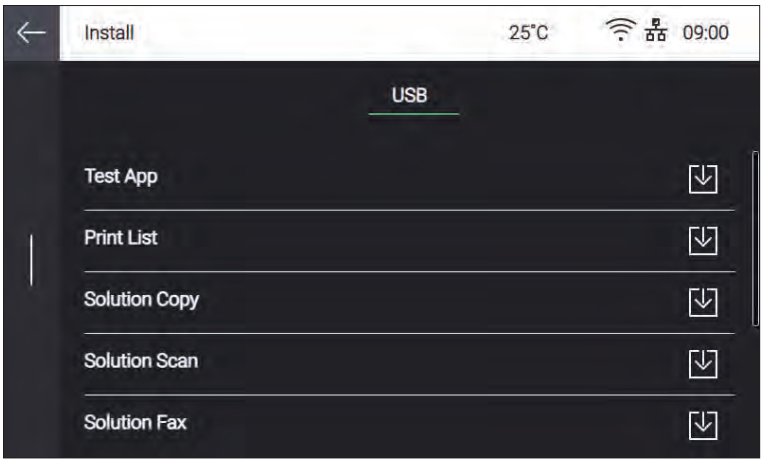

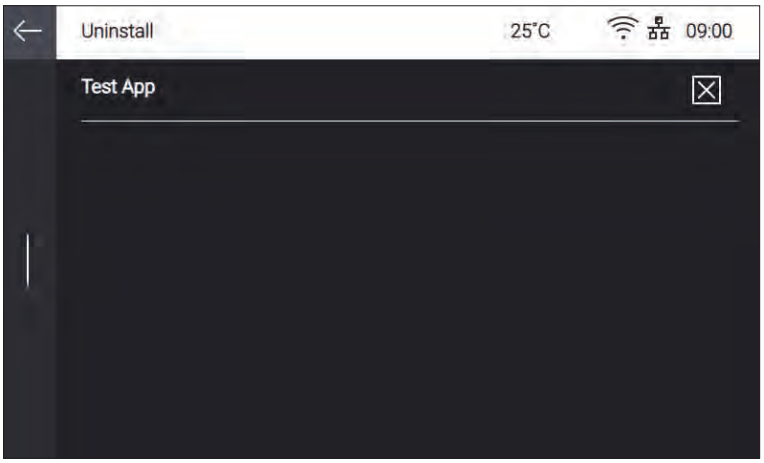

1.8 Cloud

1 Press **[Slide Menu Bar]** from the Home screen.

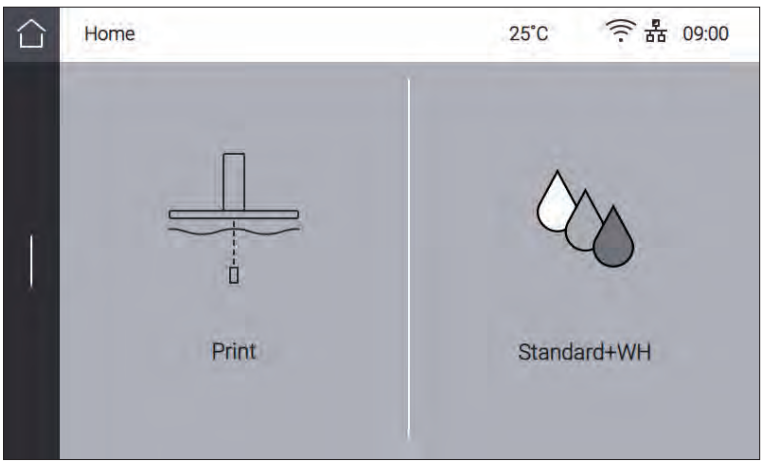

2 Press **[Cloud]** from the Menu screen.

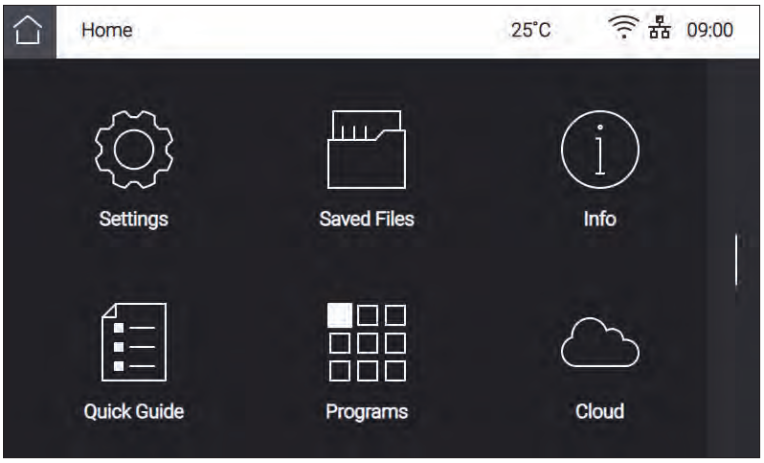

3 It displays the list of apps available via cloud service.

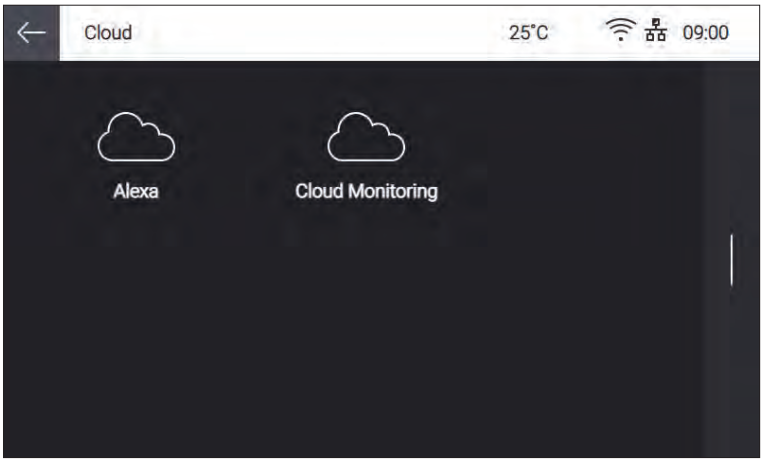

Reference

- The list of apps is subject to change without notice.

❖ Alexa

You can get a registration code to register Alexa, Google's AI service.
Name of printer can be entered if you press **[Alexa]**.

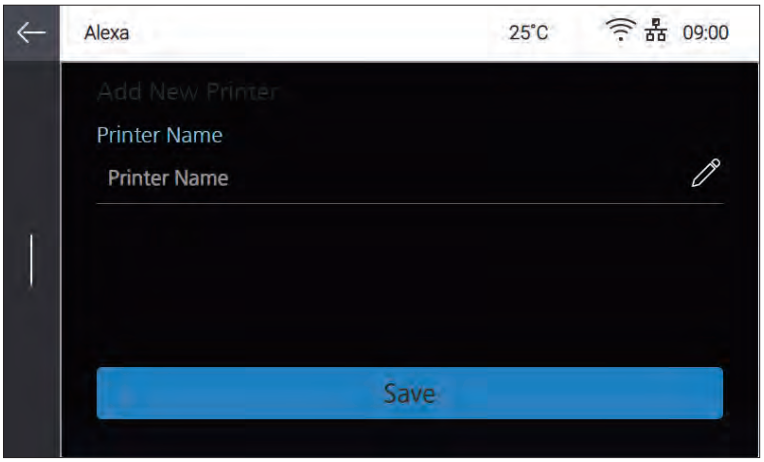

You can get a registration code if you press **[Generate Code]** to register an app supporting Alexa service.

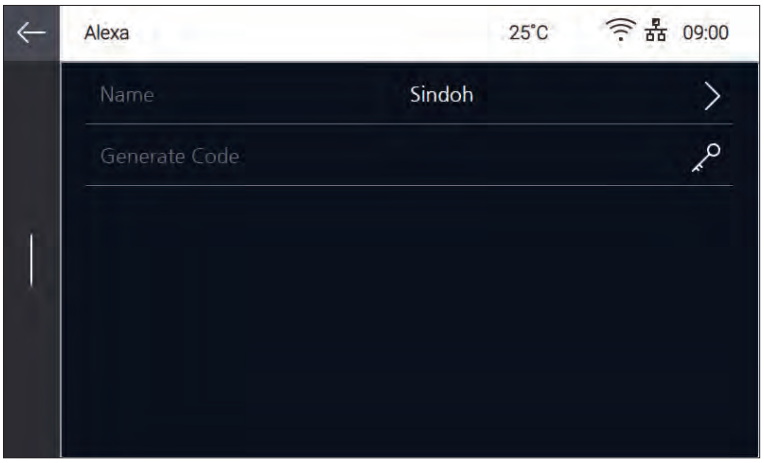

Reference

- Please visit Sindoh's homepage in order to get detailed information regarding register and activate Sindoh printer to Alexa service.

❖ Cloud Monitoring

You can register printers to Cloud Monitoring service being provided by Sindoh, and manage them. Name of printer can be entered if you press **[Cloud Monitoring]**.

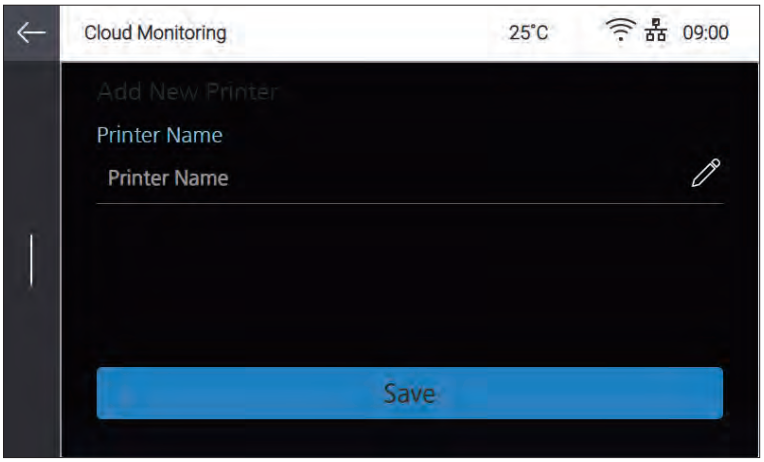

You can get a registration code if you press **[Generate Code]** to register your printer to Cloud Monitoring service.

Reference

- To get detailed information regarding register and activate a printer to Cloud Monitoring service, please refer to “Cloud Monitoring of Chapter.3 Printing”.

Sindoh A1^{SD} Series
USER MANUAL

Printing

3

1. Printing

User can start printing via USB flash drive, USB cable, or over the network.
The following Home screen on the device means it is ready to start print.

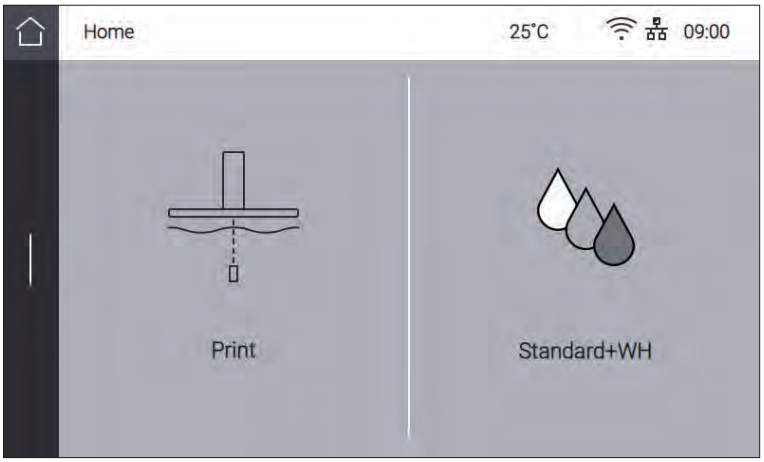

1.1 Printing from USB Flash Drive

1 Connecting USB flash drive into the device

In order to print using USB flash drive, insert the flash drive into USB port.

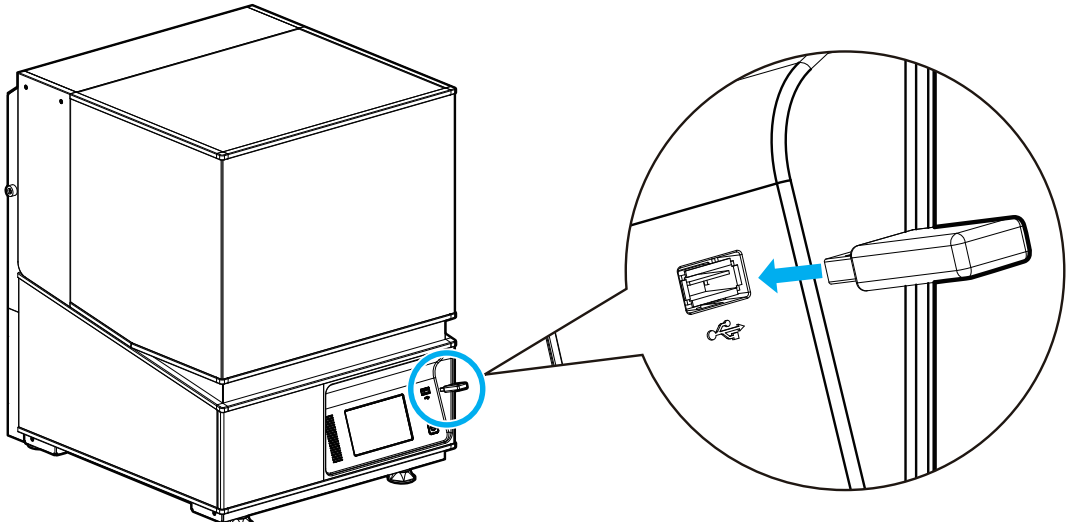

When the USB flash drive is connected while in the home screen, a list of files in the USB appears.

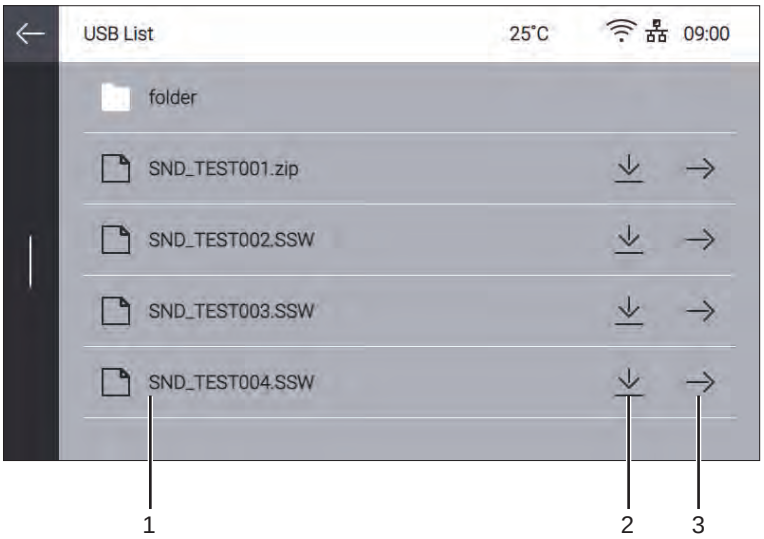

No.	Part Name	Description
1	**File Name**	A list of files existing in the USB flash drive.
2	**Download**	Downloading a file to the internal memory of the printer.
3	**Preview**	Preview image of print appears.

2 Printing Files

If you press **[Preview]** button in the file list of USB memory, image of object and related information will be shown to check before starting print.

Start print by pressing **[Print]** button if all information is correct.

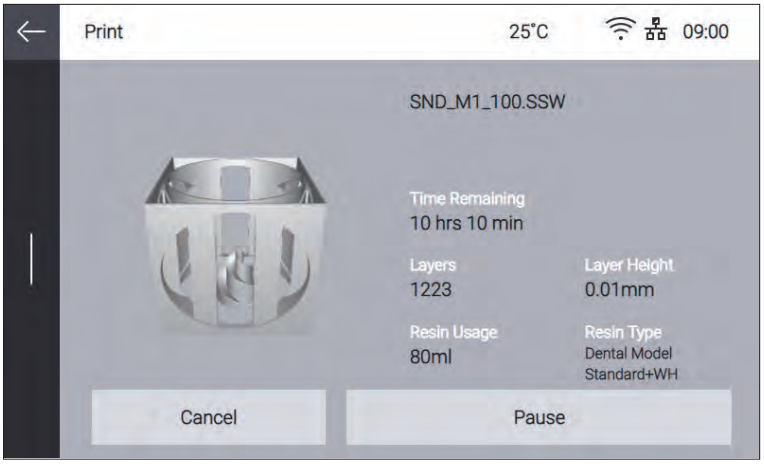

Check if there is remaining printed output on the platform. If there is no problem, press **[Next]**.

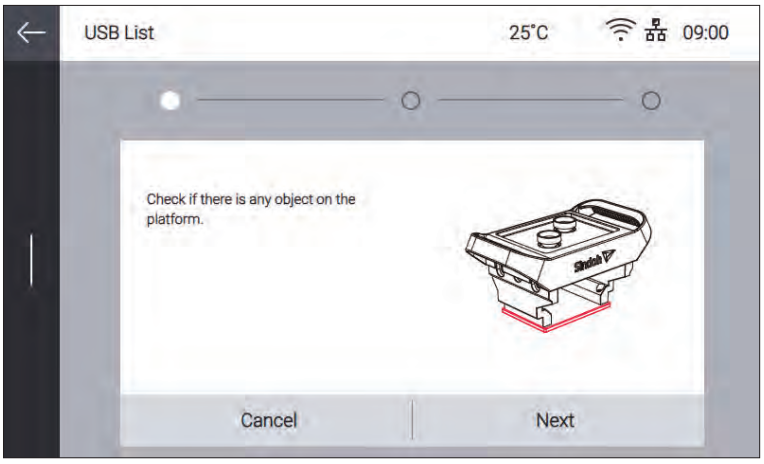

Make sure that the resin tank and platform are firmly fixed, and then press **[Next]**.

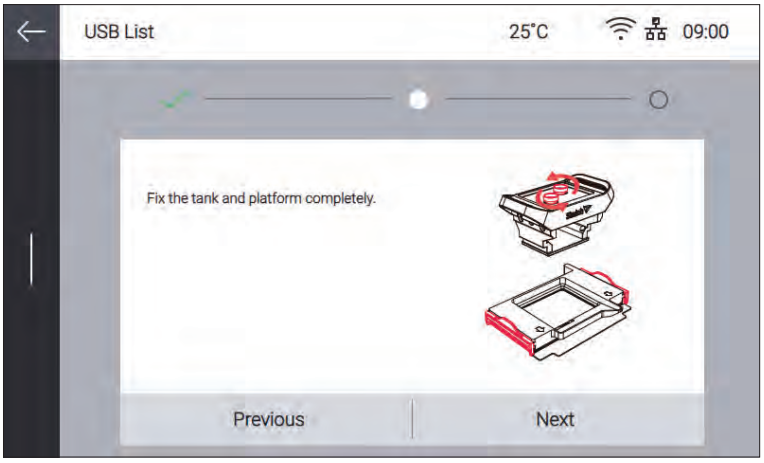

In manual resin supply mode, check if enough resin is filled in the resin tank using marks.

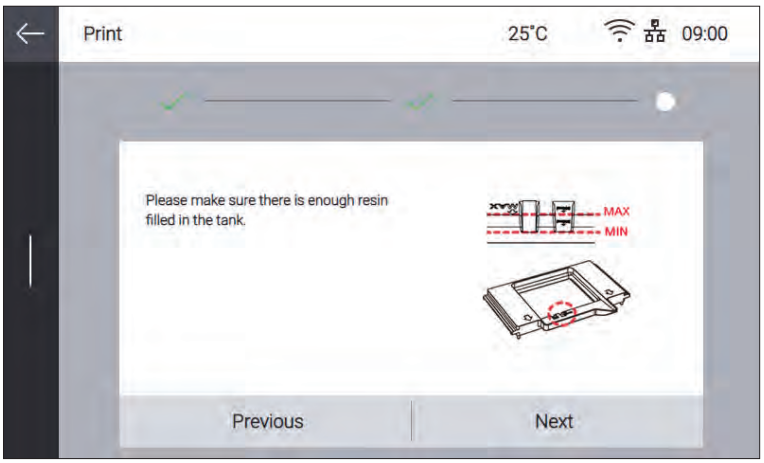

After all the procedures are completed, press **[Done]** to start printing.

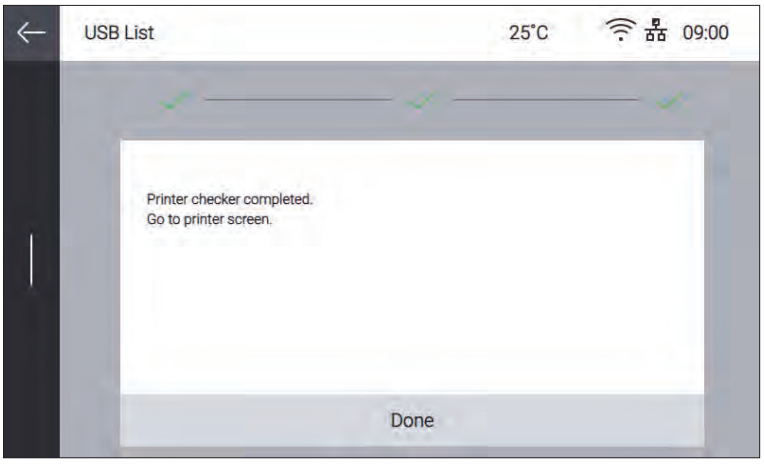

You can find a pop-up message saying USB should not be removed during file transfer. If USB memory is removed before the pop-up message disappears, printing will be canceled automatically.

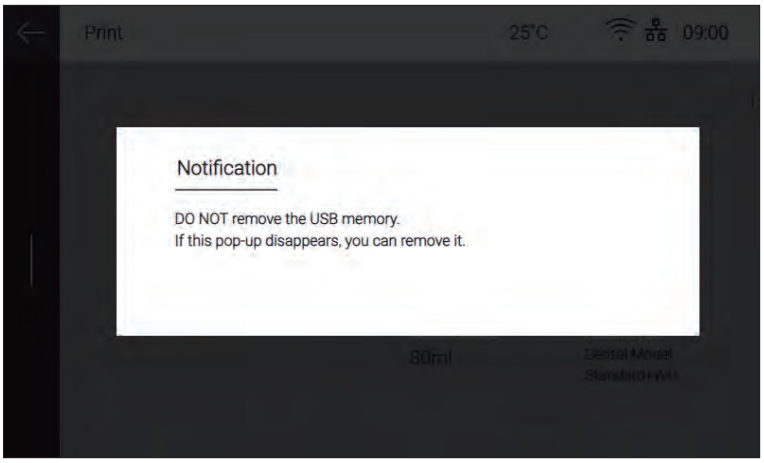

Icon ( ), which means that USB memory can be removed, will show up, and printing starts.
Icon will disappear after USB memory is removed.

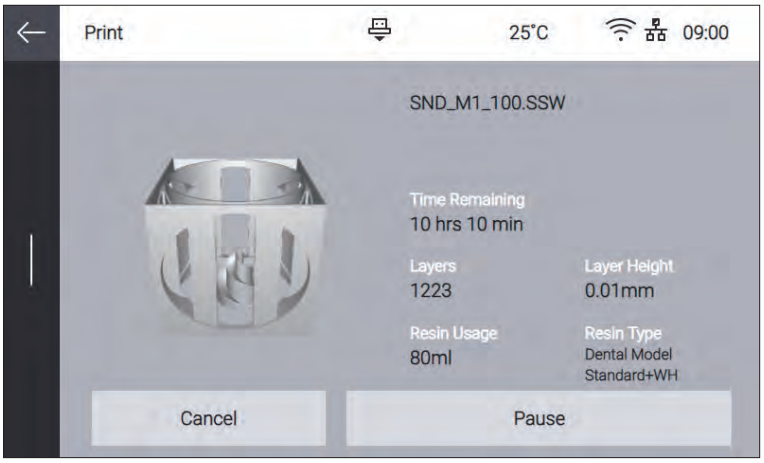

If chamber temperature is lower than the target, heater will heat up the inside of the chamber.
When chamber temperature reaches the target, printing starts.

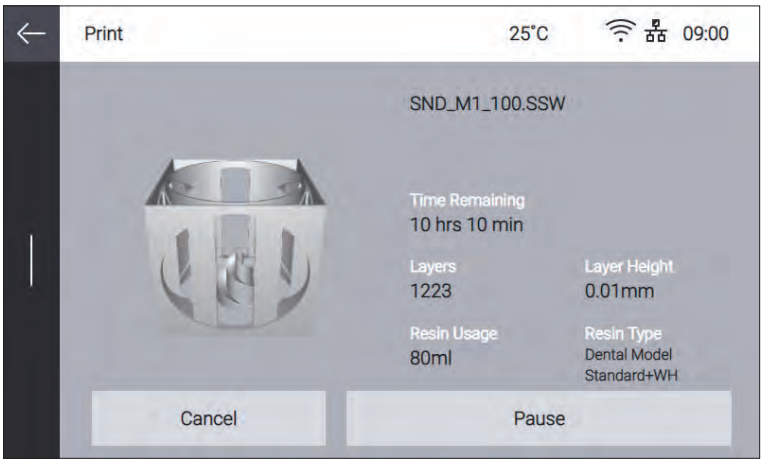

3 Pausing Print

Pressing **[Pause]** during printing will pause the current print job, and pop-up menu showing additional functions appears.

- **Resume**
  It returns to the printing screen and continues to print.

⚠ Caution

- **There may be a line when checking the printing in pausing mode.**

4 Cancel Print

Press **[Cancel]**. A dialog box will then be prompted to confirm the termination of operation. Press **[Yes]** to terminate the current operation and return the platform to its home position.

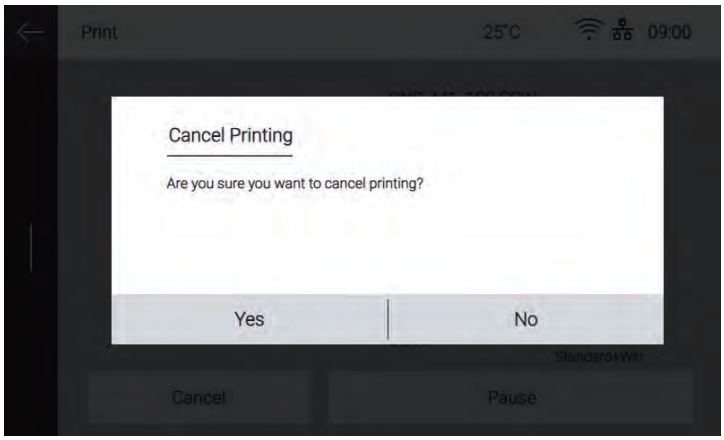

⚠ Caution

- **If printing is canceled, more cured debris or contaminants may remain in the resin tank and platform in comparison to when the printing is fully completed. Clean the platform and resin tank thoroughly for the next printing.**
  Refer to "Resin Tank and Platform of 5. Maintenance" on how to clean them.

5 Printing Completion

If printing is complete, the platform moves up to return to the original position.
When the moving of the platform is finished, remove the platform from the machine, and then print.

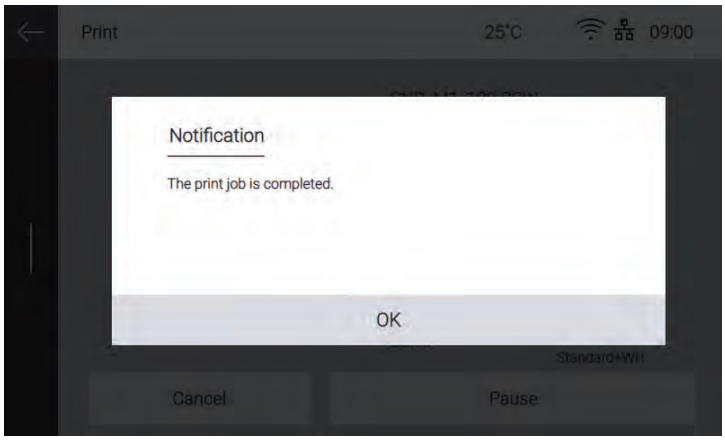

Reference

- For removing a print from the platform and preparing for the next printing, refer to "4. Checking Printed Output" for details.

⚠ Caution

- **To prevent users from accidentally using the machine with the orange cover open, double safety systems are installed.**
  When the cover is opened during printing, the machine is designed to temporarily stop printing for the user's safety. Once the cover is closed, printing will resume. However, as it may result in print quality degradation or printing failure, do not open the orange cover during printing by mistake.

1.2 Printing via PC

1 Prepare the PC connected to the same network to which the printer is connected.

2 Run A Desktop SW.

3 Press the **[Print]** button.

Reference

- For pausing and canceling printing, please refer to “Printing from USB flash drive” for details.

1.3 Cloud Monitoring

This function lets users check the state of the machine remotely using web browser of PC or mobile device, and receive the printing status through email.

Reference

- Cloud monitoring may not be supported depending on models.

1 **Sign Up/Login**
Connect to Cloud Monitoring service(https://cloud3d.sindoh.com) and login.
If you don’t have an account, click **[Sign Up]** to create.

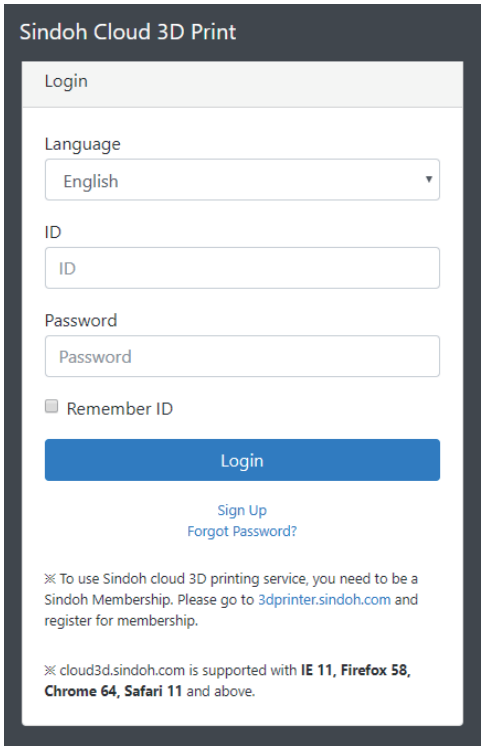

2 Initial Screen

If you login Cloud Monitoring service very first time, the initial screen as follows is shown.
Adding a new printer is required because no printer is registered yet.

3 Generation Code

Go to **[Cloud Monitoring]** of UI menu, and press **[Generate Code]** to get a registration code.

Generated code should be used in 600 seconds, otherwise it will be void.
New registration code will be generated if you press **[Generate Code]** again.

Reference

- For details of entering Cloud Monitoring of UI menu, refer to “Cloud of Chapter.2 UI Menu Function”

4 Adding New Printer

In the initial screen, press **[Add New Printer]** and enter the registration code generated in Cloud Monitoring of UI.

If registration code is correctly entered, printer registration will be finished.

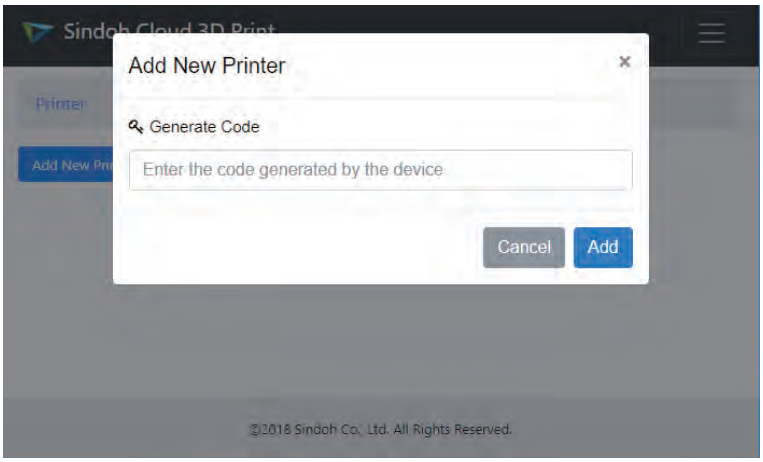

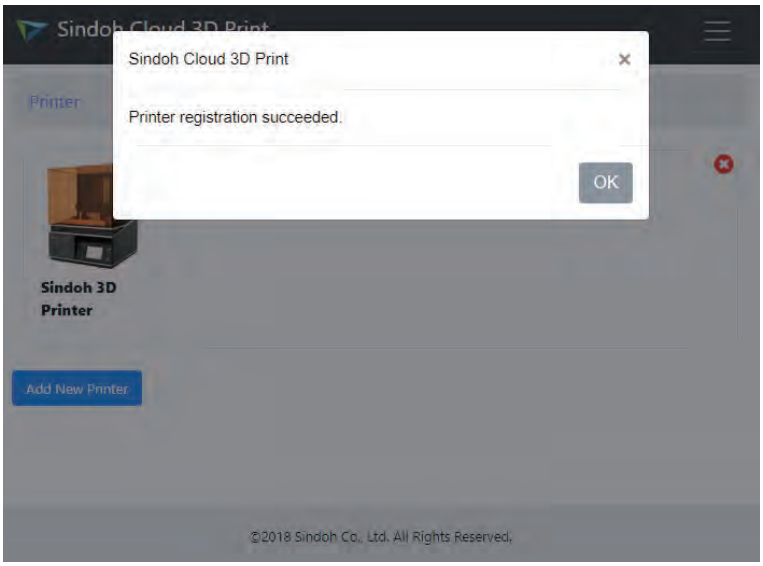

5 Starting Screen
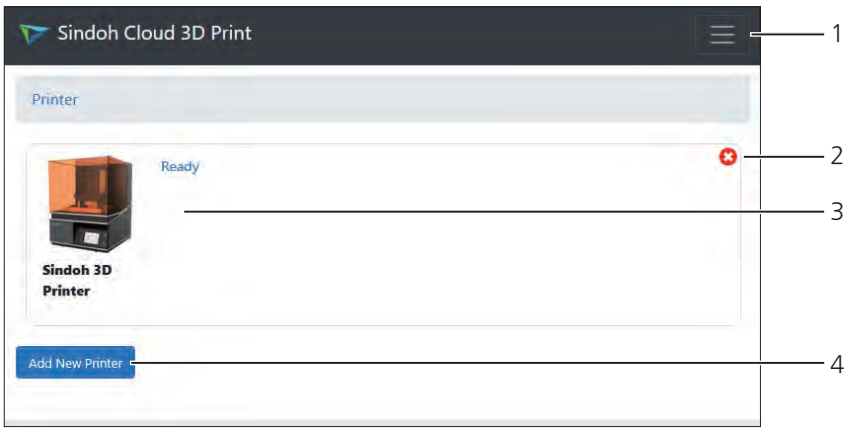
Starting screen of Cloud Monitoring consists of as follows.