No.	Name	Description
1	**Menu**	Select additional features provided in Cloud Monitoring
2	**Printer Delete Button**	Delete registered printer.
3	**Printer Status**	Names and types are shown.
4	**Add New Printer**	Add new printer

6 Additional Features

Press Printer Status and then information of printer detail is shown.
You can find out resin type, number of print completed, total amount of resin usage and resin usage history.

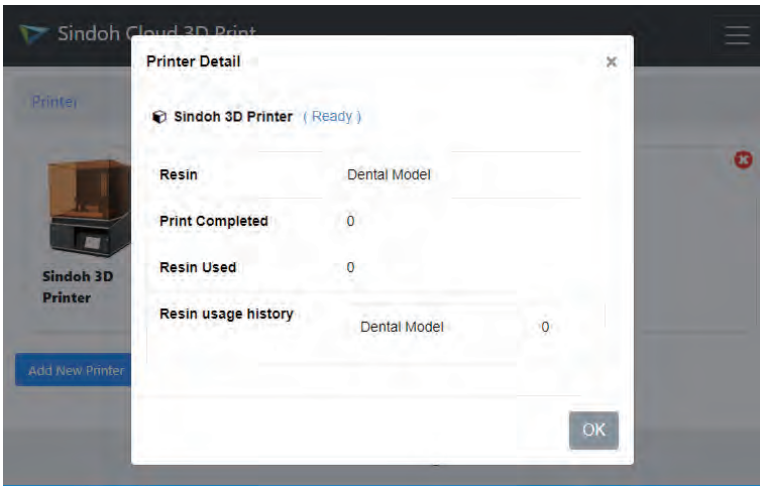

Additional features will be shown when you press [Menu] button.

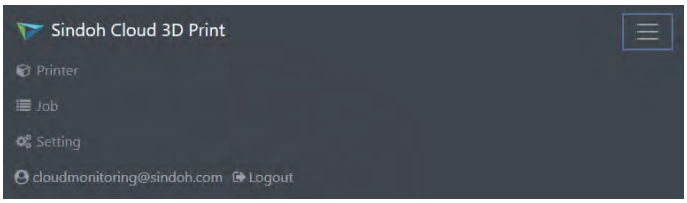

❖ Printer

You can go back to the starting screen of Cloud Monitoring.

❖ Job

It shows the job history of the printer.
Name of model file, printer, resin type and usage and print time can be checked.

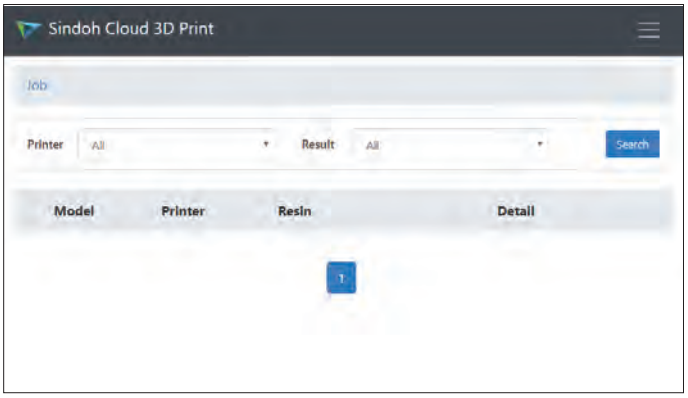

❖ Setting

Email address to which printer's status is sent can be set, and change email notification setting.
If you need to use several email addresses, use semi-colon.
(i.e cloudmonitoring1@sindoh.com ; cloudmonitoring2@sindoh.com)

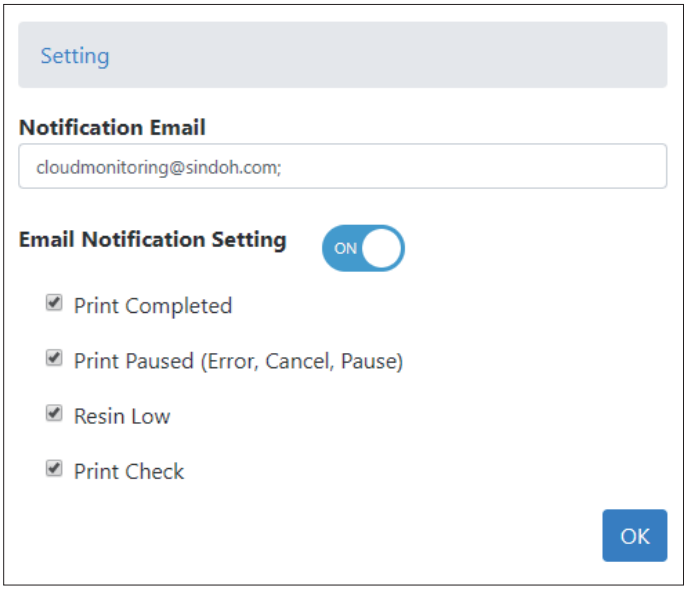

1.4 Changing Resin

When a resin different from the current one needs to be used, clean up the resin tank and platform to ensure the best print quality and to prevent mixing.

1 Cleaning the platform

Clean the platform using a cleaning brush, isopropyl alcohol (IPA), and a paper towel. Remove existing resin as much as possible.

Reference

- Regarding how to clean the platform, refer to "Platform of 5. Maintenance".

2 Cleaning the resin tank

Clean the release film and walls of the resin tank using isopropyl alcohol (IPA) and a paper towel.
clean it using isopropyl alcohol (IPA) or glass cleaner and a microfiber cloth if required.

⚠ Caution

- **For details on how to clean the resin tank, refer to “Resin Tank of 5. Maintenance”.**

Sindoh A1^{SD} Series
USER MANUAL

Checking Printed Output

4

1. Checking Printed Output

⚠ Caution

- **Wear nitril gloves before getting started.**

1.1 Detaching Printed Output

1 Standby Until Platform Returns To Ready Position

After printing is finished, wait until platform completely returns to ready position.
Do not open the orange cover before platform stops moving.

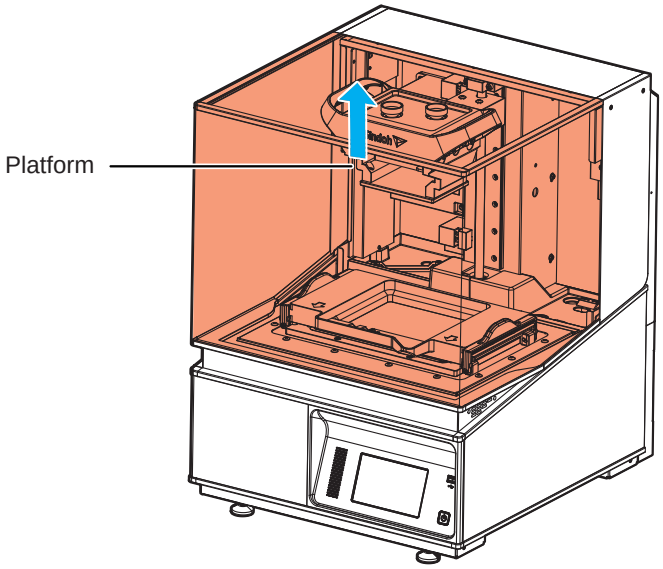

2 Platform Locking Knobs Removal

When platform stops moving, open the orange cover and remove two platform locking knobs by turning them in counterclockwise direction.

Important

- Be careful not to drop knobs into resin tank when removing them.
  The release film of the resin tank or LCD protective glass may be damaged.

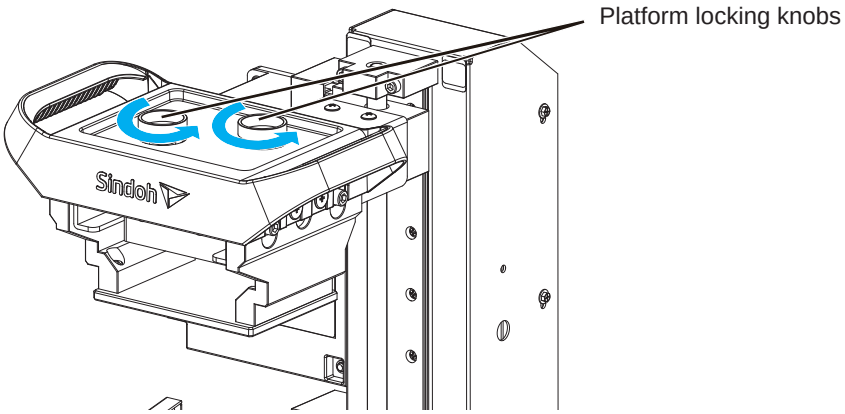

3 Platform Locking Screws Removal

If not removing the resin remnant sufficiently, the table, work area or machine exterior may become contaminated by the overflowing resin from the platform when carrying the platform.

As shown in the picture below, please place the platform over a resin tank that resins accumulated on the platform drop to the resin tank.

Please remove the remaining resin by scraping with the scrapper shipped with the machine.

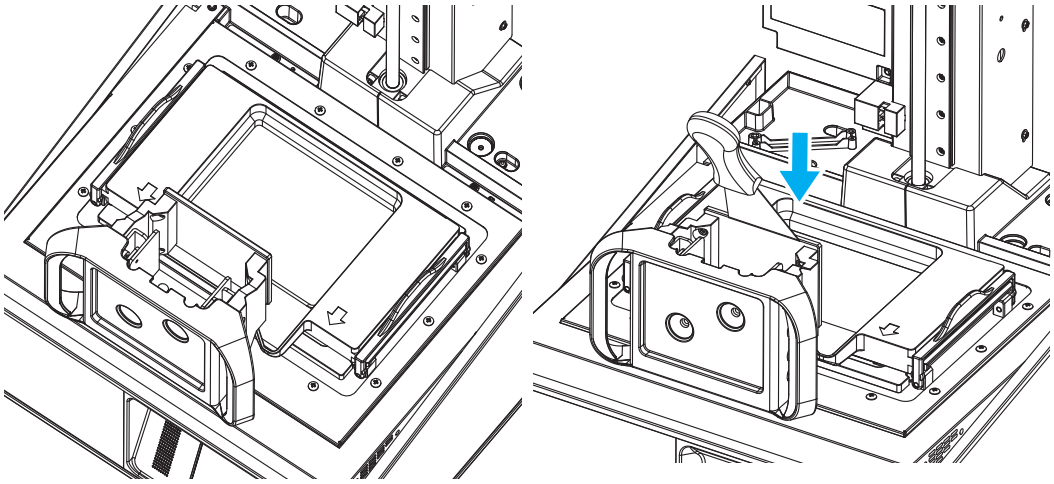

Important

- Be careful not to drop or splash resin to other parts but resin tank. Move the metal scrapper slowly so that resin falls into the resin tank at the edges of platform.
- Be careful not to damage the output on the platform during the operation.

Caution

- **The blades and edge of the metal scraper are very sharp, so be careful not to injure yourself when scraping the resin.**

4 Detaching the printed output from platform

Remove the platform and move it to cleaning tray enclosed in finisher kit.

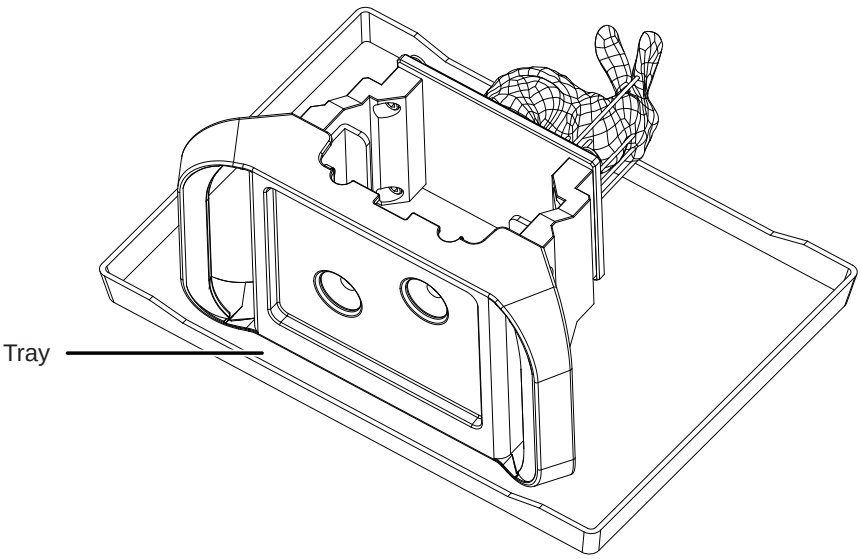

Important

- As moving the platform away from the machine, be careful not to let the resin splash or spill onto any part of the resin tank.

Insert blade of metal scrapper between printed output and platform and detach it by pushing scrapper slowly and carefully.
Start detaching from corners of printed output and continue to insert scrapper inward.

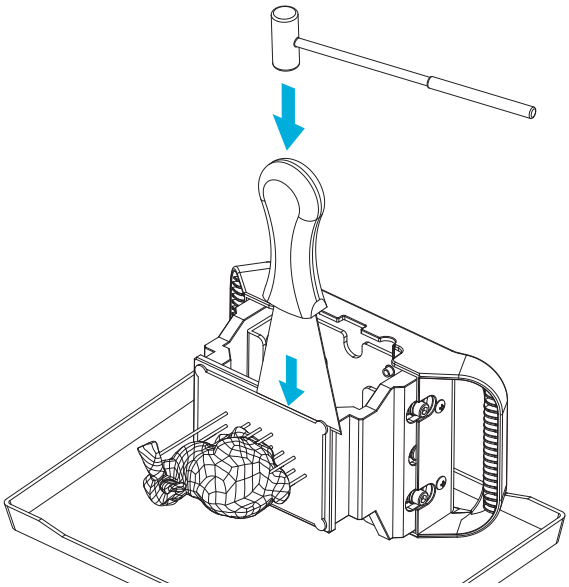

At every corner, there are specially designed protrusions that let the blade of the metal scrapper easily slide into between the platform and prints. Use these protrusions to remove prints from the platform.

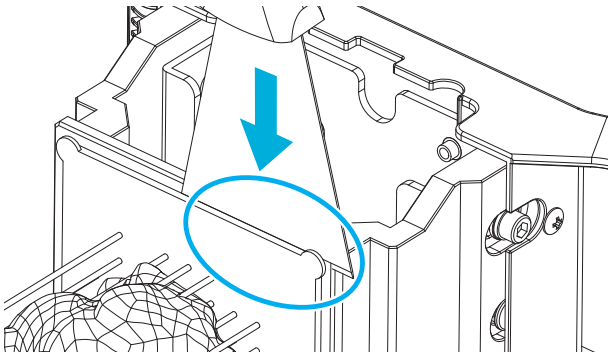

Reference

- Protrusions for detaching prints are available only with A Desktop S/W.
- If it is difficult to remove printouts from the platform, remove the printouts by hammering the metal scraper (Using hammer in finisher kit)

Caution

- **The blades and edge of the metal scraper are very sharp, so be careful not to get injured when removing the output.**
- **Be careful not to damage the metal scraper by touching the output.**
- **When removing the print object from the platform, please be cautious not to damage the platform surface with a scraper.Damage to the platform surface can result in severe damage to the release film or affect printing quality.Therefore, remove the protrusions on the platform surface completely.**
- **For some brittle resins, pay attention to breakage when removing the sculpture from the platform. If necessary, it is recommended to create a support in the output and print it.**

- **After removing the platform from the unit, be sure to close the orange cover. If the resin contained in the resin tank is exposed to external light for a long time, the resin may harden and cause the printing failure.**

1.2 Finishing the Printed Output

1 Removing supports

Remove supports using the nipper enclosed in the finisher kit.

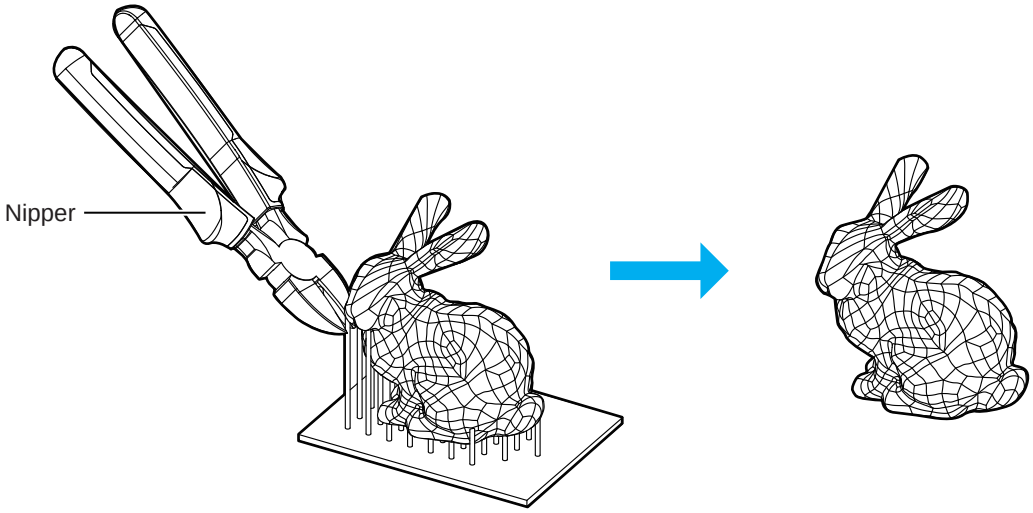

⚠ Caution

- **Use the nipper with care because the blade is sharp.**
- **Be careful not to cut the printed output by mistake.**

2 Cleaning the printed output with isopropyl alcohol (IPA)

Pour isopropyl alcohol (IPA) in the washing tub enclosed in the finisher kit, and put the printed output in IPA to remove remaining resin.

Shake it to facilitate removing resin.

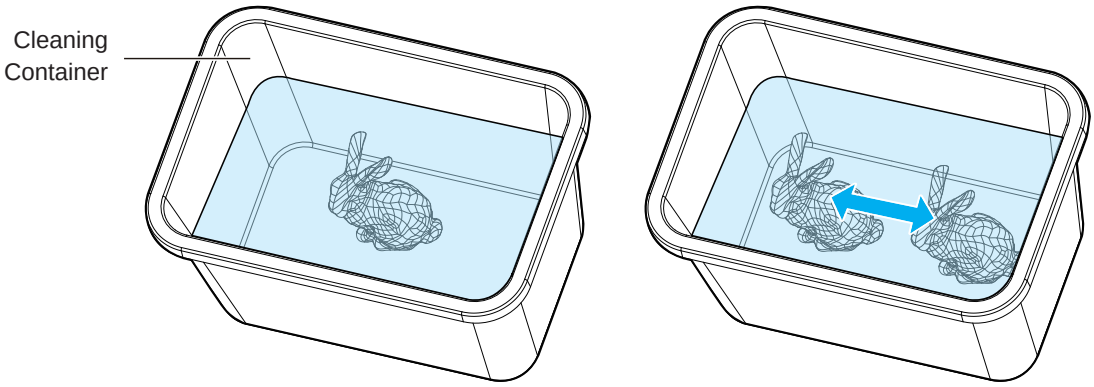

⚠ Caution

- **Do not place the IPA close to fire because it is flammable.**

Remove remaining resin using a brush or toothbrush.

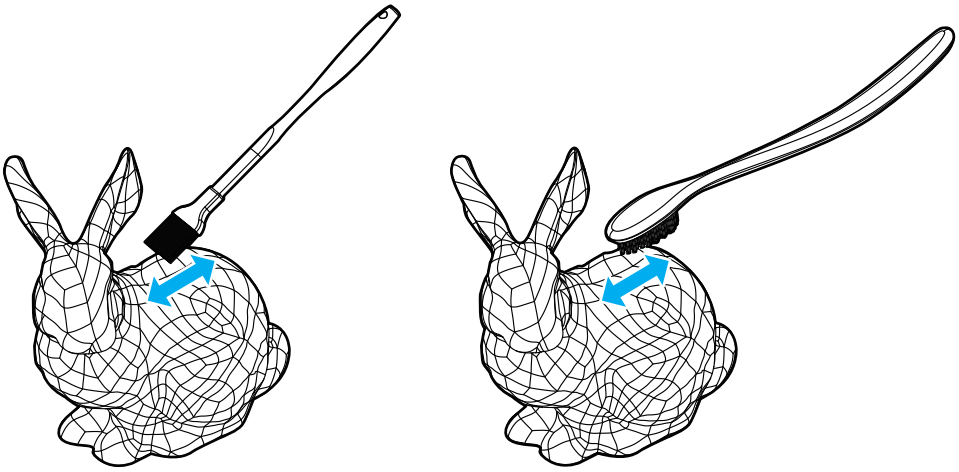

Use a sprayer to wipe out the fine gaps or holes in the output with IPA.

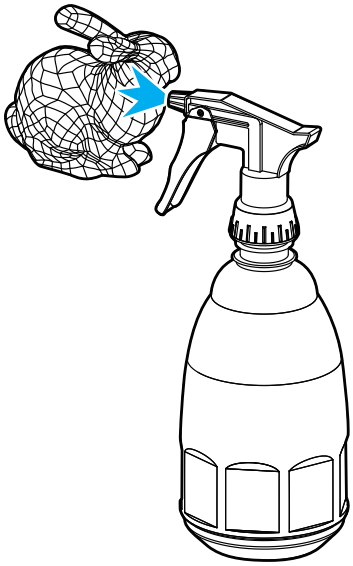

3 Drying and post-curing

Important

- The curing time may vary depending on the printed output's size and shape.
- For quick curing, fill a transparent container with water, and put the printed output in it.

Completely clean up IPA using a paper towel, or dry it well using an air compressor.
Then, expose the printed output to sunlight for 60 min or use a UV curing machine (optional) for curing.

1.3 Preparing the Next Print

1 Cleaning Platform

Remove debris of print and contaminants remaining on the platform using an enclosed metal scraper.
Clean remaining resin on the top and bottom of the platform using a paper towel and IPA.
Finally, clean all remaining IPA using a dry paper towel.

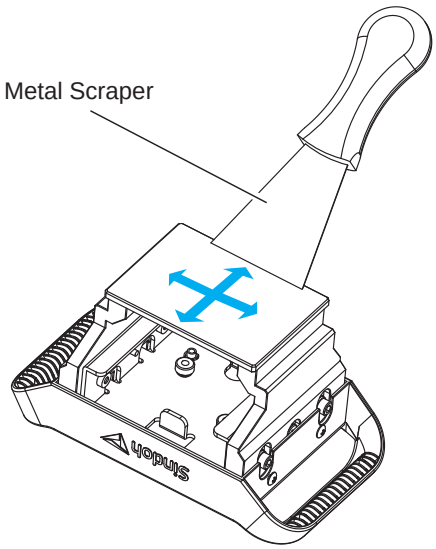

Important

- Please remove the platform first, and install it very last.
  Resin dropped or splashed from the platform may flow inside the machine.

2 Checking the resin tank

Check the resin tank and clean or replace it, if required.
For details on how to check and clean the resin tank, refer to “Resin Tank of 5. Maintenance”.

3 Installing the platform

Match the groove into the hole at the top of the platform, and fasten the locking screws.

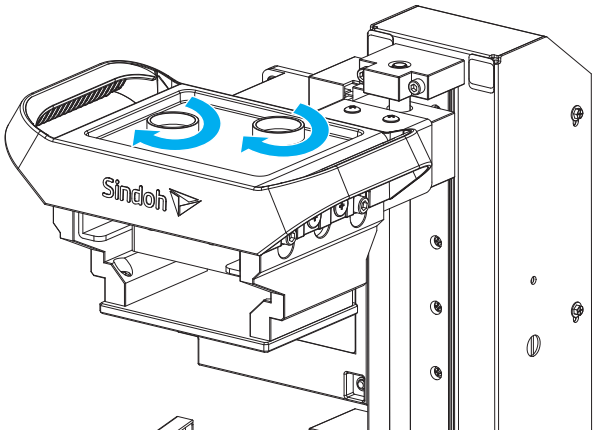

4 Closing the machine cover

Close the orange cover gently and completely with hands.

1.4 Enhancing Print Quality

1 Following the guideline for resin use

- The print quality is seriously influenced by the condition of resin. Take note of the expiration date as well as the storage and working temperatures marked on the resin.
- Resin in the resin tank needs to be filtered regularly using mesh filter. As printing goes over and over, contaminants and debris may increase in the resin tank. Please keep the resin clean by filtering regularly.
- It is recommended to filter the resin after approximately 10 times of printing.
  For details of filtering the resin, please refer to “Resin Tank of Chapter.5 Maintenance”.

2 Working site

- Operating the machine in a place exposed to shocks and vibrations may cause print failure.
  Use on a leveled place not affected by shocks and vibrations.
- Do not use it under conditions of dust or powder contamination. The optical system may be contaminated, or contaminants may be mixed with the resin.
- Use it under proper temperature and humidity. For the recommended machine working condition, refer to “Precautions of Before using the machine”.
- Avoid using it under direct sunlight or strong light.

3 Improving surface of print

- Air bubbles may trapped inside of the print.
  Placing the print to the rear side of the platform or setting layer thickness thinner (i.e. 0.1mm to 0.05mm) might help this problem.

2. When Printer Can’t be Turned ON

1. When the power is ON again, platform moves upward to initial position.
2. As described in “1. Checking Printed Output”, remove aborted print output from the platform, and clean the plat form and resin tank for the next job.

3. If problems Persist

1. Please refer to “Error Messages and Solutions and Problems and Troubleshooting” from Chapter 5. Maintenance”.
2. Please visit https://3dprinter.sindoh.com or contact your seller for further assistance and help.

Sindoh A1^{SD} Series
USER MANUAL

Maintenance

5

1. Machine Cleaning

⚠ Caution

- **Turn off the power for the machine cleaning. If resin or cleaning tools go into the machine while the power is on, it may cause a machine malfunction.**

1.1 Printer Interior Cleaning

During machine use, the resin may fall inside the machine.
If the resin goes into sensitive parts such as any optical parts, it may cause a malfunction or printing failure.
Clean the machine before and after using it or do as so periodically.

⚠ Caution

- **Wear nitril gloves during the cleaning which involves any risk of touching resin.**

1.2 Periodical Inspection

Oil/Grease Inspection

During manufacturing, grease/oil is applied to some mechanical parts, especially driving system.
After a period of time, grease and oil can dry and cause some noise during operation.
At least once a month, inspect the condition of grease and oil.
Especially, if printer begins to make a noise during operation, immediately check if grease and oil is applied properly. If necessary, contact the seller or service center for A/S.

1.3 Platform

If debris of print or contaminants exists on the surface of the platform or in its holes, platform leveling may not be performed perfectly. They may cause a degradation in the print quality or print failure.
For the best printing performance, clean the platform regularly and after each printing job.

⚠ Caution

- **Wear nitrile gloves before cleaning.**

1 Remove debris of print and contaminants remaining on the platform using an enclosed metal scraper. Clean every surface, including the upper surface, and any possible place to which resin may be applied.

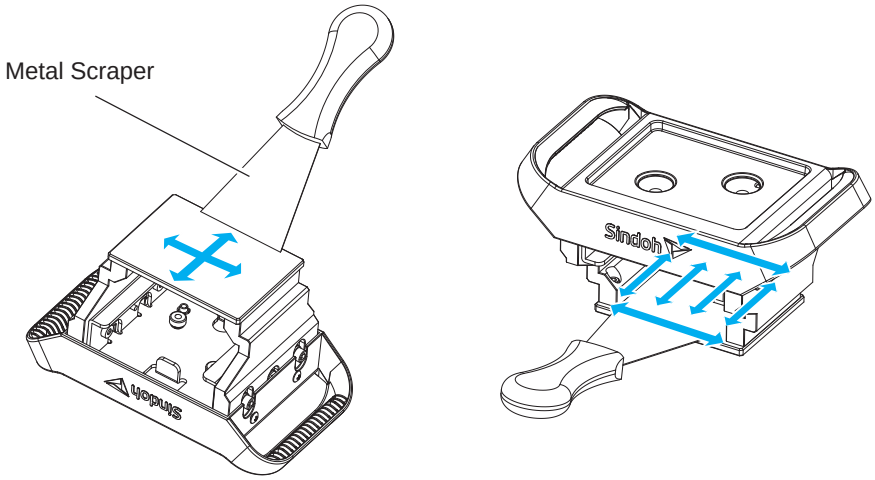

⚠ Caution

- **Use a metal scraper with care because the blade is sharp. You may be injured especially when scraping the platform.**

2 Clean remaining resin using a paper towel and IPA. Finally, clean all residual IPA using a dry paper towel.

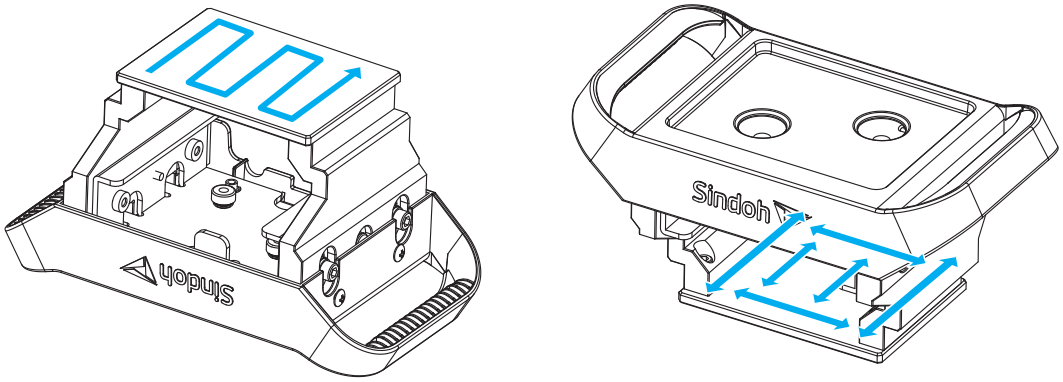

⚠ Caution

- **Do not place the IPA close to fire because it is flammable.**

3 If contaminants exist on a part where the platform is installed, platform leveling may fail, resulting in failed printing. Make sure that there are no contaminants remaining between the main body and the platform, and clean it using IPA and a paper towel if there is any.

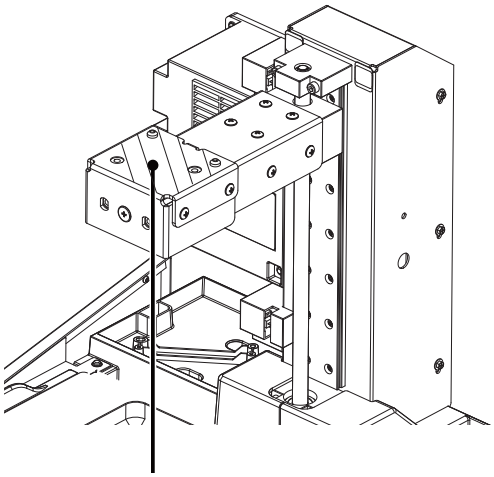

Assembly Surface
(Main Body)

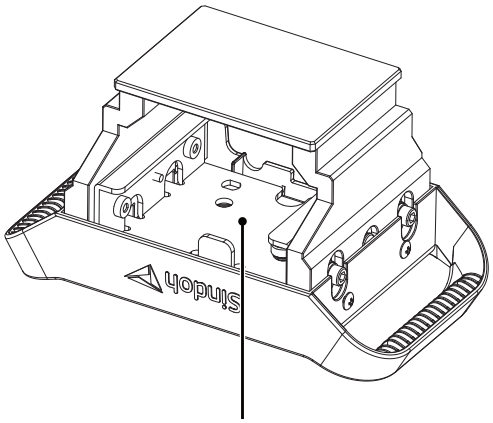

Assembly Surface
(Platform)

1.4 Resin Tank

The resin tank consists of aluminum die-casted walls, and a release film.
For the best print quality, it is very important to keep optical parts, such as the release film, clean and undamaged.
If the film are scratched, damaged, or contaminated, the LED beam will be scattered, reflected, or blocked.
These defects may cause degradation in the print quality or print failure.
For the best performance and life, ensure that the resin tank is maintained as directed.

Resin Tank's Life

The resin tank's life varies depending on the shape and size of prints, printing location, layer thickness, and resin type.
The releasae film needs to be replaced in case of a hole, scratch, tear, stretch, or any type of serious damage.

Checking the Resin Tank

⚠ Caution

- **Wear nitrile gloves before cleaning.**

Thoroughly check the resin tank in case the print quality is not good, print failure occurs, and the resin tank is changed.

1 Checking the inside of the resin tank

To check the inside of the resin tank, inspect it by scraping its bottom using the supplied rubber scraper. Look at the release film by carefully scraping resin from one side to the other of the resin tank.

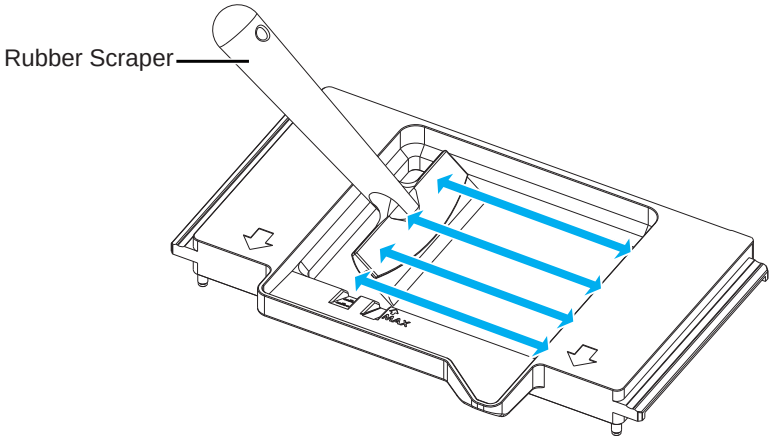

Important

- Do not scrape the bottom of the resin tank too hard. The release film can become loose or tear out.
- Do not scrape the surface of the release film using the metal scraper or any other sharp tool because it may seriously damage the release film.
- If resin remains on the blade of the rubber scrapper, blade can be deformed or resin on the blade can be cured, and as a result the performance of the blade would be deteriorated. After using rubber scrapper, clean up resin from the blade using IPA and paper towel.

Check for any of the following, and remove the contaminants. If serious damages, like holes, scratches, and so on, are found in the release film, repair or replace the resin tank.

- Residues of prints sticking to the release film
- Floating contaminants or cured resin debris in resin
- Pigmentation of the release film
- Damages, like holes, scratches, and so on, in the release film

2 Checking the outside of a resin tank

Upset the resin tank, and check if fingerprints, dirt, and scratches exist on the release film.

Cleaning the Resin Tank

⚠ Caution

- **Wear nitrile gloves before cleaning.**

1 Cleaning the release film

Use your fingers, a rubber scraper, or a gap gage mylar to remove residues of prints sticking to the release film and cured resin or particles floating in resin.

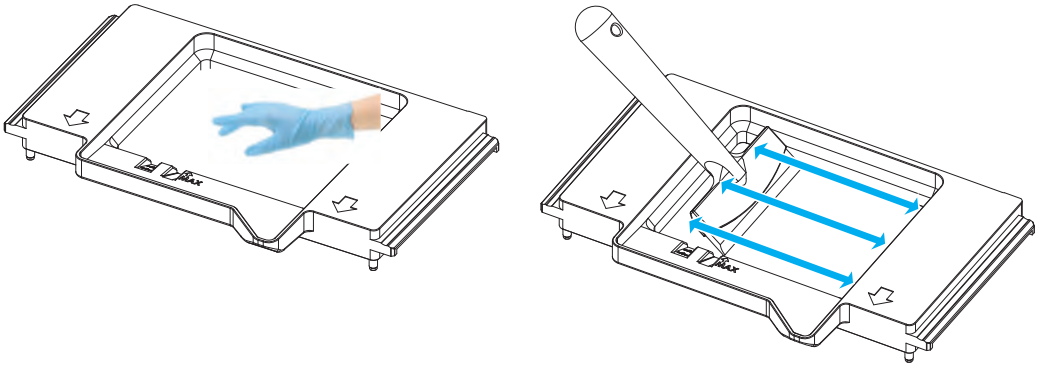

Important

- Do not scrape the bottom of resin tank hard. The release film can become loosen or tear out.
- Do not scrape the surface of the release film using the metal scraper or any other sharp tool because it may seriously damage the release film.
- If resin remains on the blade of the rubber scrapper, blade can be deformed or resin on the blade can be cured, and as a result the performance of the blade would be deteriorated. After using rubber scrapper, clean up resin from the blade using IPA and paper towel.

Reference

- If it is difficult to remove the residues of prints sticking to the release film, remove the resin from the resin tank, and then apply IPA around the residues and leave them for 1–2 min until the IPA permeates between the residues and the release film, facilitating removal.

2 Filtering remaining resin

If the residues of prints or contaminants cannot be perfectly removed with your fingers or a rubber scraper, filter the resin through the cleaning filter to remove them.

Pour the resin into a bottle with the cleaning filter to remove them. If resin does not flow down from the resin tank, lean the tank onto several layers of waste paper or paper towel, and use a rubber scraper to scrape down resin.

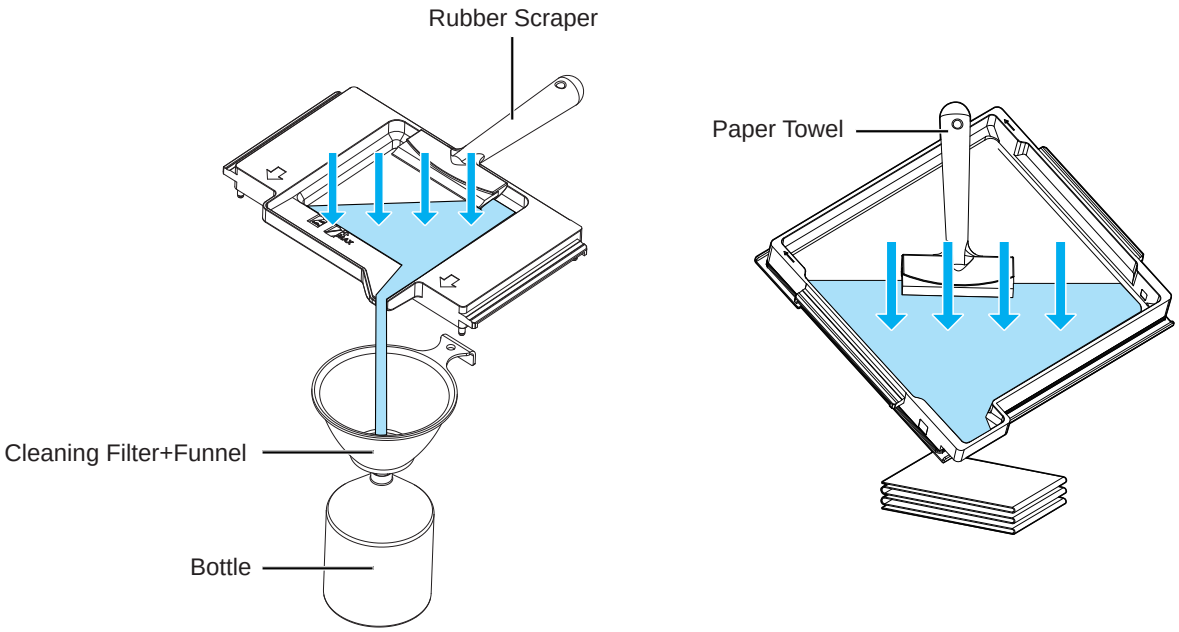

After pouring the resin into the bottle, remove the residues of resin, debris, and other contaminants using IPA and a paper towel.

⚠ Caution

- **Use a safe bottle made of stainless steel or transparent PE/PP plastic. If not, resin can be pigmented, or the bottle can melt down and mix with resin.**
- **Be careful not to drop or splash resin when pouring.**

Important

- Do not scrape the bottom of the resin tank hard. The release film can become loose or tear out.
- Do not scrape the surface of the release film using the metal scraper or any other sharp tool because it may seriously damage the release film.
- If resin remains on the blade of the rubber scrapper, blade can be deformed or resin on the blade can be cured, and as a result the performance of the blade would be deteriorated. After using rubber scrapper, clean up resin from the blade using IPA and paper towel.

3 Cleaning walls

Clean the walls made of aluminum die-casting with some IPA and paper towel.

1.5 LCD Protective Glass

The LCD protective glass is made of transparent glass to pass through LED beam with maximum efficiency.
In addition, it prevents external dust or resin from penetrating inside the machine.
For the best printing performance, it is very important that the LCD protective glass, through which the LED beam passes, is not scratched or contaminated. If the glass is damaged or contaminated, the LED beam may be cut off or diffused, resulting in print quality degradation or print failure.
In case of a print quality issue or print failure, check the status of the LCD protective glass, and clean it if necessary.

⚠ Caution

- **Wear clean nitrile gloves before starting cleaning.**

1 Removing the platform

Remove the platform to avoid dropping resin or other contaminants on it.
Open the orange cover, and remove the two platform locking knobs to take out the platform from the machine.

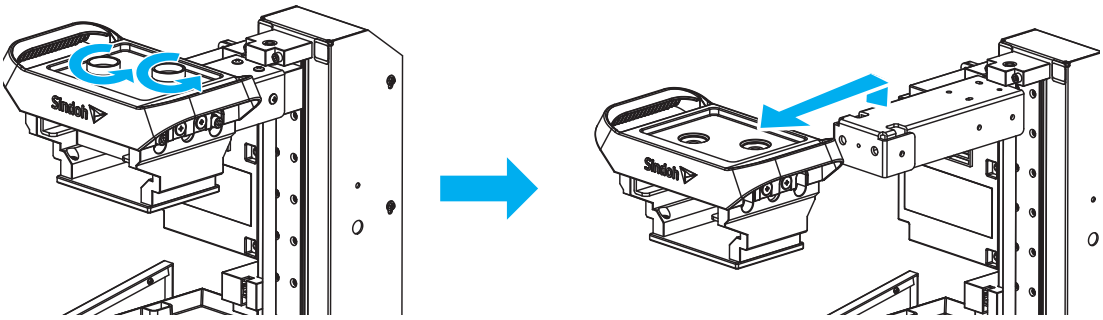

2 Removing the resin tank

Release the locking handles, and then lift it up.

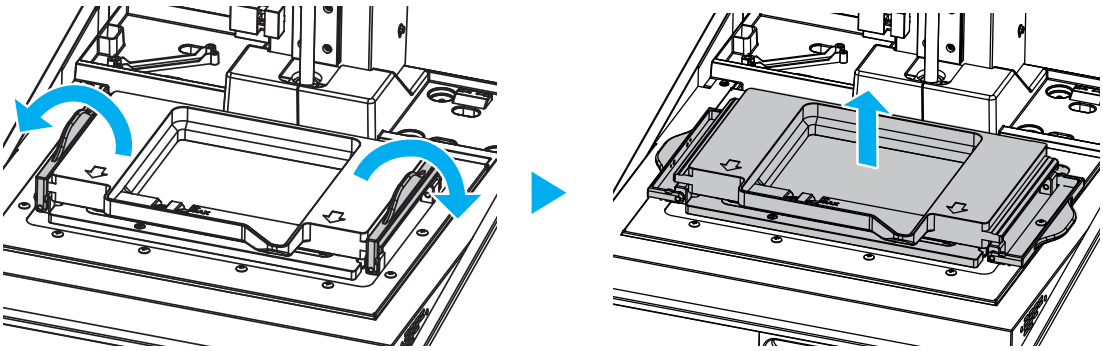

⚠ Caution

- **If the resin tank is still filled with resin, be careful not to drop or splash resin when you remove it from the tank or try to move it.**

3 Cleaning the protective glass

The LCD protective glass needs to be cleaned only with IPA or a dedicated cleaner for glass and a clean microfiber cloth. Non-microfiber cloth or paper towel can scratch the LCD protective glass.

① Dampen the microfiber cloth with IPA, and wipe it from top to bottom without stopping.
② Repeat this procedure until cleaning is finished.
③ To prevent dust or dirt from reattaching to the LCD protective glass, fold the microfiber cloth to use a new surface each time you wipe.

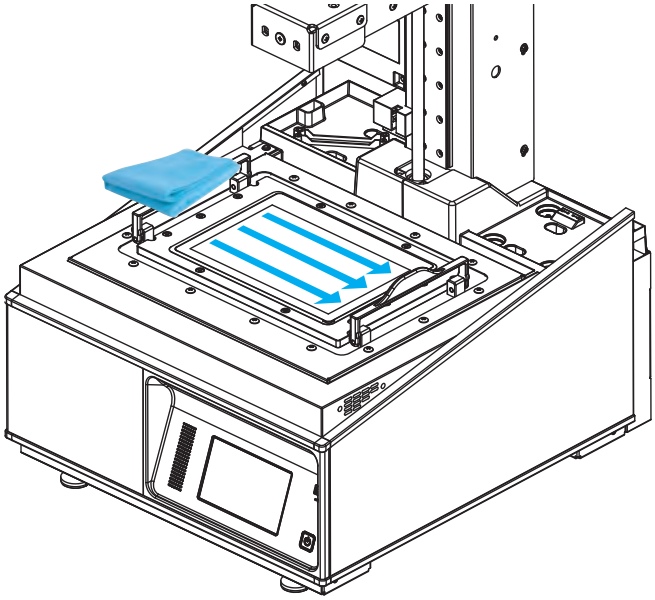

4 Checking the LCD protective glass

Check LCD the protective glass by using reflected light.

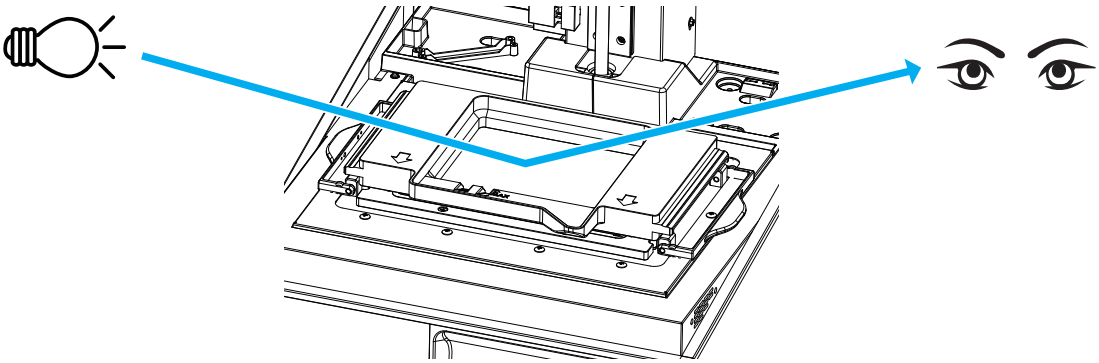

5 Installing the resin tank and platform back

Install the resin tank and platform back to their original positions.

⚠ Caution

- **If the resin tank is still filled with resin, be careful not to drop or splash resin when you remove it from the tank or try to move it.**

1.6 Orange Cover

The orange cover is made of translucent orange acryl material to allow users to check the situation inside the device. Orange acryl is a specially selected material to safely shield the LED beam.
To prevent users from accidentally using the machine with the cover open, double safety systems are installed. It is designed to stop temporarily for the safety of a user because if the cover is opened during printing, it may cause reduced quality or failed printing.

Opening the Orange Cover

To open the orange cover, insert your fingers into the bottom of the cover, and lift it up.

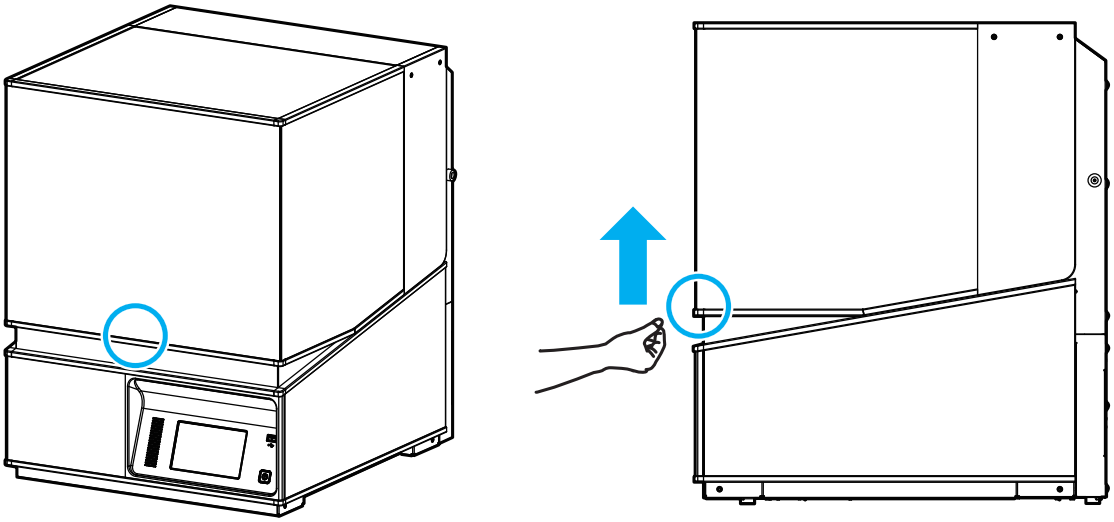

Reference

- Lift the center part of the cover to easily open it. If you lift the left or right part, force is dispersed, which needs more force than the center.

Closing the Orange Cover

To close the orange cover, grasp the top center of the cover using your fingers, and pull it down.
If you pull the cover slightly forward, it will automatically fall down slowly because of the weight of the cover itself.

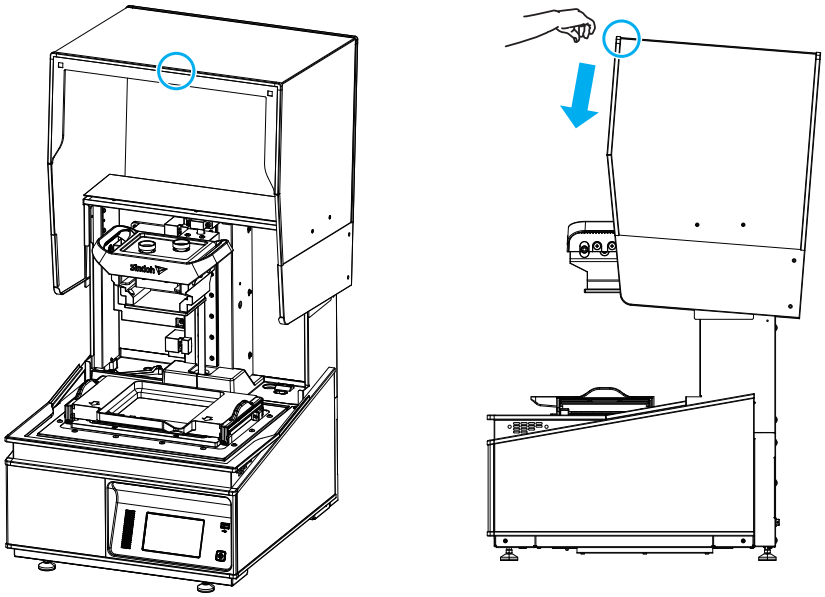

Reference

- Pull the center part of the cover to easily close it. If you pull the left or right part, force is dispersed, which needs more force than the center.

Cleaning the Orange Cover

The orange cover needs to be cleaned only with a clean microfiber cloth and a dedicated cleaner for acryl material, for example, NOVUS No. 1 Plastic Clean and Shine. Non-microfiber cloth or paper towel can scratch the orange cover.

① Spray cleaner to the surface of the orange cover once or twice, and wipe it from one side to the other without stopping.
② Repeat the procedure until cleaning the surface is finished, and then clean the other surfaces.
③ To prevent dust or dirt from reattaching to the orange cover, fold the microfiber cloth to use a new surface each time you wipe.

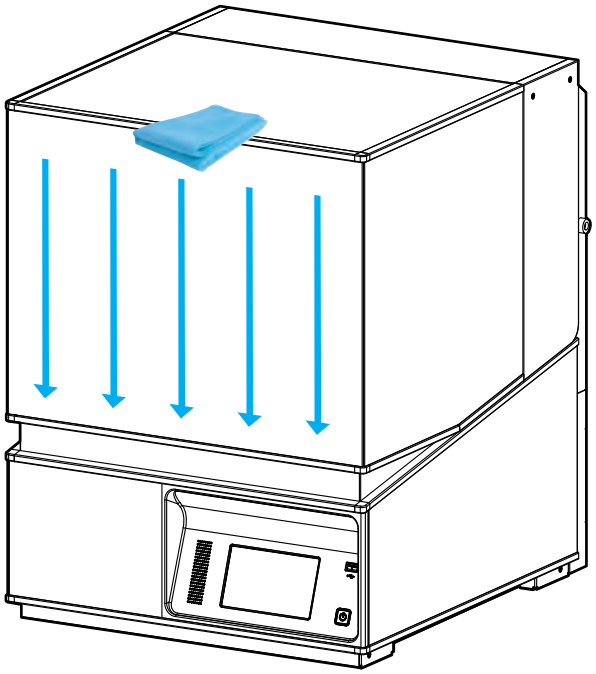

⚠ Caution

- **Never use any alcohol- (including IPA) or ammonia-based cleaner to clean the orange cover. These chemicals may cause damage.**

2. Error Messages and Solutions

Message	Description	What To Do
Booting **Please wait until booting is complete.**	On the first boot, the user must wait until the booting process is finished.	Once the boot-up process is finished and the machine is ready, this message disappears automatically.
Error **EC 301**	Error with the main cooling fan in the rear.	Check if there is any foreign substance that interferes with the fan operation, and remove it. If the problem persists after rebooting, request.
Error **EC 302, 303, 304**	Error on the cooling fans inside the machine.	Reboot the machine. If the problem persists after rebooting, request A/S.
Error **EC 312**	During printing, a chamber temperature higher than 40°C has been detected for more than 10 times.	Reboot the machine. If the problem persists after rebooting, request A/S.
Error **305,306,307**	Error with the fan.	Reboot the machine. If the problem persists after rebooting, request A/S.
Error **EC 511, 512, 513, 516, 517**	Problem with the platform transport motor.	Check if there is any foreign substance that interferes with the platform driving parts, and remove it. Reboot the machine. If the problem persists after rebooting, request A/S.
Notification 311	The target temperature is not reached within 60 min of operation.	Wait until the target temperature is reached, or press **[Start Now]** to start printing. If problem persists even though temperature of the site satisfies the recommended temperature condition(20℃~30℃), request A/S.

3. Problems and Solutions

3.1 Actions in Case of a Printing Failure

Inevitably, printing can fail. In the event of a printing failure, a small piece of missing or incompletely cured resin will float in the resin tank or remain attached to the release film.
These contaminants are generated more in case of a printing failure rather than successful printing. In case of a printing failure, clean the resin tank according to the following instructions.

⚠ Caution

- **Wear clean nitrile gloves before cleaning.**

Removing Failed Print

For details on how to remove failed print, please refer to “Resin Tank of 5. Maintenance”.

⚠ Caution

- **Use your fingers,rubber scraper and gap gage mylar remove residues of prints sticking to the release film and cured resin or particles floating in resin while preventing any scratching or stretching of the release film.**

Cleaning the Resin Tank and Platform

For details on how to clean the resin tank and platform, please refer to “Resin Tank and Platform sections of 5. Maintenance”.
In case of a printing failure, more debris or contaminants can exist in the resin. It is recommended that you should use a filter to remove residual contaminants.

Reference

- If the printing fails repetitively, perform leveling again for the platform and resin tank. For details on how to level the platform, refer to “Auto Platform Leveling or Platform Leveling of 3. UI Menu Function”.

Resin Tank Release Film Replacement

The release film of the resin tank is a consumable product and should be replaced if the print quality deteriorates or the print fails repeatedly. For how to replace the release film, see “Chapter 5. Maintenance Resin Tank ”.

When Reusing Resin, Mix with Unused One

Resin that has been stored for a long time or used many times can degrade print quality.Recommend to reduce the percentage of reused resin by adding unused resin

3.2 If Noise is Generated from the Lead Screw of Platform

Noise can be generated from the lead screw of platform if foreign matters such as resin, etc is located to the lead screw.
To remove the noise, gently wipe the noise generating area of the lead screw using clean microfiber cloth in order to get rid of foreign matters.

⚠ Caution

- **Lubricant is applied to the lead screw to help the movement of platform.**
  Please clean the lead screw very gently to remove foreign matters only.
  If problem persists after cleaning, please contact a local service center.

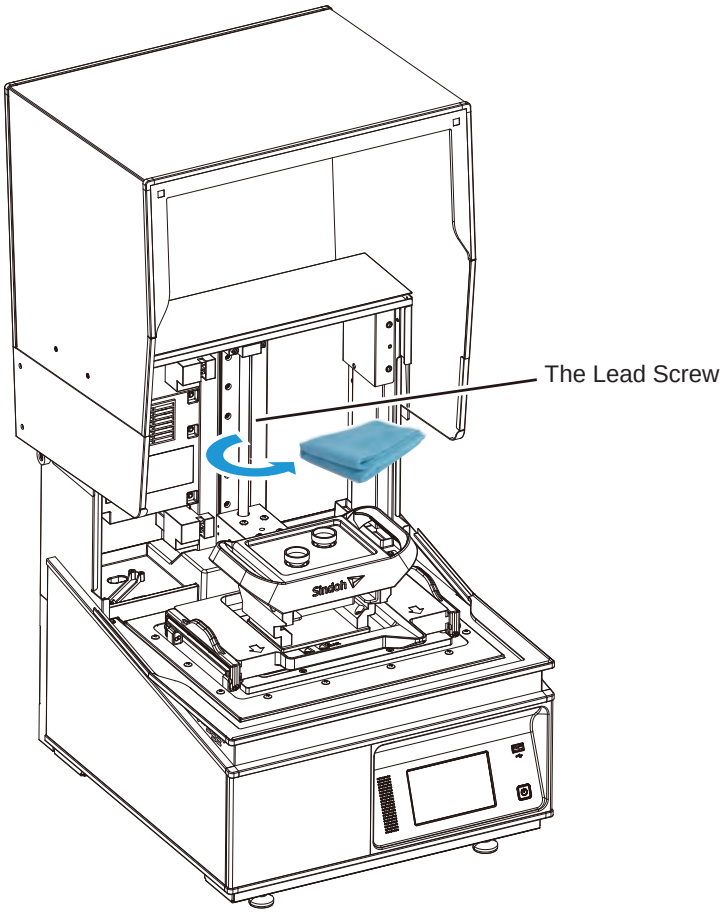

4. Replacing consumables and important components

4.1 Replacing the Platform

⚠ Caution

- **Wear clean nitrile gloves before cleaning.**

1 Removing the current platform

Open the orange cover, and remove the two platform locking knobs by turning in counterclockwise direction.

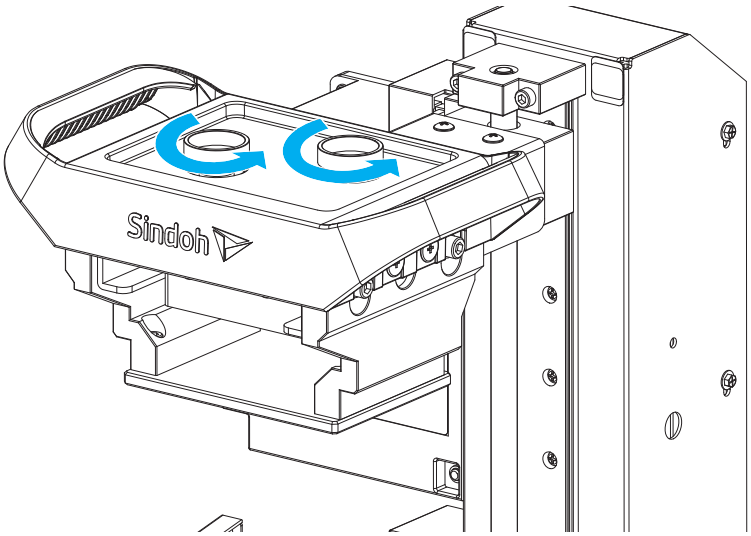

Hold the platform with both hands grasping the handles, and remove it from the machine.

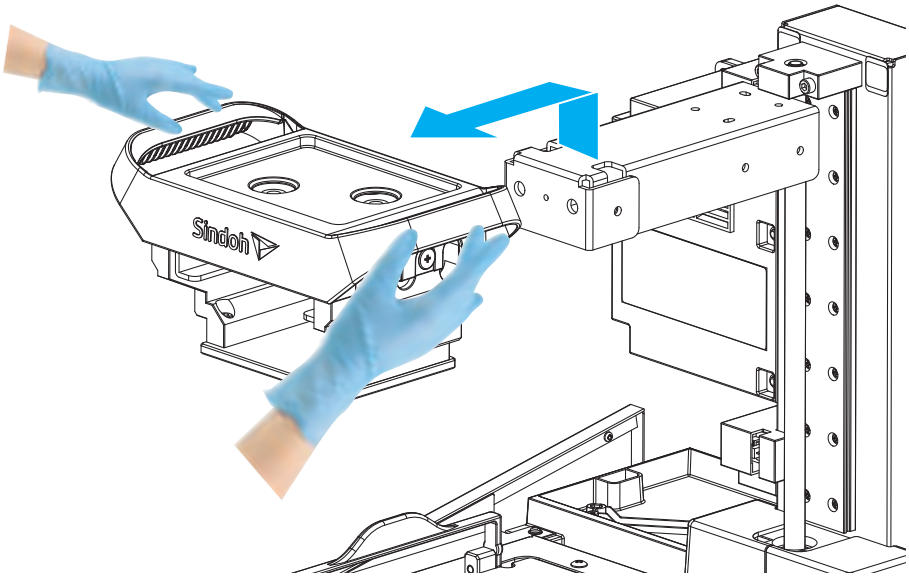

⚠ Caution

- **Be careful not to drop the platform during installation or removal. If the platform is dropped on the machine or user by accident, the dropping impact may result in damage to the device or injury to the user.**

2 Installing a new platform

Place the new platform on the machine in the exact reverse order of removing the platform, and secure it with two locking knobs.

Important

- When placing a platform on the mount, align the two protrusions of the fixed part. If they are not aligned, the platform will not be installed properly.

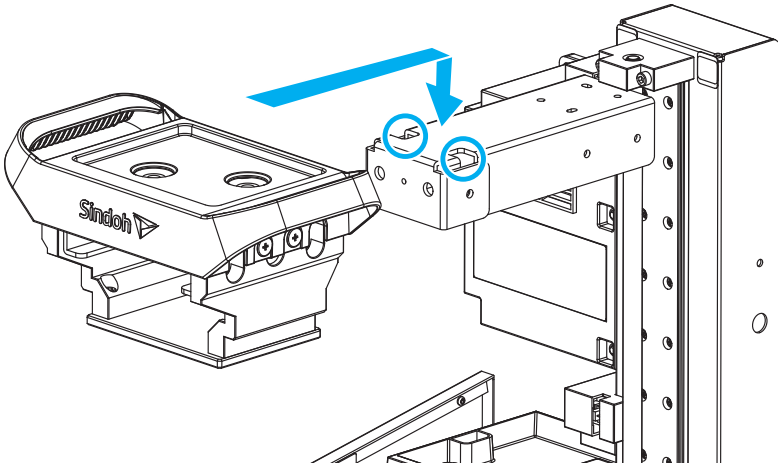

3 Leveling the platform

Once the new platform is installed, proceed with the platform leveling process to adjust the alignment between the platform and the resin tank. For details on platform leveling, refer to “Auto Platform Leveling or Platform Leveling of 3. UI Menu Function”.

4.2 Replacing the Resin Tank

Replacing the Resin Tank

1 Removing the current resin tank

Open the orange cover, and then remove the resin tank in the following order:

① Turn the locking levers that hold both sides of the resin tank outward to unlock them.

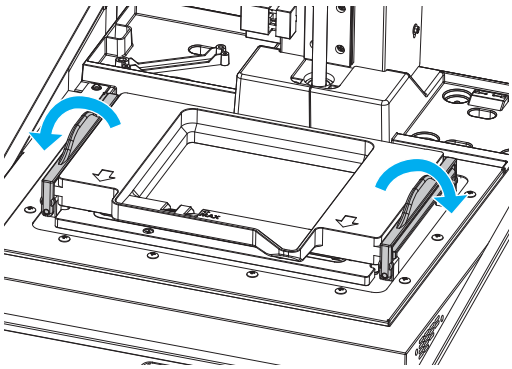

② To remove the current resin tank, pull the resin tank forward, and lift it up.

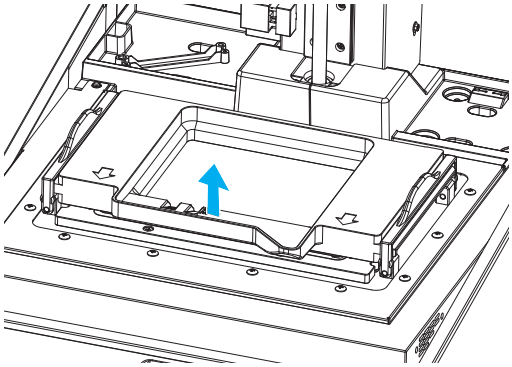

2 Removing remaining resin

If resin remains in the resin tank, pour all remaining resin through the filter and store them in a bottle.
If resin does not flow down from the resin tank, lean the resin tank onto several layers of waste paper or paper towel, and use a rubber scraper to scrape down resin. Repeat this procedure.

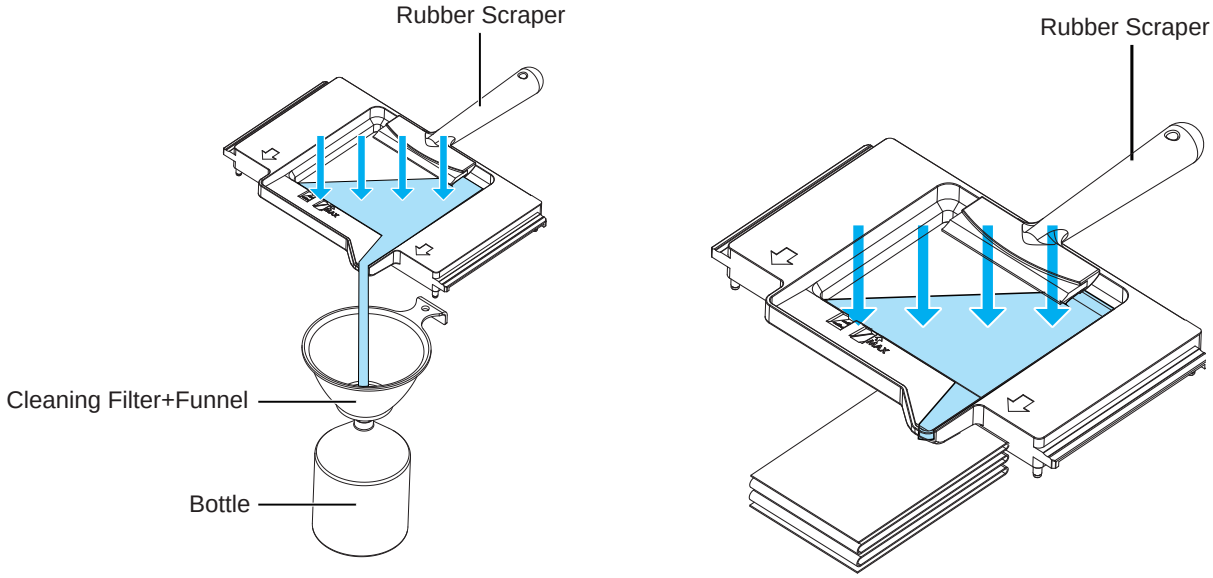

⚠ Caution

- **Use a safe bottle made of stainless steel or transparent PE/PP plastic. If not, resin can be pigmented, or the bottle can melt down and mix with resin.**
- Be careful not to drop or splash resin when pouring.

3 Installing a new resin tank

Install the resin tank in the following order:

① Place the resin tank between the locking levers.

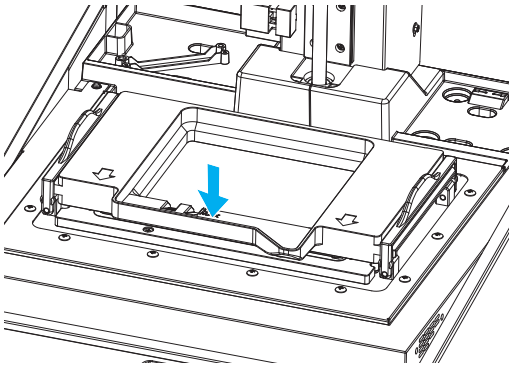

② Turn the locking levers inward to secure the resin tank.
Turn them until they are locked.

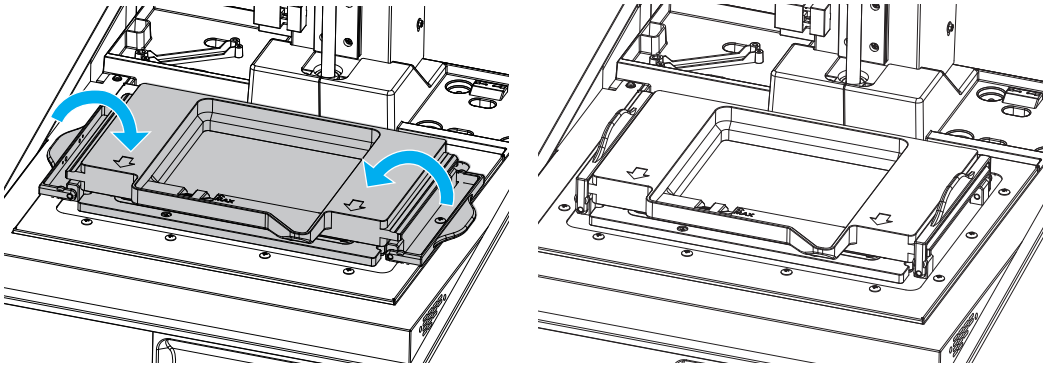

4 Leveling the platform

Once the new resin tank is installed, proceed with the platform leveling process again to adjust the alignment between the platform and resin tank. For details on platform leveling, refer to “Platform Leveling or Auto Platform Leveling of 3. UI Menu Function”.

Replacing the Release Film

⚠ Caution

- **Wear clean nitrile gloves before cleaning.**

If the release film is severely damaged, replace it according to the following procedure. Contact your local dealer regarding ordering a film replacement kit.

1 Cleaning the resin tank

If the release film is replaced without cleaning the resin tank, resin may enter the gaps of the tank, where it is difficult to remove the resin during disassembly. Make sure to clean the tank before replacing the release film. For more details on how to clean the resin tank, refer to “1.4.3. Cleaning Resin Tank”.

3 Removing the sealing bracket

Remove the sealing bracket by turning 36 sealing bracket fixing screws counterclockwise with the cross head screwdriver.

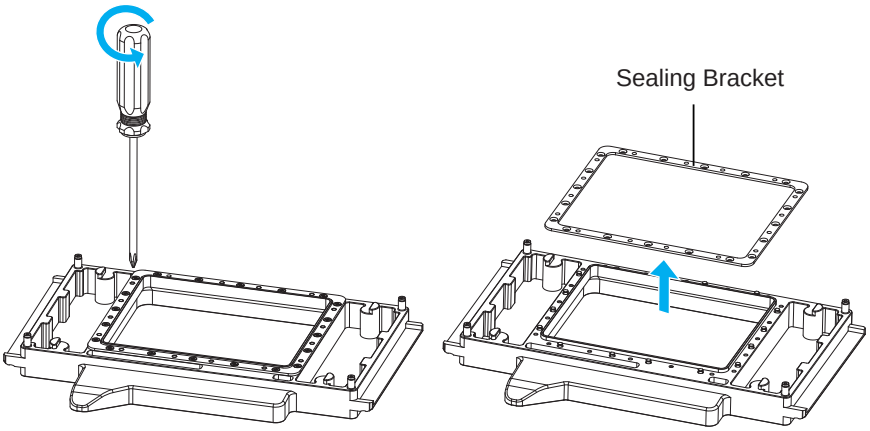

4 Removing the release film

After removing the sealing bracket, remove the release film.
scrape the release film.

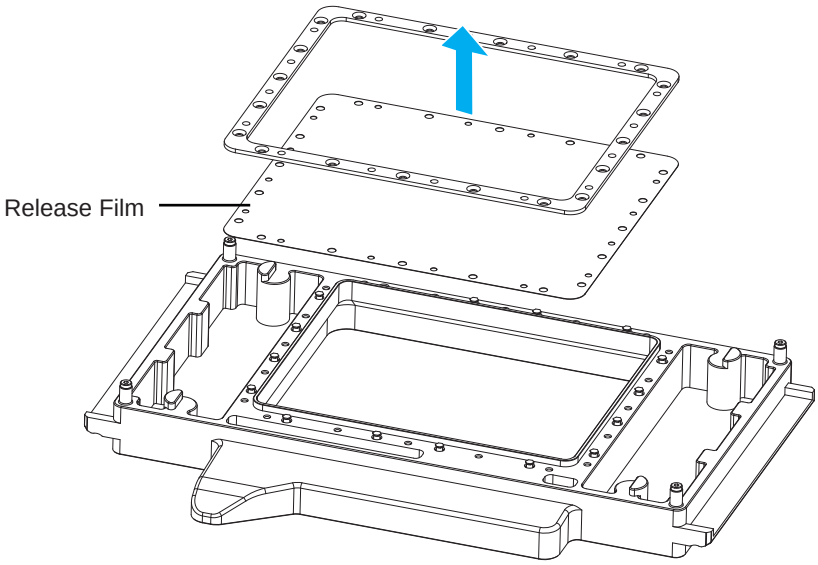

5 Assembling a new release film

Prepare the new release film. The protection sheets are attached to both sides of the film. Remove them gently. A new replacement release film is put on a sealing bracket boss and place this sealing bracket with a release film on the resin tank.

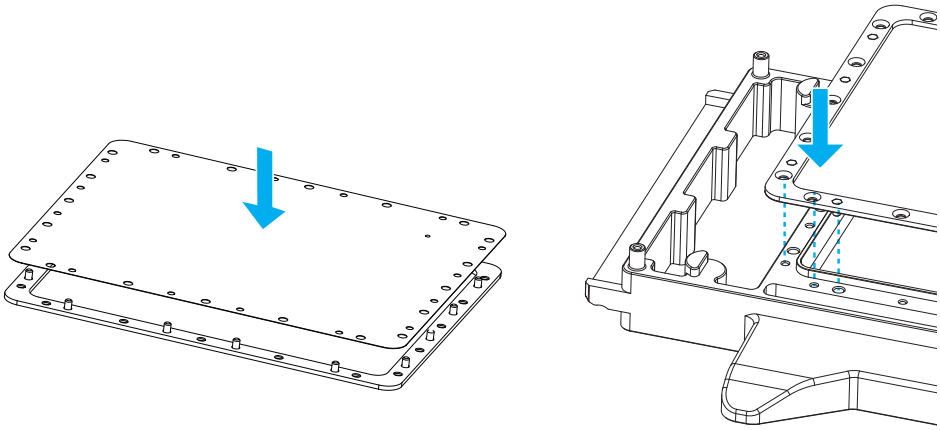

6 Assembling the sealing bracket

Proceed with the remaining process in the reverse order of disassembly.
Put the sealing bracket on top and fasten 36 fixing screws back.

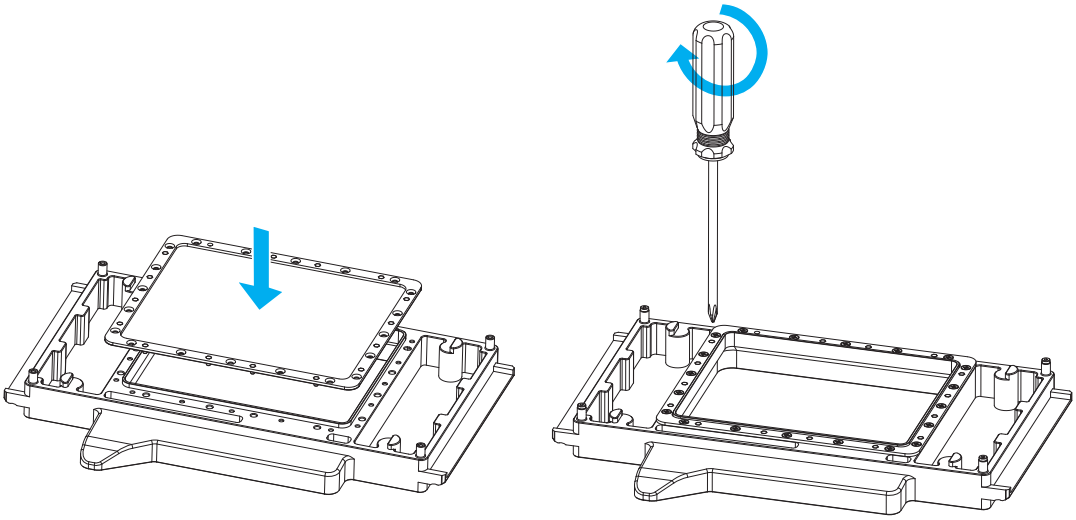

Important

- When the sealing bracket is assembled, please secure the bolts in the following order.
  1). Half-fasten 4 bolts (①,②,③,④) in order of number (not fully fastened)
  2). 3bolts (②,③,④) are Half-fastened counterclockwise from ① (not completely fastened).
  3). Completely tighten all bolts counterclockwise starting from bolt ①

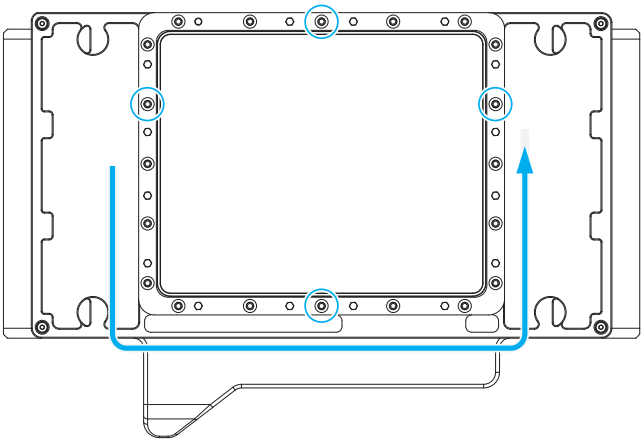

7 Installing the resin tank

Check if any contaminants, fingerprint, or dirt remain in the release film. If everything is OK, install the resin tank.

8 Leveling the platform

Once the resin tank is installed, proceed with the platform leveling process again to adjust the alignment between the platform and the resin tank. For details on platform leveling, refer to “Platform Leveling or Auto Platform Leveling of 3. UI Menu Function”.

Notice to Users

Type	Notice
• **Class A equipment (commercial telecast equipment)**	This equipment is a Class A EMC (electromagnetic compatible) equipment, and should not be used in household locations

※ This Product is a Class A equipment.

Sindoh

www.sindoh.com