Sindoh
Unmistakable

D330A Series

Quick Start Guide

- Before using this product, please read the user's manual and keep it well.

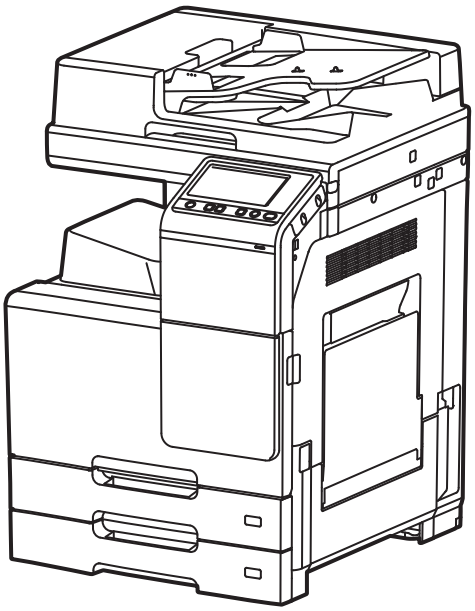

Safety Instructions

Be sure to observe the following instructions when using the device.

⚠ **Warning : Failure to observe the instructions may lead to death or serious injury.**

- Directly plug the power cord in the receptacle on the wall. Do not use extension cord.
- If the power cable or plug is worn or damaged, pull out the power plug.
- In order to prevent electric shock or exposure to laser radiation (in case of a laser device), do not remove the cover or screw which is not stated in the user manual.
- Turn off power and pull out the power plug in the following situations;
  - If something is spilled on the device
  - When considering the service or repair request on the device
  - When the device cover is damaged
- In case of a device using toner, do not burn the spilled toner or the waste toner. If a toner particle is exposed to the screen, it may be ignited.
- In case of disposal, contact our company's seller use the proper collection place.
- In case of not using the product for a long time or when leaving the office after business hours, turn off the power. Otherwise, it may cause an abrupt fire accident.

⚠ **Caution : Failure to observe the instructions may cause serious and slight injuries or property damages.**

- Protect the device from a humid or wet condition including rain, snow, and so on.
- Pull the power cord off from the receptacle on the wall before moving the device. Be careful not to damage the power cord while the device is being moved.
- Be sure not to pull the cable when pulling the power cord off from the wall receptacle. Be sure to pull out with the plug.
- Be sure not to have a clip, a staple, or another small metal object fell inside the device.
- Be careful of a safety accident when servicing the inside of the device including the removal of paper jam, cleaning of the inside of the device, and so on.
- In case of the device using toner, keep the toner and the toner container in the place where cannot be reached by a child.
- Do not dispose of the device or consumables in the place treating household waste. In case of disposal, contact our company's seller use the proper collection place.
- The inside of the device may be very hot. Do not touch the part with the"Careful! Very Hot!" label attached or the spot around the part. Otherwise, it may cause burn.
- Our company's product conforms to the quality standards and performance. It is recommended to use only the genuine parts possibly purchased from an authorized distributor.

Before Using the Product

Thank you for purchasing our product.

This user manual is intended for first-time user of this MFP as well as MFP administrators.

This manual explains functions and operation procedures of MFP, user tips and important warnings, maintenance tips, and simple troubleshootings.

Read this manual carefully to fully and effectively use the device. For maintenance and troubleshooting, basic technical knowledge for the device will help users.
For your maintenance and troubleshooting needs, follow the instructions specified in the manual.
If any unexpected errors or troubles occur, make sure to contact one of our service centers for help.

Prohibition and limitation

1. The details of the user manual can be changed without a prior notice.
   Our company is not responsible for the direct and/or indirect loss or damages caused by results of handling or operating the product in any case and for the results occurring from user's negligence.
2. The act of duplicating or printing a bill, revenue stamp, bond, share certificate, bank draft, check, passport, and driver's license distributed at home and abroad is prohibited according to a law.
3. The copyrighted literary works such as books, cores, figures, maps, drawings, and photos can be duplicated and used for personal use or household use and within the same scope. In other cases, it is prohibited according to a law.
4. The above details present only a part of the applicable laws and regulations. The details of the law are not stated as they are. Our company is not responsible for correctness and completeness. Receive a legal consulting service to check if the duplication or printing of an object is legal.
5. The font used for device GUI and user manual is NANUM font, provided by NAVER.

Table of contents

Chapter 1. Safety Information

1. **Introduction** ---------- *1-2*
2. **Environmental information** ---------- *1-3*
   - Environmental benefits of power management ---------- *1-3*
   - Recycled paper ---------- *1-3*
   - Duplex ---------- *1-3*
3. **Safety information** ---------- *1-4*
   - Warning and precaution symbols ---------- *1-4*
   - These are some of major exemplary graphical symbols ---------- *1-4*
   - <Power source connection> ---------- *1-5*
   - <Installation> ---------- *1-6*
   - <Using the product> ---------- *1-8*
   - <Consumables> ---------- *1-9*
4. **Regulation notices** ---------- *1-11*
   - For Brasilia users/ Para usuários de Brasília ---------- *1-12*
   - Laser safety ---------- *1-12*
   - Internal laser radiation ---------- *1-12*
   - CDRH regulations ---------- *1-13*
   - For European users ---------- *1-13*
   - Laser safety label ---------- *1-13*
   - Ozone release ---------- *1-14*
   - Acoustic noise (for German users only) ---------- *1-14*
   - Notification for California customers ---------- *1-14*
   - Recycling batteries (for Taiwan users only) ---------- *1-14*
   - For EU member states only ---------- *1-15*
   - Telephone cable (for users in countries subject to class B regulations) ---------- *1-15*
   - USB host ---------- *1-15*
   - Graphic symbols used on this machine ---------- *1-15*
5. **Special notice to user** ---------- *1-17*
   - For U.S.A. ---------- *1-17*
   - EMI(Electromagnetic Interference) Notice ---------- *1-18*
   - WLAN Notice ---------- *1-18*
   - For Europe ---------- *1-19*
   - For New Zealand ---------- *1-19*

6. **Space requirements** ---------- *1-20*
7. **Operation precautions** ---------- *1-21*
Power source ---------- *1-21*
Operating environment ---------- *1-21*
Storage of copies ---------- *1-21*
Data stored in this machine ---------- *1-21*
8. **Legal restrictions on reproduction** ---------- *1-22*
9. **Caution notations and labels** ---------- *1-23*

Chapter 2. Before Using This Machine

1. **Environmental initiatives** ---------- *2-2*
2. **Intended use of office MFP devices** ---------- *2-3*
Intended use ---------- *2-3*
Impermissible operating conditions ---------- *2-3*
Exclusion of liability ---------- *2-3*
3. **Target groups** ---------- *2-4*
4. **Introduction to user's guide** ---------- *2-5*
Quick Guide ---------- *2-5*
HTML User's Guide ---------- *2-5*
5. **Symbols and notations used in this manual** ---------- *2-6*
6. **Administrator password** ---------- *2-7*

Chapter 3. How to Use the HTML User's Guide About

About the HTML User's Guide ---------- *3-2*
Operating environment ---------- *3-2*

Chapter 4. About This Machine

1. **Optional components** ---------- *4-2*
List of optional components ---------- *4-2*
List of other optional components ---------- *4-4*

2. Name of each component (main unit) ---------- *4-6*
Front ---------- *4-6*
Side/rear ---------- *4-7*
3. Power supply ---------- *4-8*
Turning the power on and off ---------- *4-8*

Chapter 5. About Panels

1. Control Panel ---------- *5-2*
2. Touch Panel ---------- *5-3*
Home screen ---------- *5-3*
3. Login methods ---------- *5-5*
When user authentication is enabled: ---------- *5-5*

Chapter 6. Loading the Original and Paper

1. Load the original ---------- *6-2*
1.1 Loading the original into the ADF ---------- *6-2*
1.2 Placing the original on the Original Glass ---------- *6-2*
2. Loading paper ---------- *6-3*
2.1 Loading paper in Tray 1 to Tray 2 ---------- *6-3*
Applicable paper types ---------- *6-3*
How to load a paper ---------- *6-3*
2.2 Loading paper into the Bypass Tray ---------- *6-4*
Applicable paper types ---------- *6-4*
How to load paper ---------- *6-4*
2.3 Loading envelopes ---------- *6-5*
2.4 Loading postcards ---------- *6-7*
2.5 Loading label sheets ---------- *6-8*
2.6 Loading index papers ---------- *6-9*

Chapter 7. Available Operations in this Machine

1. How to copy ---------- *7-2*

Basic copy operations ---------- *7-2*

2. How to print ---------- *7-4*

Basic print operations ---------- *7-4*

3. How to print ---------- *7-5*

Basic scan operations ---------- *7-5*

4. How to fax ---------- *7-7*

Basic fax operations ---------- *7-7*

Chapter 8. Registering a Destination

1. How to register a destination ---------- *8-2*

Registering a fax address ---------- *8-2*

Registering E-mail address ---------- *8-3*

Chapter 9. Read this if You Have a Problem

1. Main messages and remedies ---------- *9-2*

1.1 Checking a notification message on the Touch Panel ---------- *9-2*

1.2 Screen that appears when a paper/staple jam has occurred ---------- *9-3*

1.3 When an error message appears ---------- *9-4*

2 . When the Touch Panel is not visible ---------- *9-5*

3. When printing quality has deteriorated ---------- *9-6*

Cleaning the Original Glass and roller ---------- *9-6*

Cleaning the Slit Scan Glass ---------- *9-7*

Cleaning the Print Head Glass ---------- *9-8*

4. When a message appears to replace consumables or carry out cleaning ---------- *9-10*

4.1 About Developing Unit ---------- *9-10*

4.2 About Imaging Unit ---------- *9-10*

4.3 About Drum Unit ---------- *9-10*

Replacing a Drum Unit ---------- *9-11*

4.4 About Toner Cartridge ---------- *9-12*
When toner is running out in the Toner Cartridge ---------- *9-12*
When it is time to replace a Toner Cartridge ---------- *9-12*
Replacing a Toner Cartridge ---------- *9-13*
4.5 About Waste Toner Box ---------- *9-14*
Replacing a Waste Toner Box ---------- *9-14*
4.6 About Staple Cartridge ---------- *9-16*
Replacing a Staple Cartridge (for Finisher FS-533) ---------- *9-18*
Replacing a Saddle Staple Cartridge (for Finisher FS-539 SD) ---------- *9-20*
4.7 About hole-punch scraps ---------- *9-24*
Punch scrap processing (for Finisher FS-539 / Finisher FS-539 SD) ---------- *9-24*
Punch scrap processing (for Finisher FS-533) ---------- *9-25*

D330A Series
Quick Start Guide

Safety information

1

1. Introduction

This **[Quick Guide]** uses illustrations to describe operating procedures for the most commonly used functions in an easy-to-understand way. Start by using this manual to become proficient with the use ful functions that this machine offers. For details on the various functions, refer to the User's Guides on the User's Guide CD included with this machine.
In order to operate the machine safely and properly, be sure to read thesafety information on page 1 of this manual before use. In addition, this manual contains the following information. Be sure to read the manual before using the machine.

- Items that must be observed to use the machine safely
- Information regarding product safety
- Precautions when using the machine

The illustrations and screens used in this manual may appear slightly different from views of the actual equipment and screens.

Tips

- Please keep this manual as well as the attached CD/DVD in a safe place where you can access them easily.

2. Environmental information

Environmental benefits of power management

Electricity consumption of a device depends on both its properties and the way of using the device. Suitable power management setting offers you resource saving usage way.
By setting the time to go into power saving modes (e.g. sleep mode) shorter (or optimal), electricity consumption can be reduced.

Recycled paper

This product can print on recycled paper and environmental stewardship initiatives certified paper which complies with European standard EN 12281 as well as virgin paper.
In addition it can print on lighter paper, 64g/m2 for example. Using such light paper contributes to resources-saving.

Duplex

printing With a product which has a duplex unit, you can print on both
sides of paper automatically. Using this function leads to reducing consumption of natural resources and your cost. Attached printer driver provides this duplex printing function as initial setting in your computer (The setting can be changed after installation manually).

3. Safety information

This section contains detailed instructions on the operation and maintenance of this machine.
To achieve optimum utility of this device, all operators should carefully read and follow the instructions in this manual. Please read the following section before connecting the machine to the supply.
It contains important information related to user safety and preventing equipment problems.
Make sure that you observe all of the precautions that appear in different sections of this manual.

Reference

- Some parts of the contents of this section may not correspond with the purchased product.

Warning and precaution symbols

Be sure to observe the safety precautions.This manual contains the instructions that should be strictly observed at all times to prevent injury to yourself and other persons as well as damage to property.
Injuries and damage that might be caused by using the product improperly are classified according to the following symbols.

⚠ Warning

- **Improper handling can cause serious injury or death.**

⚠ Caution

- **Improper handling can cause minor injury or damage to houses and property.**

These are some of major exemplary graphical symbols.

Symbols/ Notations	Description	Symbols/ Notations	Description	Symbols/ Notations	Description
	General prohibition		Do not disassemble		Do not touch
	General instruction		Ground/Earth		Unplug from outlet
	General precaution		High temperature		Electri-cal shock hazard

<Power source connection>

Graphic symbols	Descriptions	
WARNING	Do not use any power cord other than the one supplied in the package or attached on the products. If a power cord is not supplied, use only the power cord and plug that are specified in the user documentation. Failure to use this cord could result in a fire or electrical shock. If the power cord supplied in the package cannot be used in the country where this product was sold, use a power cord that meets the following conditions or contact your Technical Representative. – The power cord has voltage and current rating appropriate for the rating plate on this machine. – The power cord meets regulatory requirements for the area. – The power cord is provided with grounding pin/ terminal.	
	Do not use the power cord to other products. Failure to do that could result in a fire or electrical shock.	
	Do not scratch, abrade, place a heavy object on, heat, twist, bend, step on, pull on, or damage the power cord. Use of a damaged power cord (exposed core wire, broken wire, etc.) could result in a fire or breakdown. Should any of these conditions be found, immediately turn OFF the power switch, unplug the power cord from the power outlet, and then call your authorized service representative.	
	Do not use the power source voltage other than being specified on the machine. Failure to do that could result in a fire or electrical shock.	
	Do not use a multiple outlet adapter to connect any other appliances or machines. Use of a power outlet for more than the marked current value could result in a fire or electrical shock.	
	Do not use an extension cord. Use of an extension cord could cause a fire or electric shock. If the power cord furnished with the product is not long enough to be plugged into a wall outlet, contact your Technical Representative.	

Graphic symbols	Descriptions	
WARNING	Do not unplug and plug in the power cord with a wet hand, as an electrical shock could result.	
	Plug the power cord all the way into the power outlet. Failure to do this could result in a fire or electrical shock.	
	Make sure to ground this product. (Connect the power cord to an electrical outlet that is equipped with a grounding terminal.) Failure to do so and an unlikely event of leakage could result in a fire or electrical shock.	
CAUTION	The outlet must be near the equipment and easily accessible. Otherwise you can not pull out the power plug when an emergency occurs.	
	Do not place any objects around the power plug, as the power plug may be difficult to pull out when an emergency occurs.	
	Do not tug the power cord when unplugging. Pulling on the power cord could damage the cord, resulting in a fire or electrical shock.	
	Remove the power plug from the outlet more than one time a year and clean the area between the plug terminals. Dust that accumulates between the plug terminals may cause a fire.	

<Installation>

Graphic symbols	Descriptions	
WARNING	Keep this bag away from babies and children. Do not use in cribs, beds, carriages, or playpens. The thin film may cling to nose and mouth and prevent breathing. This bag is not a toy.	

Graphic symbols	Descriptions	
WARNING	Do not place a flower vase or other container that contains water, or metal clips or other small metallic objects on this product. Spilled water or metallic objects dropped inside the product could result in a fire, electrical shock, or breakdown. Should a piece of metal, water, or any other similar foreign matter get inside the product, immediately turn OFF the power switch, unplug the power cord from the power outlet, and then call your Technical Representative or your authorized service representative.	
	Make sure that the power cord is placed on a site in which no person would step on or trip over it. Stepping on or tripping over the power cord could heat the power cord, resulting in a fire or electric shock.	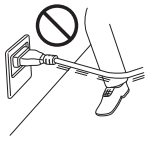
CAUTION	**<If instructed to use fixing legs>>** When the product has been installed, fix the product using the fixing legs. Not using the fixing legs could cause the product to move or topple over.	
	Do not place the product in a dusty place, or a site exposed to soot or steam, near a kitchen table, bath, or a humidifier. A fire, electrical shock, or breakdown could result.	
	Do not place this product on an unstable or tilted bench, or in a location subject to a lot of vibration and shock. It could drop or fall, causing personal injury or mechanical breakdown.	
	Do not let any object plug the ventilation holes of this product. Heat could accumulate inside the product, resulting in a fire or malfunction.	
	Whenever moving this product, be sure to disconnect the power cord and other cables. Failure to do this could damage the cord or cable, resulting in a fire, electrical shock, or breakdown.	
	When moving this product, always hold it at the locations specified in the User's Guide or other documents. If the unit is moved while held at locations other than those specified, it may fall, causing severe personal injury.	

<Using the product>

Graphic symbols	Descriptions	
WARNING	Do not modify this product, as a fire, electrical shock, or breakdown could result. If the product employs a laser, the laser beam source could cause blindness.	
	Do not attempt to remove the covers and panels which have been fixed to the product. Some products have a high-voltage part or a laser beam source inside that could cause an electrical shock or blindness.	
	Do not keep using this product, if this product becomes inordinately hot or emits smoke, or unusual odor or noise. Immediately turn OFF the power switch, unplug the power cord from the power outlet, and then call your Technical Representative or your authorized service representative. If you keep on using it as is, a fire or electrical shock could result.	
	Do not keep using this product, if this product has been dropped or its cover damaged. Immediately turn OFF the power switch, unplug the power cord from the power outlet, and then call your Technical Representative or your authorized service representative. If you keep on using it as is, a fire or electrical shock could result.	
	Do not use flammable sprays, liquids, or gases inside or near this machine. Do not clean the inside of this machine using a flammable gas duster. A fire or explosion could result.	
	<If an RFID module (limited only to 13.56 MHz) for use in inside-the-machine proximity communication or electromagnetic induction heating (IH) technology (limited only to 20.05 kHz to 100 kHz) is being used> This machine generates a weak magnetic field. If you experience any unusual symptoms with your implantable medical equipment (cardiac pacemaker, etc.) while near the machine, move away from the machine and see a doctor immediately. Please call your Technical Representative or your authorized service representative if you do not understand the purchased product corresponds or not.	

Graphic symbols	Descriptions	
WARNING	**<If a non-contact IC card reader is being used>** If you use an implantable medical equipment (cardiac pacemaker, etc.), do not bring the IC card reader close from the implant within 12 cm at all times. The radio waves may affect implantable medical equipment (cardiac pacemaker, etc.) operations.	
CAUTION	Using this product in a poorly ventilated room for a long time or producing a large volume of copies or prints may cause the odor of exhaust air from the machine. Ventilate the room well.	
	The inside of this product has areas subject to high temperature, which may cause burns. When checking the inside of the unit for malfunctions such as a paper misfeed, do not touch the locations (around the fusing unit, etc.) which are indicated by a “Caution HOT” caution label. A burn could result.	
	Unplug the product when you will not use the product for long periods of time.	
	When using the machine, do not look at the light of the lamp for a prolonged time. Eyestrain could result.	
	Do not use stapled paper, conductive paper (such as silver paper or carbon paper) or treated heat-sensitive/ inkjet paper, otherwise a fire may result.	

<Consumables>

Graphic symbols	Descriptions	
WARNING	Do not throw toner or a container that contains toner (e.g., toner cartridge and developing unit) into an open flame. The hot toner may scatter and cause burns or other damage.	
CAUTION	Do not leave toner-related parts (e.g., toner cartridge and developing unit) within easy reach of children. Licking any of these parts or ingesting toner could damage your health.	

Graphic symbols	Descriptions	
CAUTION	Do not store toner-related parts (e.g., toner cartridge and developing unit) near devices susceptible to magnetism, such as precision equipment and data storage devices, otherwise they may malfunction. They could cause these products to malfunction.	
	Do not force open the toner-related parts (e.g., toner cartridge and developing unit). If toner tumbles from the toner bottle, take utmost care to avoid inhaling it or even getting skin contact.	
	If toner lands on your skin or clothing, wash thoroughly with soap and water.	
	If you inhale toner, move to a place with fresh air and gargle with a lot of water repeatedly. Should you get symptoms such as coughing, seek medical advice.	
	If you get toner into your eyes, immediately rinse them with running water for over 15 minutes. Seek medical advice if irritation persists.	
	If you swallow toner, rinse out your mouth and drink a few glasses of water. Seek medical advice if necessary.	
	Never touch the electrical contacts of the units (e.g., toner cartridge and developing unit), as an electrostatic discharge may damage the product.	
	Before handling, see the user documentation for the safety information.	
	<If instructed to replace the fusing unit> The fusing section is extremely hot. Before replacing the fusing unit, be sure to open doors and covers of the machine. Then, leave the machine to stand idle for a specified period of time and make sure that the fusing section has cooled down to room temperature. Failure to follow these instructions could result in a burn.	min.

4. Regulation notices

Maximum radio-frequency power transmitted in the frequency band (EIRP):

MModule Name, Option	Frequency Band	Radiation. Power
UK-221 includes approved Wireless module, MODEL WN4521L:	2.4 GHz	Max. 20 dBm
	5 GHz	Max. 23 dBm
EK-609 includes approved Wireless module, MODEL MBH7BLZ02:	2.4 GHz	Max. 3 dBm

Note

- This radio equipment is restricted to indoor use only. Outdoor use is prohibited.
- This restriction applies to all the countries listed in the table below.

AT	BE	BG	CH	CY	CZ	DE	DK	EE
EL	ES	FI	FR	HR	HU	IE	IS	IT
LI	LT	LU	LV	MT	NL	NO	PL	PT
RO	SE	SI	SK	TK	UK			

For Brasilia users/ Para usuários de Brasília

The UK-221 (includes wireless module, model WN4521L) are not provide for the Brazilian market./ O UK-221 (inclui módulo sem fio, model WN4521L) não é fornecido para o mercado brasileiro.

Laser safety

This is a digital machine which operates using a laser. There is no possibility of danger from the laser provided the machine is operated according to the instructions in the manuals. Since radiation emitted by the laser is completely confined within protective housing, the laser beam cannot escape from the machine during any phase of user operation. This machine is certified as a Class 1 laser product per IEC 60825-1: 2014: This means the machine does not produce hazardous laser radiation.

Internal laser radiation

Maximum Average Radiation Power: 5.7 μW at the laser aperture of the print head unit.
Wavelength: 770-800 nm This product employs a Class 3B laser diode that emits an invisible laser beam. The laser diode and the scanning polygon mirror are incorporated in the print head unit.
The print head unit is NOT A FIELD SERVICE ITEM: Therefore, the print head unit should not be opened under any circumstances.

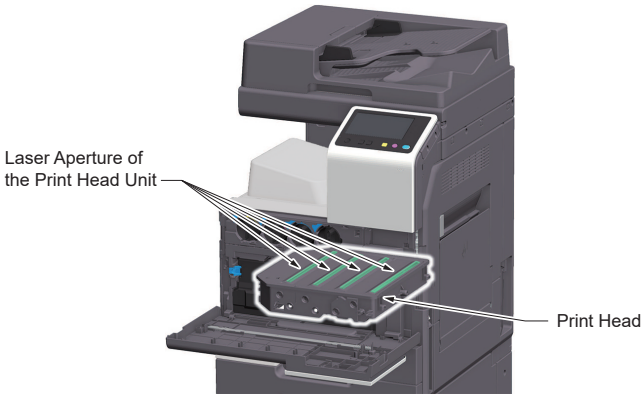

CDRH regulations

This machine is certified as a Class 1 Laser product under Radiation Performance Standard according to the Food, Drug and Cosmetic Act of 1990. Compliance is mandatory for Laser products marketed in the United States and is reported to the Center for Devices and Radiological Health (CDRH) of the U.S. Food and Drug Administration of the U.S. Department of Health and Human Services (DHHS). This means that the device does not produce hazardous laser radiation. The label shown on page 5 indicates compliance with the CDRH regulations and must be attached to laser products marketed in the United States.

⚠ Warning

Use of controls, adjustments or performance of procedures other than those specified in this manual may result in hazardous radiation exposure.

- **This is a semiconductor laser. The maximum power of the laser diode is 20 mW and the wavelength is 770-800 nm.**

For European users

⚠ Warning

Use of controls, adjustments or performance of procedures other than those specified in this manual may result in hazardous radiation exposure.

- **This is a semiconductor laser. The maximum power of the laser diode is 20 mW and the wavelength is 770-800 nm.**

Laser safety label

A laser safety label is attached to the outside of the machine, as shown below.

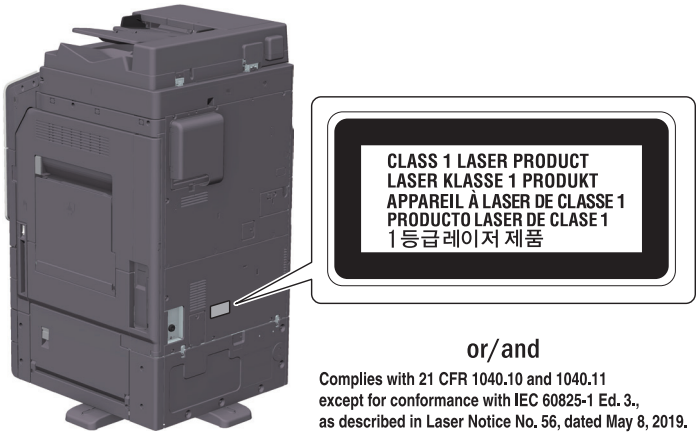

Ozone release

Locate the Machine in a Well-Ventilated Room A negligible amount of ozone is generated during normal operation of this machine. An unpleasant odor may, however, be created in poorly ventilated rooms during extensive machine operations. For a comfortable, healthy and safe operating environment, it is recommended that the room be well ventilated. Placer l'appareil dans une pièce largement ventilée Une quantité d'ozone négligable est dégagée pendant le fonctionnement de l'appareil quand celui-ci est utilisé normalement. Cependant, une odeur désagréable peut être ressentie dans les pièces dont l'aération est insuffisante et lorsque une utilisation prolongée de l'appareil est effectuée. Pour avoir la certitude de travailler dans un environnment réunissant des conditions de confort, santé et de sécurité, il est préférable de bien aérer la pièce ou se trouve l'appareil.

Acoustic noise (for German users only)

Der höchste Schalldruckpegel beträgt 70 dB(A) oder weniger gemäß EN ISO 7779.

Notification for California customers

This product uses a CR Lithium Battery which contains perchlorate material. This perchlorate warning applies to perchlorate-containing lithium batteries sold or distributed in California, USA. "Perchlorate Material - Special handling may apply, See **"www.dtsc.ca.gov/hazardouswaste/perchlorate."**

Recycling batteries (for Taiwan users only)

根據地方規定處理使用的電池。

This symbol means: Do not dispose of this product together with your household waste!

Please refer to the information of your local community or contact our dealers regarding the proper handling of end-of-life electric and electronic equipments. Recycling of this product will help to conserve natural resources and prevent potential negative consequences for the environment and human health caused by inappropriate waste handling.

For EU member states only

This product complies with RoHS (2011/65/EU) Directive.

Telephone cable (for users in countries subject to class B regulations)

Connect a telephone cable with a ferrite core to the telecommunication port of this machine. (Connect the modular jack on the ferrite-coreequipped end of the telephone cable to the telecommunication port.)

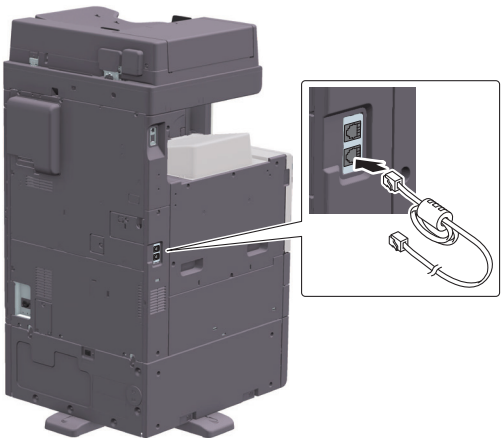

USB host

Connect USB devices (Memory, Authentication, Hub etc.) devices directly to the USB host. If an extension cable is used, electromagnetic interference could occur.

Graphic symbols used on this machine

These are some of major exemplary graphical symbols.

Graphic symbols	Descriptions	Graphic symbols	Descriptions
	“ON” position		“OFF” position
	STAND-BY		push-push type switches
	Ground/Earth (Protective bonding terminal)		Ground/Earth (Protective earthing)
	CLASS II EQUIPMENT		Class II equipment with functional earthing

Graphic symbols	Descriptions	Graphic symbols	Descriptions
	Functional earthing		General precaution
	High temperature		Electrical shock hazard
	CAUTION moving fan blade	N	CAUTION DOUBLE POLE / NEUTRAL FUSING

5. Special notice to user

For U.S.A.

FCC PART 68 REQUIREMENTS: This equipment complies with Part 68 of the FCC rules and the requirements adopted by the ACTA. On the cover of this equipment is a label that contains, among other information, a product identifier in the format US:AAAEQ##TXXXX. If required, this information must be provided to the telephone company.

This equipment uses certification jack USOC RJ11C.

A plug and jack used to connect this equipment to the premises wiring and telephone network must comply with the applicable FCC Part 68 rules and requirements adopted by the ACTA.

A compliant telephone cord and modular plug is provided with this product. It is designed to be con nected to a compatible modular jack that is also compliant. See installation instructions for details.

The REN is used to determine the number of devices that may be connected to a telephone line. Ex cessive RENs on a telephone line may result in the devices not ringing in response to an incoming call. In most but not all areas, the sum of RENs should not exceed five (5.0).

To be certain of the number of devices that may be connected to a line, as determined by the total RENs, contact the local telephone company. For products approved after July 23, 2001, the REN for this product is part of the product identifier that has the format US: AAAEQ##TXXXX. The digits represented by ## are the REN without a decimal point (e.g., 03 is a REN of 0.3). For earlier pro ducts, the REN is separately shown on the label.

The telephone company may make changes in its facilities, equipment, operations or procedures that could affect the operation of the equipment. If this happens the telephone company will provide ad vance notice in order for you to make necessary modifications to maintain uninterrupted service.

If trouble is experienced with this equipment FK-513, for repair or warranty information, please con tact the dealer location where you purchased this equipment. If the equipment is causing harm to the telephone network, the telephone company may request that you disconnect the equipment until the problem is resolved.

Connection to party line service is subject to state tariffs. Contact the state public utility commission, public service commission or corporation commission for information. If you home has specially wired alarm equipment connected to the telephone line, ensure the installation of FK-513 does not disable you alarm equipment. If you have questions about what will disable alarm equipment, consult your telephone company or a qualified installer.

The Telephone Consumer Protection Act of 1991 makes it unlawful for any person to use a compu- ter or other electronic device, including FAX machines, to send any message unless such message clearly contains in a margin at the top or bottom of each transmitted page or on the first page of the transmission, the date and time it is sent and an identification of the business or other entity, or other individual sending the message and the telephone number of the sending machine or such business, other entity, or individual. (The telephone number provided may not be a 900 number or any other number for which charges exceed local or long-distance transmission charges.)

In order to program this information into your FAX machine, you should complete the following steps: See Sending after Renaming the Sender (**[Sender Settings]**), of the User's Guide **[Fax]**.

WARNING/CAUTION Explained

⚠ Warning

- **The exclamation point within an equilateral triangle followed by the word "Warning" is intended to alert the user to the possibility that a disregard for the warning may result in fatal hazards or critical injuries. Be sure to focus your attention on the Warning headings when reading this Quick Guide.**

⚠ Caution

- **The exclamation point within an equilateral triangle followed by the word "Caution" is intended to alert the user to the possibility that a disregard for the caution may result in minor injuries or in physical damage. Be sure to focus your attention on the Caution hea dings when reading this Quick Guide.**

EMI(Electromagnetic Interference) Notice

① FCC COMPLIANCE STATEMENT

This device complies with part 15 of the FCC Rules. Operation is subject to the following two conditions: (1) this device may not cause harmful interference, and (2) this device must accept any interference received, including interference that may cause undesired operation.

② INFORMATION TO USER

This equipment has been tested and found to comply with the limits for a Class A digital device, pursuant to part 15 of the FCC Rules. These limits are designed to provide reasonable protection against harmful interference when the equipment is operated in a commercial environment.
This equipment generates, uses, and can radiate radio frequency energy and, if not installed and used in accordance with the instruction manual, may cause harmful interference to radio communications. Operation of this equipment in a residential area is likely to cause harmful interference in which case the user will be required to correct the interference at his own expense.

③ CAUTION

Any changes or modifications not expressly approved by the manufacturer responsible for compliance could void the user's authority to operate the equipment.

④ IC Identification on Class of ITE

CAN ICES-3 (A) / NMB-3 (A)

WLAN Notice

Exposure to radio frequency radiation
The following notice is applicable if your product has a wireless module(WiFi module) installed.
The radiated output power of this product is far below the FCC radio frequency exposure limits.
A minimum clearance of 20 cm (8 inches) must be maintained between the antenna and any persons

for this product to satisfy the RF exposure requirements of the FCC.

For Europe

The Facsimile has been confirmed to meet the standards (or requirements) ETSI for pan-European single terminal connection to the public switched telephone network (PSTN).

For New Zealand

This device is equipped with pulse dialing while the Telecom standard is DTMF tone dialing. There is no guarantee that Telecom lines will always continue to support pulse dialing.

Use of pulse dialing, when this equipment is connected to the same line as other equipment, may give rise to bell tinkle or noise and may also cause a false answer condition. Should such problems occur, the user should not contact the Telecom Fault Service.

This equipment may not provide for the effective hand-over of a call to another device connected to the same line.
The grant of a Telepermit for any item of terminal equipment indicates only that Telecom has accepted that the item complies with minimum conditions for connection to its network. It indicates no endorsement of the product by Telecom, nor does it provide any sort of warranty.
Above all, it provides no assurance that any item will work correctly in all respects with another item of Telepermitted equipment of a different make or model, nor does it imply that any product is compatible with all of Telecom's network services.

The automatic calling functions of this equipment must not be used to cause a nuisance to other customers.

Telepermitted equipment only may be connected to the auxiliary telephone port. The auxiliary port is not specifically designed for 3-wire connected equipment. 3-wire might not respond to incoming ringing when connected to this port.

6. Space requirements

To ensure that machine operation, consumables replenishing, part replacement, and regular mainte nance can easily be performed, adhere to the recommended space requirements detailed below.

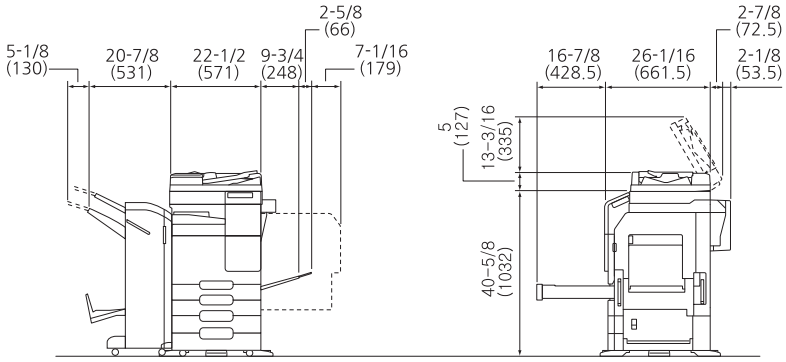

Main unit + DF-633 + PC-218 + FS-539 SD + RU-514 + MK-748 + CU-101 Unit: inch (mm)

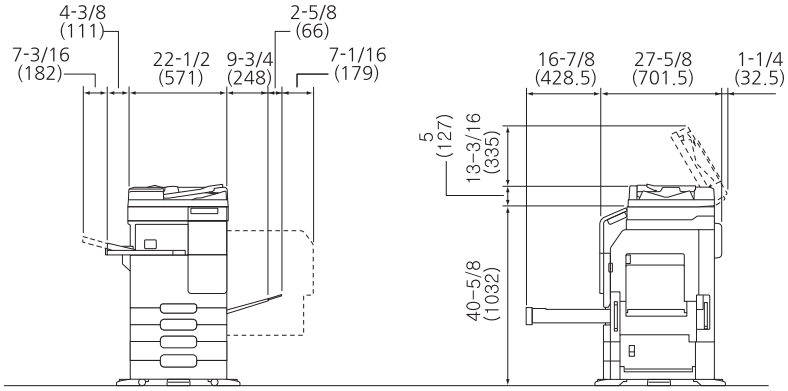

Main unit + DF-633 + PC-218 + FS-533 + PK-519 Unit: inch (mm)

Notice

Be sure to allow a clearance of 8 inches (200 mm) or more at the back of this machine for the ventilation duct.

7. Operation precautions

To ensure the optimum performance of this machine, observe the precautions described below.

Power source

The power source requirements are as follows.

- Voltage fluctuation: Maximum ^ 10% (at 110 V/120 V/220 to 240V AC)
- Frequency fluctuation: Maximum ^ 3 Hz (at 50 Hz/60 Hz)
- Use a power source with as little voltage or frequency fluctuations as possible.

Operating environment

The environmental requirements for correct operation of the machine are as follows.

- Temperature: 50°F (10°C) to 86°F (30°C) with fluctuations of no more than 18°F (10°C) within an hour
- Humidity: 15% to 85% with fluctuations of no more than 10% within an hour

Storage of copies

To store copies, follow the recommendation listed below.

- Copies that are to be kept for a long time should be kept where they are not exposed to light in order to prevent them from fading.
- Adhesive that contains solvent (e.g., spray glue) may dissolve the toner on copies.
- Color copies have a thicker layer of toner than normal black-andwhite copies. Therefore, when a color copy is folded, the toner at the fold may peel off.

Data stored in this machine

It is suggested to delete all data stored in all storage areas using the overwrite all data function to prevent leakage of data prior to transfer or disposal of the machine, or returning of the leased machi ne. For details of the overwrite all data function, refer to the User's Guide.
Contact your service representative before deleting data. It is recommended to backup storage perio dically as the measures for storage defect. For the detail information of storage backup, contact your service representative.

8. Legal restrictions on reproduction

Certain types of originals must never be reproduced with the purpose or intent to pass reproductions of such originals off as the originals.

The following is not a complete list, but is meant to be used as a guide to responsible reproduction.

<Financial Instruments>

- Personal checks
- Traveler's checks
- Money orders
- Certificates of deposit
- Bonds or other certificates of indebtedness
- Stock certificates

<Legal Originals>

- Food stamps
- Postage stamps (canceled or uncanceled)
- Checks or drafts drawn by government agencies
- Internal revenue stamps (canceled or uncanceled)
- Passports
- Immigration papers
- Motor vehicle licenses and titles
- House and property titles and deeds

<General>

- Identification cards, badges, or insignias
- Copyrighted works without permission of the copyright owner

In addition, it is prohibited under any circumstances to reproduce domestic or foreign currencies, or works of art without permission of the copyright owner.

When in doubt about the nature of an original, consult with legal counsel.

Notice

- This machine provides the forgery prevention function in order to prevent financial instruments from being reproduced illegally.
- We appreciate your understanding that printed images may infrequently have some noise or ima ge data may not be stored under certain circumstances due to this forgery prevention function.

9. Caution notations and labels

Safety precaution notations and labels appear on this machine at the following positions. Be very careful that an accident does not occur when operations such as removing paper jams and staple jams are performed.

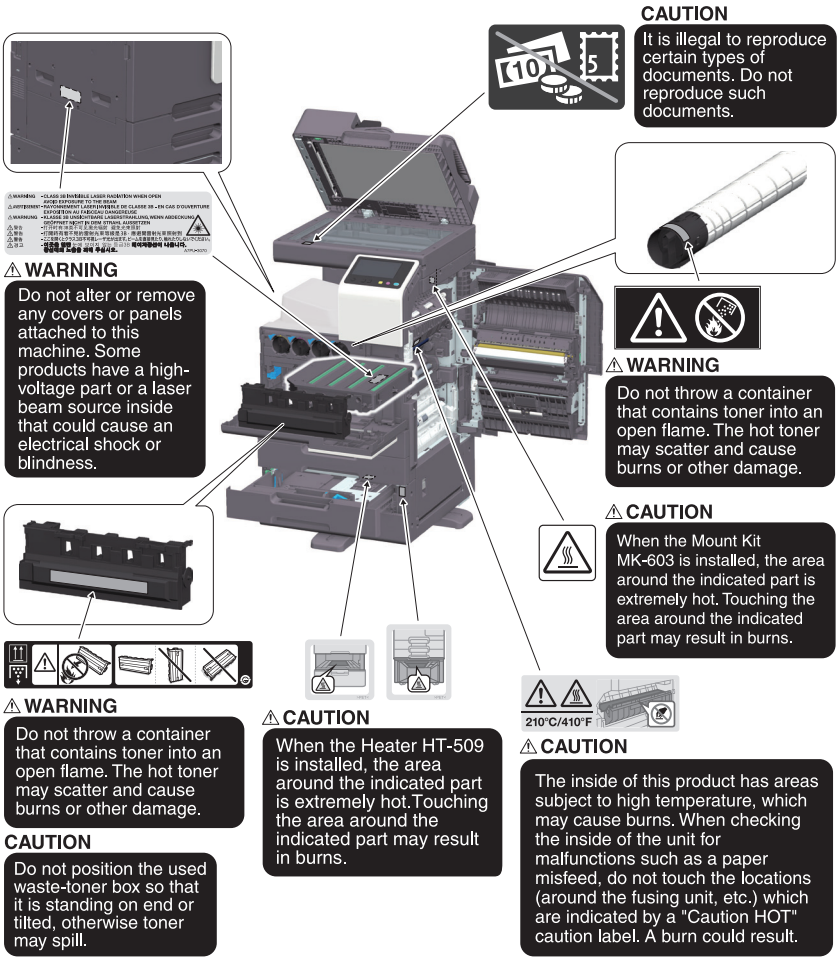

<FS-539/FS-539 SD>

Notice

- Do not remove caution labels or notations. If any caution label or caution notation is soiled, please clean to make legible. If you cannot make them legible, or if the caution label or notation is damaged, please contact your service representative.

D330A Series
Quick Start Guide

Before Using This Machine

2

1. Environmental initiatives

The company continuously strives to reduce the negative environmental impacts of all stages of its business operations.

As part of such activities, the company is implementing resource-saving steps by reducing the number of pages in the User's Guide.

For the information necessary to operate the machine, please refer to the bundled User's Guide CD (HTML format). This guide has an excellent search function.

Functions such as keyword search and filtering by purpose are very useful to help users find what they need to know.

2. Intended use of office MFP devices

Intended use

This Multi Function Product incorporates the functionality of multiple office devices in one. It is designed to be used as an office system for the following purposes:

- Print, copy, scan and fax documents.
- Use available finishing functions such as duplexing, stapling, hole-punching and booklet creation if appropriate options are installed.
- Store scanned documents on external USB memory devices; send scanned documents to network scan destinations such as FTP, WebDAV and Email.

The intended use also requires that:

- The system is used within the limits of device specifications and specifications of optional compo nents,
- All safety instructions in the related user's guides are observed,
- Legal restrictions on reproduction (page 7) are observed,
- Inspection and maintenance instructions are adhered to,
- General, national and company safety provisions are observed.

Impermissible operating conditions

The system may not be operated if:

- Errors or damage have been discovered,
- Maintenance intervals have been exceeded,
- Mechanical or electrical functions do not work as they should.

Exclusion of liability

The manufacturer of the system assumes no liability for damages if the system was operated under impermissible conditions.

3. Target groups

The user's guides are intended for the following users of the system:

Target group	Descriptions
User	Persons using the system for objectives described in **"Intended use of office MFP devices"** as well as managing system functions and consumables according to the assigned user rights.
Administrator	Persons managing consumables, system functions, users and access rights; adjusting system settings, and establishing network connections.

Everyone who uses this system must have read and understood the related user's guides.

4. Introduction to user's guide

The user's guide of this product consists of this manual and the HTML User's Guide.

This manual describes notes and precautions that should be followed in order to use this machine safely, and also provides information about basic functions and operation methods.

If you want to learn about more detailed functions or operation methods, refer to the HTML User's Guide included in the User's Guide CD.

Quick Guide

This document describes notes and precautions that should be followed in order to use this machine safely, and also provides information about basic functions and operation methods.

Be sure to read this guide before use.

HTML User's Guide

This User's Guide is included in the User's Guide CD. The User's Guide provides basic and detailed information on the functions of this product and also explanations of other various setting functions.

5. Symbols and notations used in this manual

Symbol/notation	Descriptions
⚠ Warning	Improper handling can cause serious injury or death.
⚠ Caution	Improper handling can cause minor injury or damage to houses and property.
Notice	This symbol indicates a risk that may result in damage to this machine or documents. Follow the instructions to avoid property damage.
✔	This check mark symbol shows a precondition of a procedure.
➔	This symbol indicates a supplementary explanation of a procedural instruction.
Tips	This symbol indicates supplemental information of a topic as well as options required to use a function.
Reference	This symbol indicates reference functions related to a topic.
❖ **Related setting**	This shows the settings related to a particular topic for any user.
❖ **Related setting (for the administrator)**	This shows the settings related to a topic only for administrators.
[ ]	An item enclosed by brackets [ ] indicates a key name on the **Touch Panel** or computer screen, or the name of a user's guide.

6. Administrator password

The administrator password is set to **[1234567812345678]** by factory default. Try this password if the administrator password has not been changed. Change the administrator password periodically.

D330A Series
Quick Start Guide

How to Use the HTML User's Guide About

3

About the HTML User's Guide

The HTML User's Guide included in the User's Guide CD can also be obtained from the following URL. To obtain the HTML User's Guide, send the URL read from the QR code to your computer. Select a desired function on the top page (Home), and check the details of the function.

Selecting **[Introduction]** on the top page (Home) allows you to view detailed methods for using the HTML User's Guide.

Operating environment

Supported operating systems

- Microsoft Windows 7 (SP1)/Windows 8.1/Windows 10
  Apple Mac OS 10.11/10.12/10.13/10.14/10.15

Supported Web browsers

- **Windows:**
  Microsoft Internet Explorer 10/11 (Desktop version), Microsoft Edge, Firefox latest version, Google Chrome latest version
- **Mac OS:**
  Safari latest version

Display resolution

- 1024 x 768 pixels or more

Tips

- We recommend that you use the latest Web browser that is compatible with your operating sys tem to help you use this machine more conveniently and comfortably.
- Check that JavaScript in your Web browser is enabled. The HTML User's Guide uses JavaScript for the page display and search functions.