smartStation™

Installation and User manual

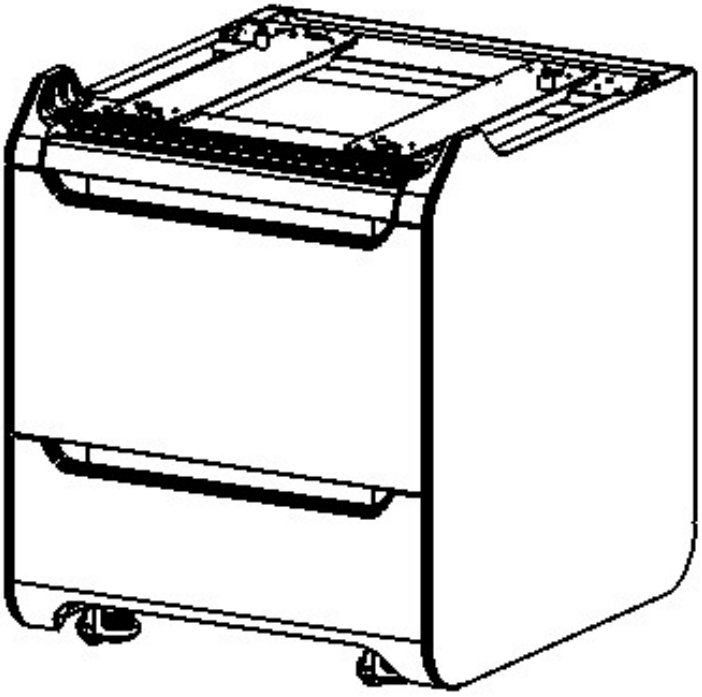

Safety Precautions

Please follow the instructions below when using the product.

Warning: Failure to follow the instructions may cause death or serious injuries.

- Do NOT place the product in a humid place because it may cause deformation or malfunction of the product.
- Be careful NOT to let metal items such as necklaces, coins, keys, and watches come into contact with the electrical terminals.
- Do NOT lift or move the product by holding its internal parts.
- Do not lean on the 1st table, climb on the table, or exceed the specified load.
  The work table may fail to operate or the product may fall forward.
- Do not lean on the 2nd drawer, climb on the drawer, or press the drawer using your hands with force.
  The drawer may fail to operate or the product may fall forward.
- Do not lean on the 3rd drawer, climb on the drawer, or put anything exceeding the specified load.
  The drawer may fail to operate or the product may fall forward.
- When opening or closing the drawer, be careful not pinch your hands or any part of your body.
- When moving the product, be careful not to get your feet or body parts caught by its wheels.
- When moving the product by pushing, check if there are irregularities on the floor.
  The wheels may get caught in the irregularities, and the product may fall down.
- When moving the product by pushing, check if the smartStaion™ 's table and drawer and fabWeaver type A530 door are closed. If they are opened when the product is moved, the product may fall down.
- Place the product on the flat floor. If the product is installed on a slope, it may fall down.

⚠ DO NOT GO ON AND PRESS DOWN THE TABLE
DO NOT PLACE A HEAVY LOAD ON THE TABLE : MAX 5kg

⚠ DO NOT GO ON AND PRESS DOWN THIS DRAWER

⚠ LOAD LIMIT OF THIS DRAWER : MAX 15kg

Caution: Failure to follow the instructions may cause minor to serious injuries or property damage.

- Protect the product in humid or wet places exposed to rain, snow, etc.
- Do NOT let paper clips, staples or other small metal objects fall into the product.
- Take caution when cleaning inside the product.
- Do NOT dispose of the product or consumables as household wastes. Dispose of them at a designated store or proper recycling station.
- The inside of the product may be extremely hot. Do NOT touch parts labeled "Caution: HOT" or anywhere near the parts. Otherwise, you may suffer burns.
- The product meets the high quality and performance standards. It is strongly recommended to use ONLY genuine parts available in our designated stores.
- It is not allowed to use the product in places easily accessible by children.

Before Use

Please read this manual carefully before using the product and keep it close at hand.
You MUST read the safety precautions before using and installing this product for safe and correct use.

smartStation™ is used while fabWeaver type A530 is installed.
For the information on how to use fabWeaver type A530, see the user manual provided with fabWeaver type A530.

This user manual is created for user convenience, and the images and descriptions in this manual may differ from the actual product you receive.
Descriptions in this user manual may subject to change without prior notice. We are not liable for any direct or indirect damages caused by improper handling and operation of this product or consequential damages caused by the user's negligence, or for any damages or losses caused by unauthorized modifications

● Specifications

Product Name	smartStation™
Dimension (W x D x H)	747 mm x 810 mm x 888 mm
	747 mm x 1416 mm x 888 mm (with the Layer 2 drawer fully opened)
Weight	About 92 kg (machine release status, including two filament boxes except spool)
1st Table	Table for simple operations
	Max. length 380–390 mm
	Load below 5 kg
2nd Drawer	Extension of filament box (2 boxes by default, up to 4 boxes)
	Max. length 580-590 mm
3rd Drawer	Simple storage
	Max. length 480-490 mm
	Max. load capacity below 15 kg
Caster (Wheel)	Four units
	Rotating type, with fixed adjustment pad (integrated type)
Filament Box	2 boxes by default, 2 additional boxes can be installed to fabWeaver

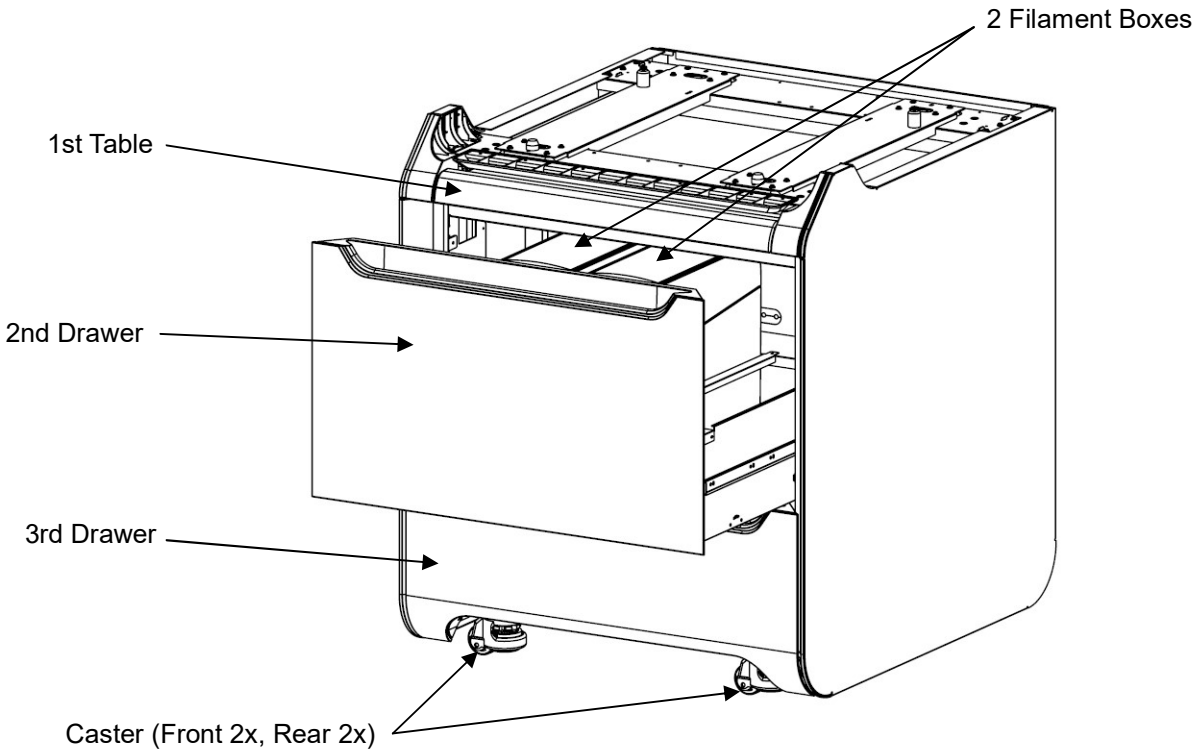

Basic Components

Check the basic components in the package

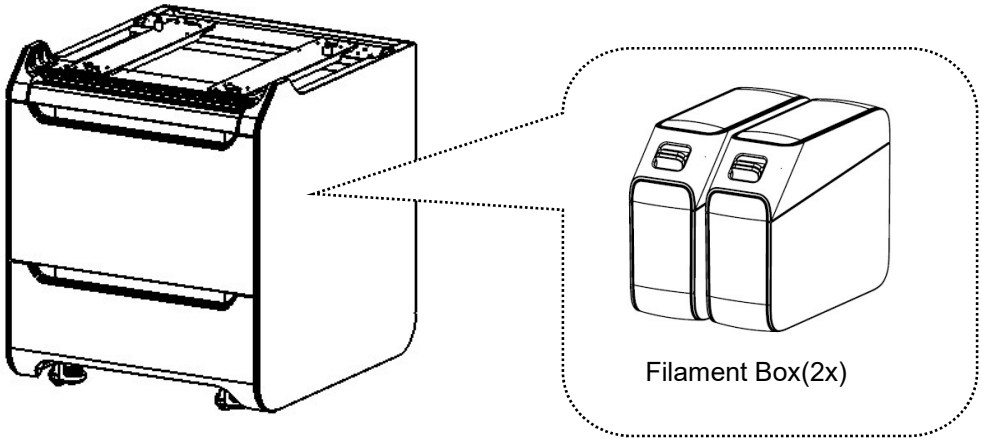

smartStation™

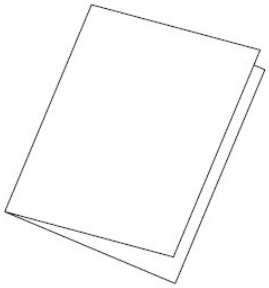

Installation Guide

Clamp(3x)

Bolt(2x)
N3331076

1. How to Read the User Manual

Symbol

This user manual uses the following symbols:

Warning>

- Indicates important safety precautions which,
  if not followed, may result in death or serious injuries.
  Please carefully read the instructions.
  Refer to the safety precautions for safe use of this product.

Caution>

- Indicates important safety precautions which,
  if not followed, may result in minor injuries or property damage.
  Please carefully read the instructions.
  Refer to the safety precautions for safe use of this product.

Important>

- Indicates cautions for using this product regarding filament supply errors or data loss, etc.
  Please carefully read the instructions.
  Symbols indicate the information required before operating this product.

2. Product Installation

Caution> Risk of Injuries

- Install the product in a well-ventilated place.

  You may smell an odor when this product is being used. It is not harmful, but, if you need to print for a long time in a poorly ventilated space, adequate ventilation is needed.

- Place the product on the flat floor. If the product is installed on a slope, it may fall down.

Important>

- Install the product so that the vents is kept at least 10 cm away from the wall or surrounding devices. Secure proper space around the product for easy ventilation and operation.

  Use the product in an environment at a temperature of 16–29℃, and humidity of 20–70% RH. Do NOT install or use the product outdoors.

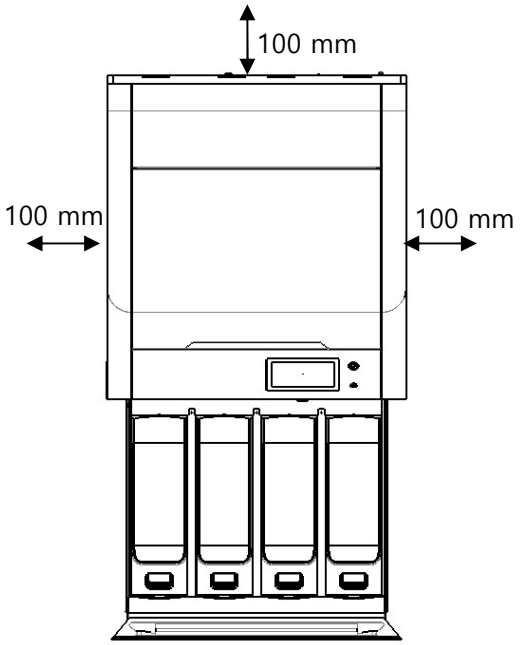

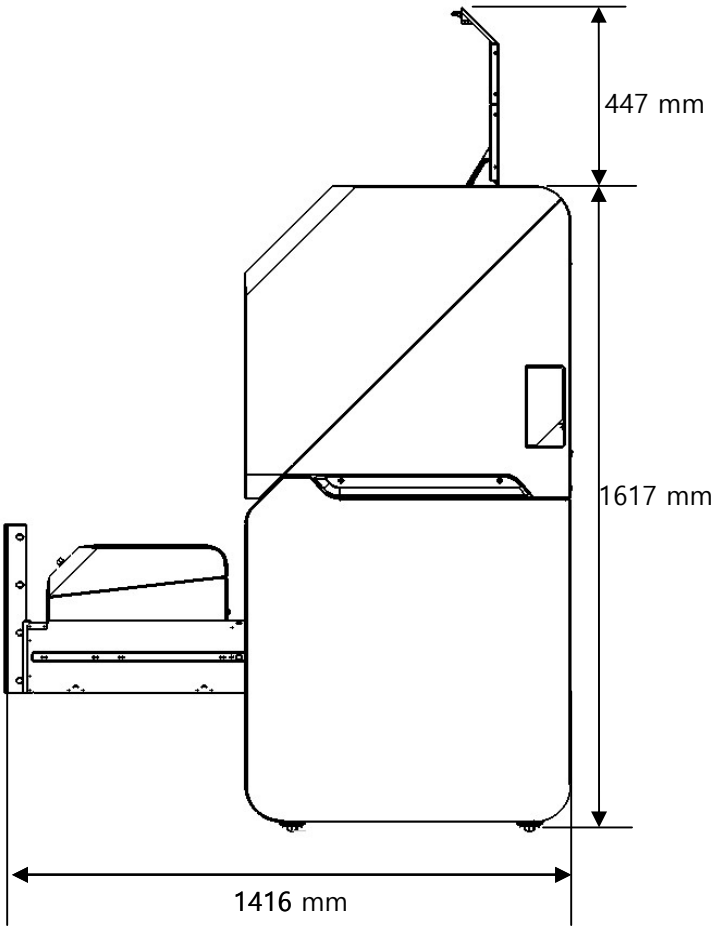

When installing and using fabWeaver type A530, rotate the fixing wheel on each caster (wheel) at the bottom of smartStaion to fix the machine so that the four casters (wheels) do not move.

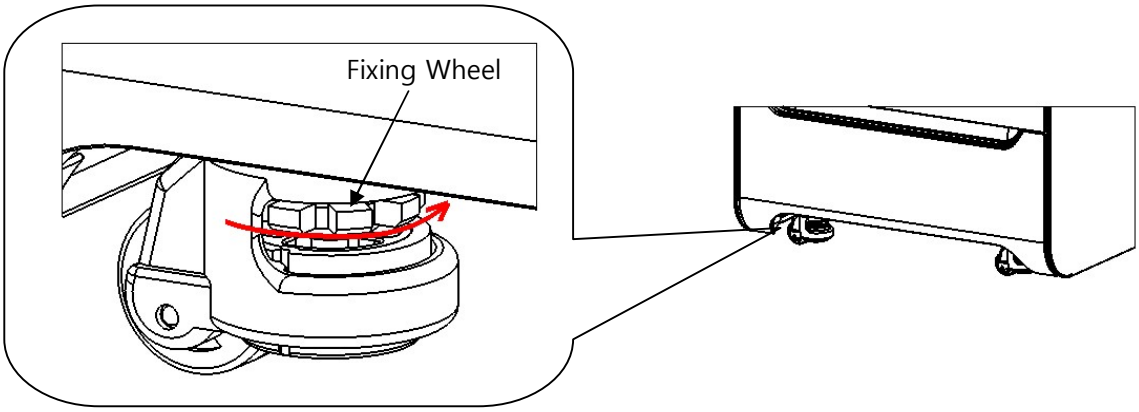

Caution>

- When installing fabWeaver type A530, using the fixing wheel on each caster (wheel) of smartStation to ensure that smartStation does not move.
- Turn the power of fabWeaver type A530 off, and disconnect the power plug from fabWeaver type A530.
- If a filament box is connected to fabWeaver type A530, disconnect all cables from fabWeaver type A530.
- Install fabWeaver type A530 by lifting it with four or more persons.
  (The weight of fabWeaver type A530 is about 100 kg in weight.)
- Align fabWeaver type A530 with four reference pins on smartStation.

Warning>

- Be careful not to get your hands or any part of your body caught between fabWeaver type A530 and smartStation. Otherwise, you may be seriously injured.

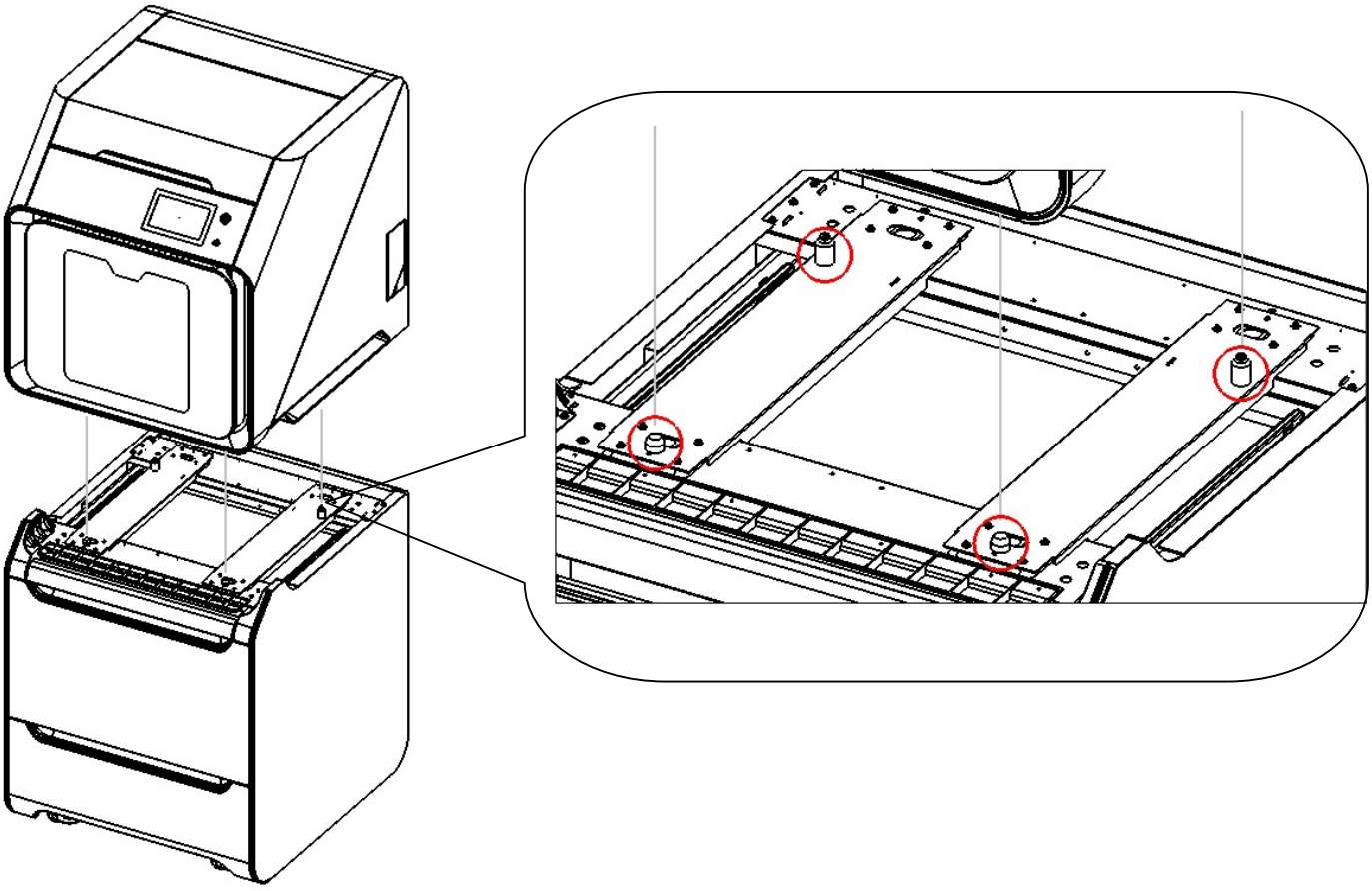

After installing fabWeaver type A530, remove the left, right, and back covers of fabWeaver type A530.

Warning>

- Before opening the left, right, and back covers, turn the power of fabWeaver type A530 off and disconnect the power plug from fabWeaver type A530.
- As the left, right, and back covers are heavy, so be careful not to let them fall off. Otherwise you may be injured. (Each cover is about 4–5 kg in weigh)

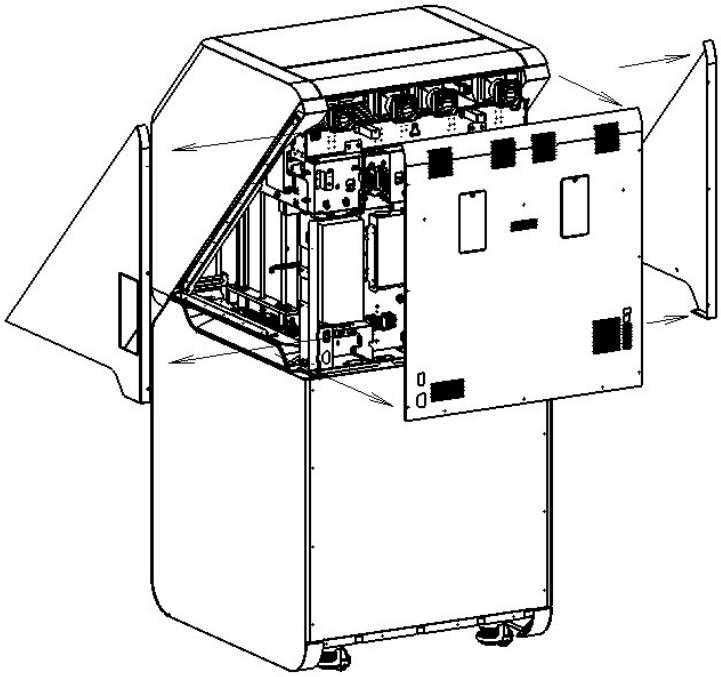

After installing fabWeaver type A530, fasten the bolts (N3331076) provided with smartStation to the reference pins, left and right holes on the back of fabWeaver type A530.

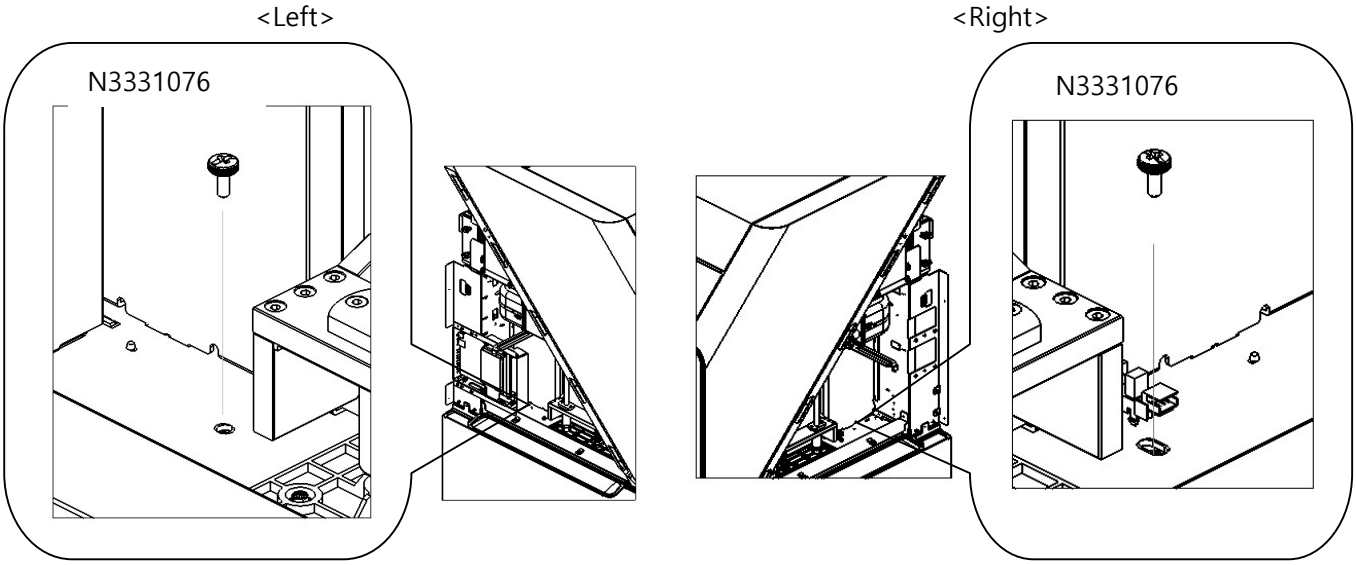

Warning>

- Before closing the left, right, and back covers, do NOT turn on the power of fabWeaver type A530. Otherwise, you may get an electric shock.

If fabWeaver type A530 is installed on smartStation, separate the cover on the back of smartStaion. Next, loosen the bolts to separate the three flat covers on the bottom of fabWeaver type A530. Remove the four filament tubes and three connection cables inside smartStation, and assemble them by using the three clamps supplied with smartStaion as shown below:

Warning>

- As the back cover is heavy, so be careful not to let it fall off. Otherwise you may be injured.
  (The cover is about 6 kg in weight.)

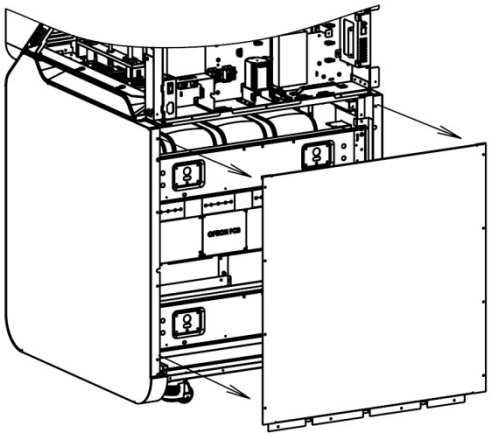

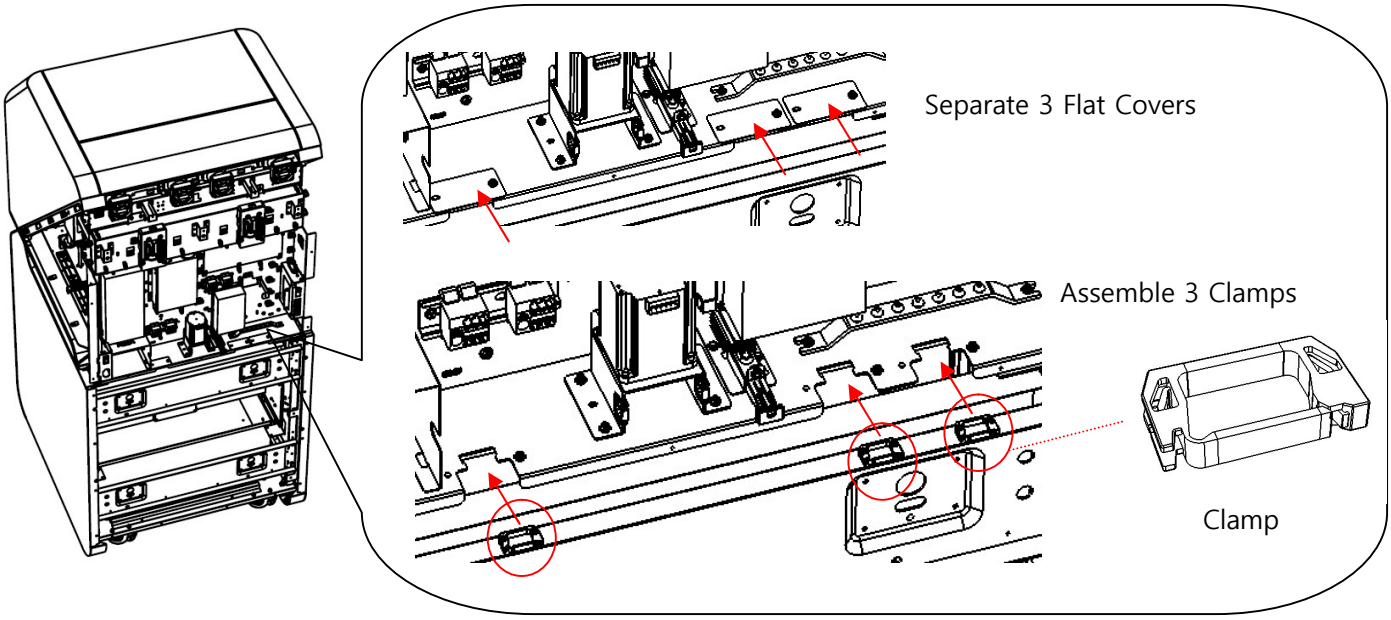

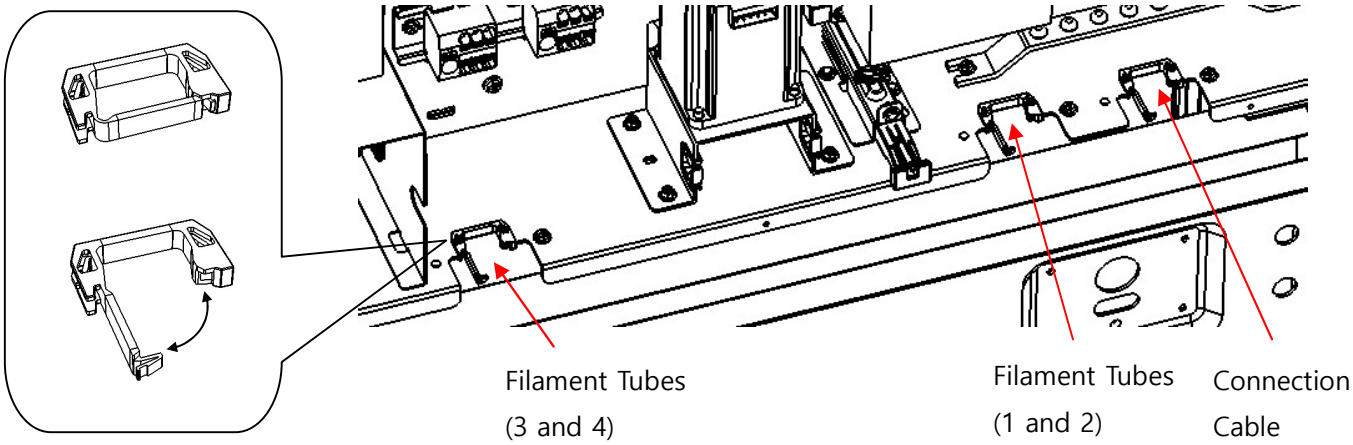

Open the clamp and insert the filament tube and connection cable into the clamp. And, close it.

If fabWeaver type A530 is installed on smartStation, connect four filament tubes and three connection cables of smartStaion to the junction units and boards of fabWeaver type A530. For the tubes, connect each tube to the corresponding junction unit considering its number.

Warning>

- Before closing the left, right, and back covers, do NOT turn on the power of fabWeaver type A530. Otherwise, you may get an electric shock

Important>

- If the tubes are connected without considering their numbers, the product may malfunction.

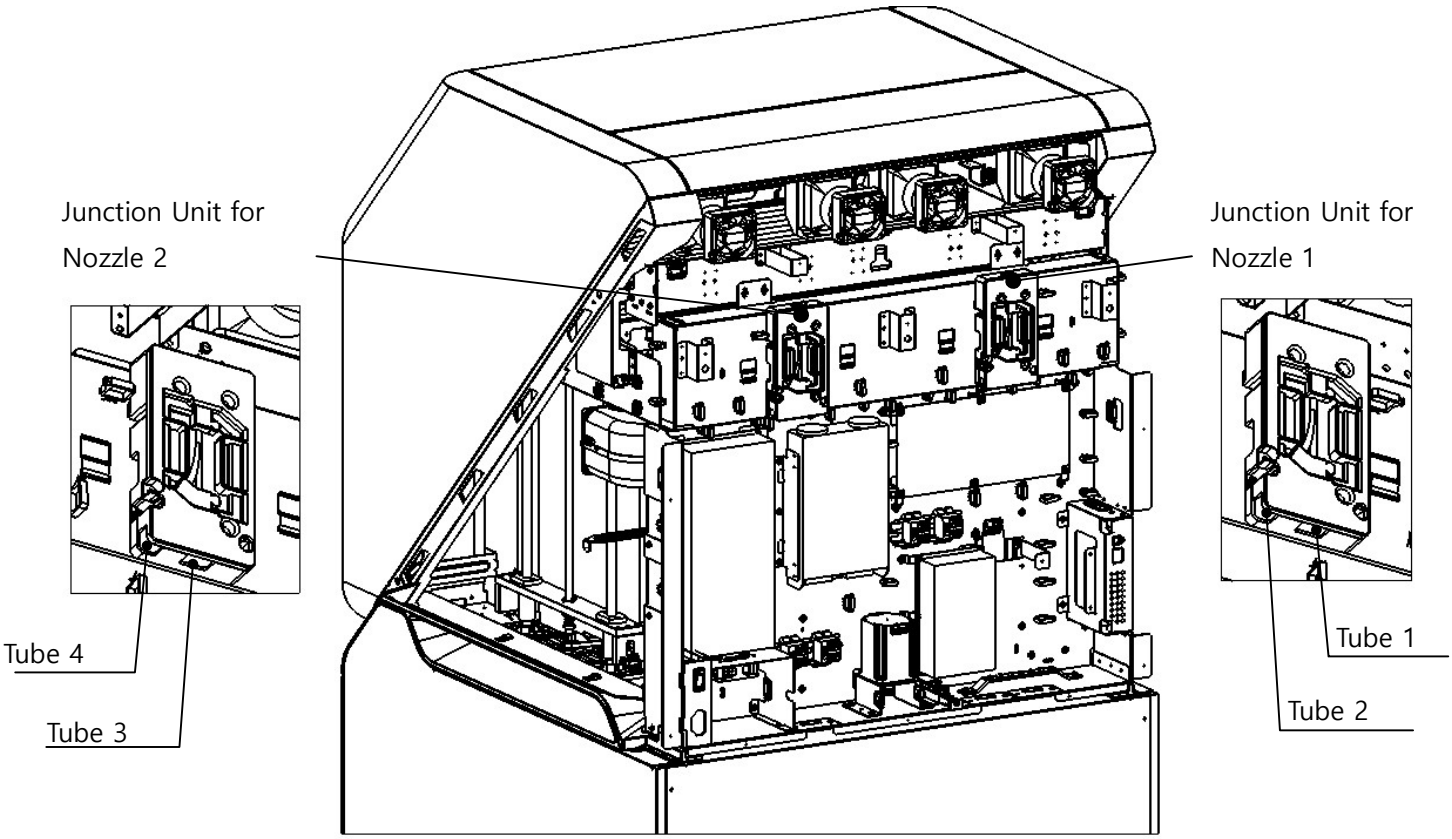

To connect filament tubes to junction units, loosen the bolts to separate the two junction unit covers as shown below:

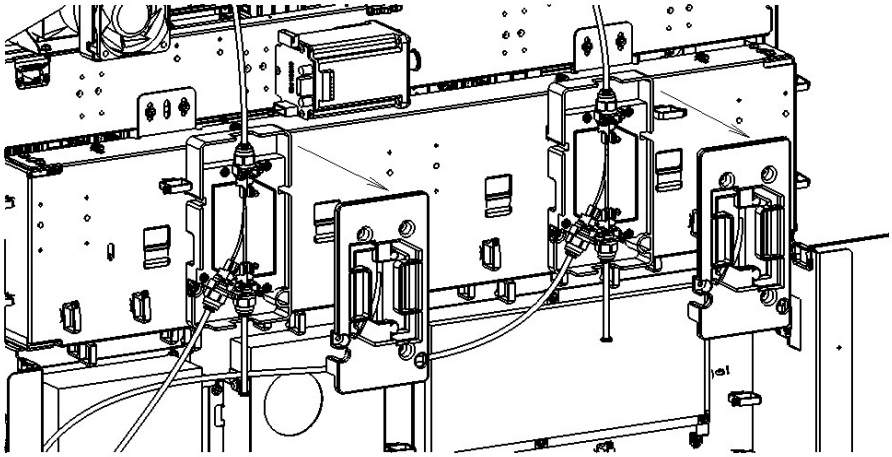

And, separate the tubes from the two junction units as shown below:

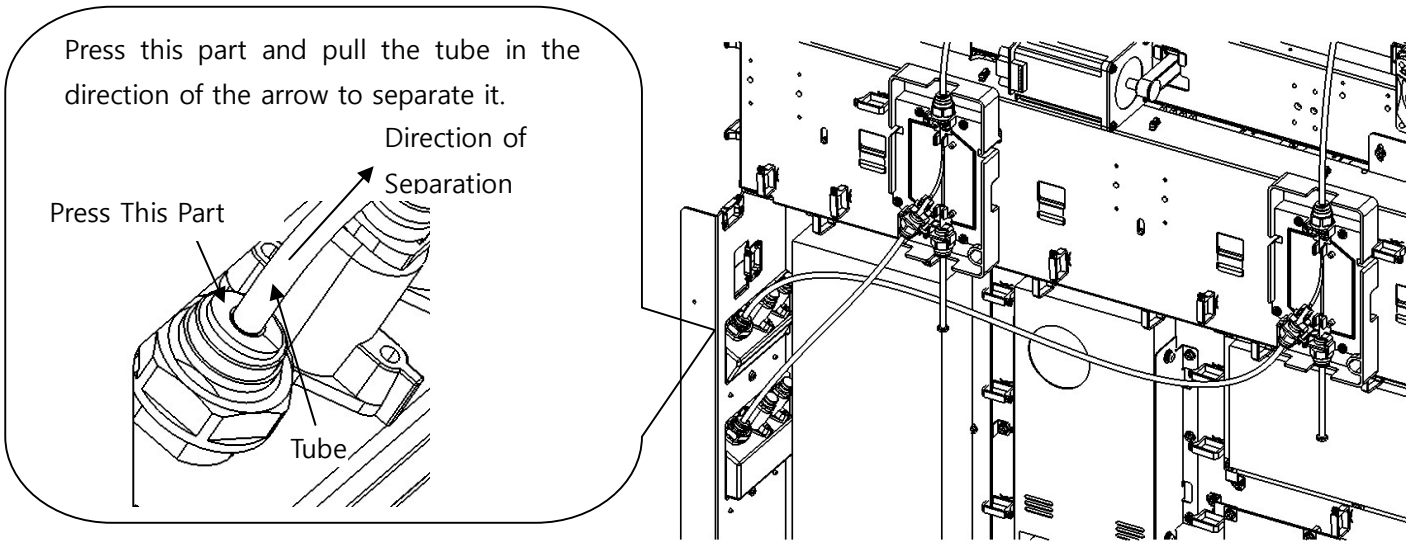

Next, hold the fitting part of a junction unit with hands, and separate all four fitting parts from the junction units as shown below. In addition, completely pull out the filament tubes connected to the four fitting parts.

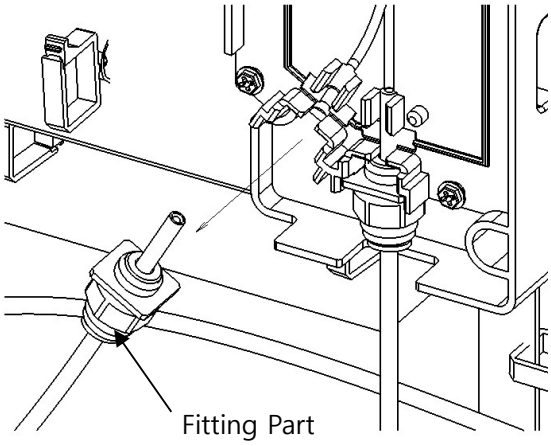

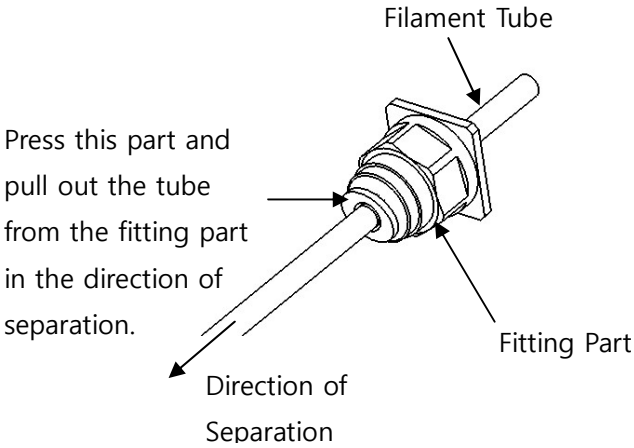

Connect the four filament tubes from smartStation to the four fitting parts separated from the above as shown below, and install the four filament tubes in the junction units as shown below. At the time, install them in accordance with the tube and junction numbers on the previous page. Check if it is the same as the following image after the installation, and reassemble the junction unit covers separated as described on the previous page.

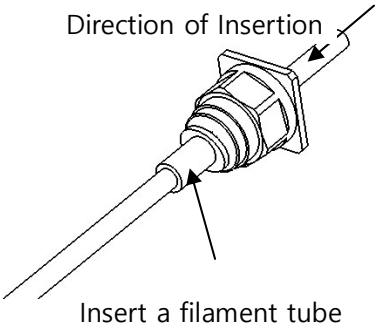

Insert a filament tube so that this part touches the fitting part.

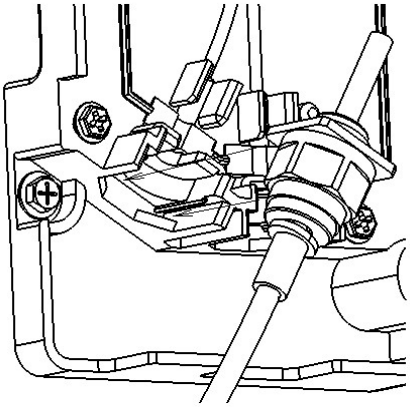

Insert the iron part of a fitting part into the section indicated by the arrow.

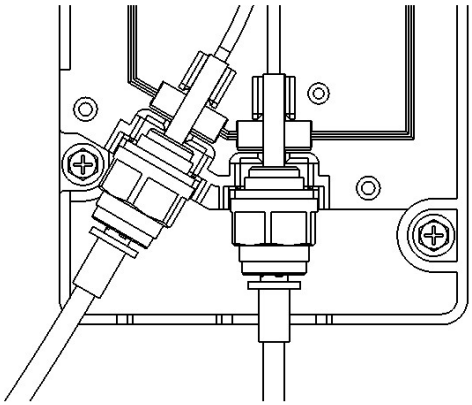

Image after installation

Among the three connection cables, connect the 2-pin cable labeled "Option PWR" to the "Option PWR" terminal on the upper left of Board 1, and connect the 24-pin cable labeled "Option I/F1" to the "Option I/F" terminal on the left center of the Board 1. Connect the 20-pin cable labeled "Option I/F2" to the "Option I/F" terminal on the lower right of the Board 2 after separating the SSD of the Board 2.

Caution>

- If cables are not connected in accordance with the above description, the product may malfunction.

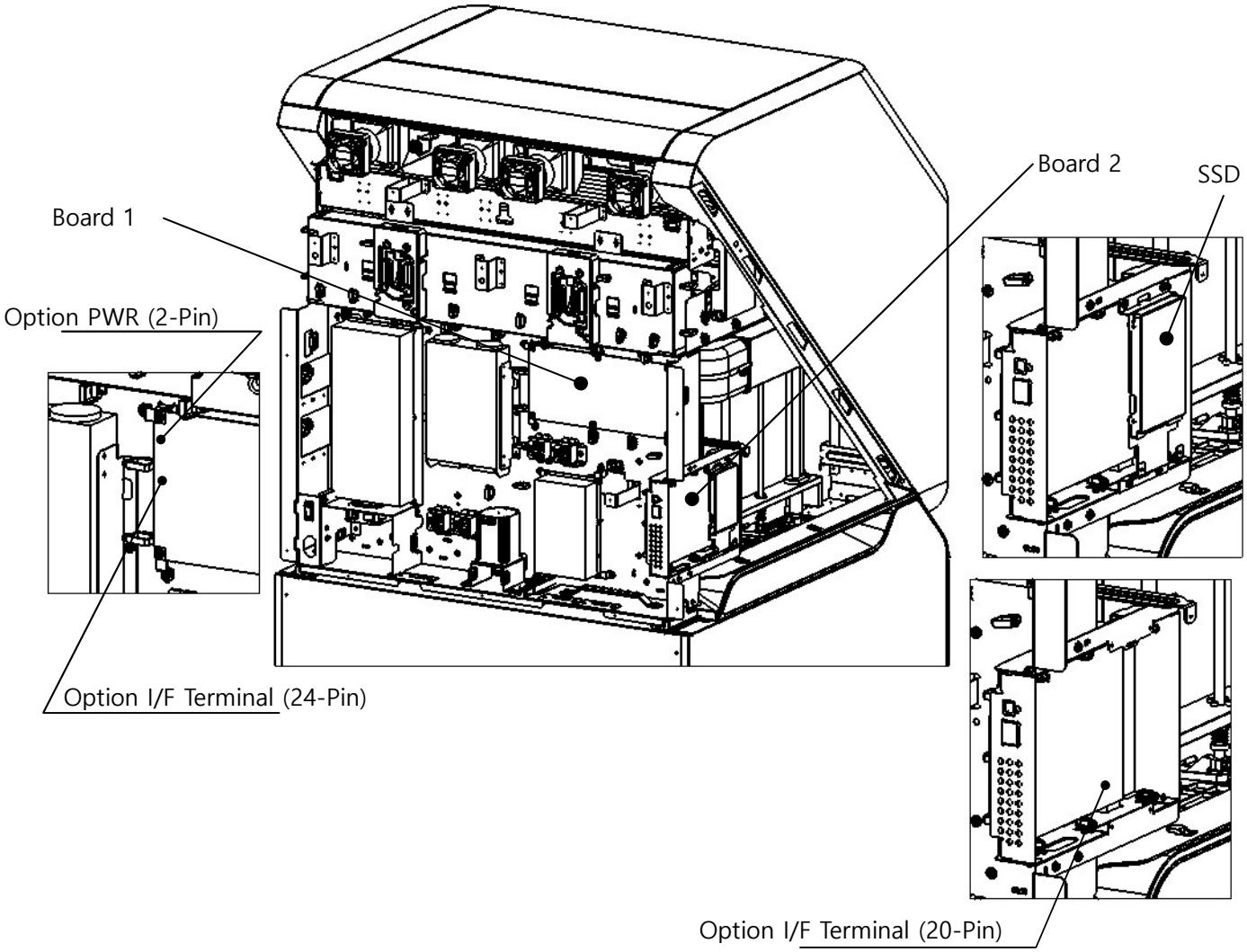

After connecting the tubes and cables, install the left, right, and back covers separated from fabWeaver type A530, and the back cover separated from smartStaion. After installing all the covers, turn the power on and check if the product operates normally.

Warning>

Before installing all the covers, do NOT turn on the power of the product. Otherwise, You may get an electric shock and may be seriously injured.

Open the second drawer of smartStation and put the two filament boxes provided with fabWeaver type A530 into the drawer for installation. Insert the Filament Box 1 of fabWeaver type A530 into the left side and the Filament Box 2 into the right side of the drawer.

Caution>

- The filament boxes are heavy. Thus, hold a filament box with both hands to prevent it from falling off.
  (The filament box is about 6 kg in weight.)

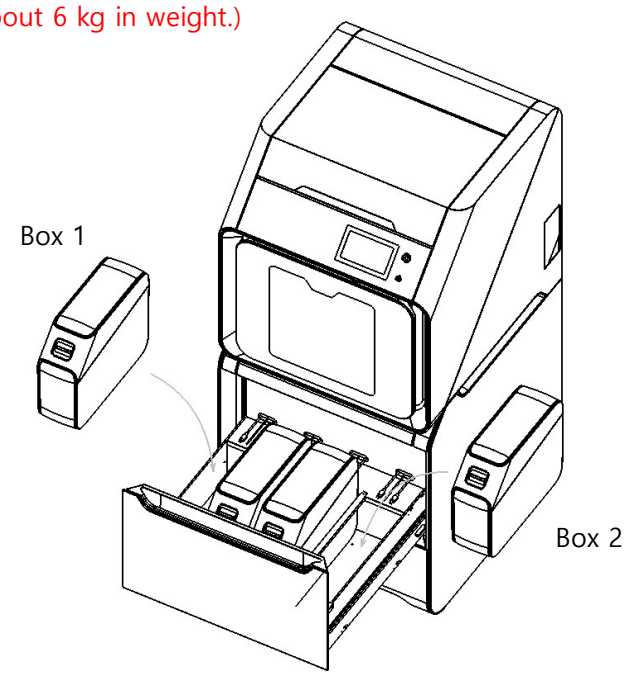

Connect the two cables (black and blue terminals) from the second drawer of smartStation and the filament tube to connectors on the back of the filament box as shown below. Connect the blue terminal cable to the left side, the black terminal cable to the right side, and the filament tube to the center.

After installation, fabWeaver type A530 recognizes that the leftmost filament box is Box 1 and the rightmost one is Box 4, and that Boxes 1 and 2 on the left are for Nozzle 1, and Boxes 3 and 4 on the right are for Nozzle 2.

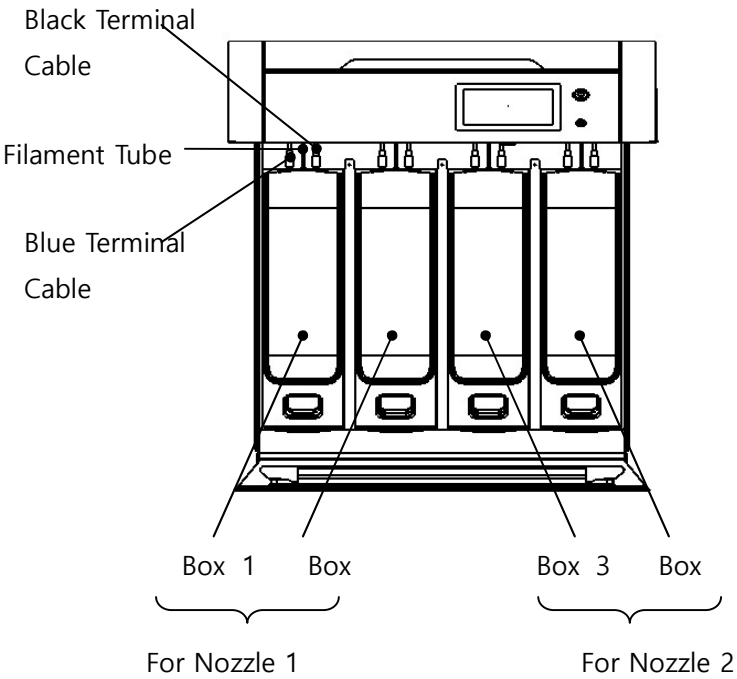

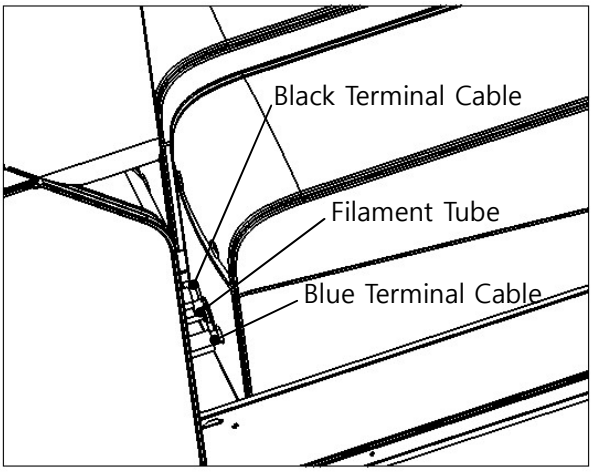

3. Use

For the information on how to install and remove filament boxes and spools and load and unload materials, see the user manual of fabWeaver type 530.