FabWeaver

type A530

User Manual

- Please read the user manual before using the pro duct and keep the manual in an easily accessible place.

fabweaver.com

Cautions for Safe Use

Please follow the instructions below when using the product.

⚠ Warning: Failure to follow the instructions may cause death or serious injuries.

- Connect the power cord directly to the wall outlet. Do NOT use an extension cord.
- If the power cord or plug has been eroded or damaged, pull the plug to remove it. Do NOT remove covers or screws unless otherwise stated in this manual in order to avoid electric shocks or burns due to contact with parts inside the product.
- Do NOT touch nozzles and bed parts when printing. They are very hot, 100℃ or higher, and may burn your skin. Do NOT place the product in a humid place because it may cause deformation or malfunction of the product. Be careful NOT to let metal items such as necklaces, coins, keys, and watches come into contact with the electrical terminals.
- Do NOT lift or move the product by holding its internal parts.
- For the following situations, turn off the power and remove the power plug:.
  - Something is spilled on the product.
  - Considering making a request for repair of the product.
  - The product cover is damaged.
- Dispose of the product at a designated store or proper recycling station.
- Turn off the power when not using the product for a long time or before leaving work. Failure to do so may cause unexpected fire.

⚠ Caution: Failure to follow the instructions may cause minor to serious injuries or property damage.

- Protect the product in humid or wet places exposed to rain, snow, etc.
- Remove the power cord from the wall outlet before moving the product. Be careful NOT to damage the power cord while moving the product.
- When unplugging the power cord from the wall outlet, do NOT pull by the cable. Pull by the plug.
- Do NOT let paper clips, staples or other small metal objects fall into the product. Take caution when cleaning inside the product.
- Do NOT dispose of the product or consumables as household wastes.
- Dispose of them at a designated store or proper recycling station.
- The inside of the product may be extremely hot. Do NOT touch parts labeled "Caution: HOT" or anywhere near the parts. Otherwise, you may suffer burns.
- The product meets the high quality and performance standards. It is strongly recommended to use ONLY genuine parts available in our designated stores.
- It is not allowed to use the product in places easily accessible by children.

Before Use

Please read this manual carefully before using the product and keep it close at hand.

You MUST read the safety precautions before using the product for safe and correct u
se.

Copyrights and Restrictions

1. This user manual is created for user convenience, and the images and descriptions in this manual may differ from the actual product you receive.
2. Descriptions in this user manual may subject to change without prior notice. We are not lia
ble for any direct or indirect damages caused by the improper handling and operation of thi
s product or consequential damages caused by the user's negligence.
3. Copyrighted materials may be printed for personal use or at home within the scope perm
itted by applicable laws. Other illegal reproduction is prohibited by law.
4. The above description is an example only and may not include the whole content. We hold no liabilit
y for its accuracy and completeness. Should you have any questions about the legality of printing an
object, please seek legal advice.
5. We are not liable for any damages or losses caused by unauthorized modification.

Table of Contents

Before Use

1. **Introduction** ---------- 1
2. **How to Read the User Manual** ---------- 2
   - Symbol ---------- 2
   - Other Information ---------- 2
3. **Safety Information** ---------- 3
4. **Cautions before Using the Product** ---------- 5
   - 4.1 Installation ---------- 5
   - 4.2 Movement ---------- 6
   - 4.3 Power Switch ---------- 7
5. **How to Handle Consumables** ---------- 8
6. **Cautions when Using the Product** ---------- 9
7. **Ventilation** ---------- 10
8. **Notice** ---------- 11
9. **Disposal of Used Battery** ---------- 13
10. **Notice for Wi-Fi Module** ---------- 14
11. **USB Flash Drive** ---------- 16

Chapter 1. Preparation for Use

1. **Specifications** ---------- 1-2
   - 1.1 Printing ---------- 1-2
   - 1.2 Temperature/Speed ---------- 1-2
   - 1.3 Main Body ---------- 1-2
   - 1.4 Software/Support ---------- 1-2
   - 1.5 Default of Print Layer Thickness ---------- 1-2
2. **Basic Components** ---------- 1-3
3. **Component Name** ---------- 1-4
4. **Installation (Power Supply, Filament Box Installation and Slicer Program Installation)** ---- 1-7
   - 4.1 Power Supply ---------- 1-7
   - 4.2 Filament Box Installation ---------- 1-7
   - 4.3 Program Installation ---------- 1-9

Chapter 2. UI Menu Description

1. **UI Home Screen Description** ---------- 2-2
   - 1.1 Default Display Menu ---------- 2-2

2. Status Bar 2-2
3. Navigation Bar 2-3
4. Details Screen 2-3
2. UI Menu Description 2-4
2.1 Print 2-5
Screen Configuration 2-5
File Import 2-5
2.2 Queue 2-6
Screen Configuration 2-6
Adding a File to Queue 2-7
Deleting a File from Queue 2-7
Changing File Order 2-7
2.3 Materials 2-8
Screen Configuration 2-8
Nozzle Information Checking 2-8
Material Loading 2-9
Material Unloading 2-10
2.4 Tools 2-11
Screen Configuration 2-11
XYZ 2-11
Extruder 2-12
Nozzle Cleaning 2-13
Chamber Cleaning 2-14
Self-Check 2-14
Bed Leveling 2-15
Nozzle Calibration 2-16
Z Offset 2-17
Test Print 2-18
2.5 Settings 2-19
Time Settings 2-20
Network 2-21
Cloud 2-22
Status Bar 2-23
Information 2-24

Chapter 3. Print

1. Print 3-2
1. Printing Files in USB Flash Drive 3-2
2. Printing via PC 3-5

1.3 Combination of Loadable and Printable Materials ---------- 3-5

Chapter 4. Output Checking

1. Output Checking ---------- 4-2
1.1 Output Separation ---------- 4-2
1.2 ARS Removal ---------- 4-4
1.3 Print Quality Improvement ---------- 4-5

Chapter 5. Maintenance

1. Cleaning ---------- 5-2
1.1 Maintenance of Cleaning Case ---------- 5-2
1.2 Internal Cleaning ---------- 5-2
1.3 Regular Inspection ---------- 5-2
Inspecting Oil/Grease ---------- 5-2
1.4 Cleaning Flexible Bed and Nozzle ---------- 5-2
2. Error Messages and Solutions ---------- 5-3
3. Troubleshooting ---------- 5-4
3.1 How to Handle Error 401 ---------- 5-4
3.2 Filament Fragment Stuck in Junction ---------- 5-6
4. How to Replace Consumables ---------- 5-8
4.1 Bed Replacement ---------- 5-8
Removal and Installation of Flexible Bed ---------- 5-8
4.2 Filter Replacement ---------- 5-8
4.3 Spool Replacement ---------- 5-11
4.4 Nozzle Replacement ---------- 5-15
4.5 Nozzle Pad Replacement ---------- 5-20

Chapter 6. Appendix

1. Filament Type (Material and Color) ---------- 6-2

1. Introduction

This manual describes how to use the product and cautions when using the product in detail. For user safety and convenience, please carefully read and understand this manual before using this product. In addition, please keep this manual close at hand.

Important

- Descriptions in this user manual may subject to change without prior notice. We are not liable for any direct or indirect damages caused by improper handling and operation of the product or consequential damages caused by the user's negligence.
- Copyrighted materials may be printed for personal use or at home within the scope permitted by applicable laws. Other illegal reproduction is prohibited by law.
- The above description is an example only and may not include the whole content. We hold no liability for its accuracy and completeness. Should you have questions about the legality of printing an object, please seek legal advice.

Note

- Features of the product described in this manual may differ from the actual product you receive. Some options may not be available in some countries. Contact your local dealer for availability of options. Some units may be optional depending on the user's country. Contact a designated local after-sales service center for availability of units.
- Specific product types may not be available in some countries. Contact your local dealer for details.
- The product provides two unit display formats. This user manual uses meter (m) and Celsius (℃).
- The fonts used in this user manual and the GUI of the product is the Nanum provided by Naver.

2. How to Read the User Manual

Symbol

This user manual uses the following symbols:

Warning

- Indicates important safety precautions which, if not followed, may result in death or serious injuries. Please carefully read the instructions.

  Refer to the safety precautions for safe use of this product.

Caution

- Indicates important safety precautions which, if not followed, may result in minor injuries or property damage. Please carefully read the instructions.

  Refer to the safety precautions for safe use of this product.

Important

- Indicates cautions for using this product regarding filament supply errors or data loss, etc. Please carefully read the instructions.

  Symbols indicate the information required before operating this product.

Note

- Symbols indicate the description of product functions and the actions against user errors.

Reference

- This symbol is at the end of a paragraph. It indicates the location of related description.

[ ]

This indicates messages or menus displayed on the LCD control panel of the product.

【 】

This indicates the name of each function displayed on the LCD control panel of the product.

Other Information

Some figures used in this manual may omit their images for easily understanding them. The UIs shown in this manual may differ from those of the actual product.

3. Safety Information

Connect the power cord to a properly grounded outlet that is near to the product and easily accessible. Do NOT use or store this product in wet or humid places.

⚠ Caution Hot surface

- Contact with it may cause burns.
- Follow the instructions below to avoid burns.
  - The inside of the product may be extremely hot. Let the surface cool before handling to avoid injuries.

    (Do NOT touch nozzles and bed parts when printing. They are very hot, 100℃ or higher, and may burn your skin.)
  - Do NOT put any body parts or objects into the printer because the motor or bed is hot while this product is in operation.
  - Do NOT touch any parts of this product except the bed when the power is on. If you need to touch the bed while the power is on, let the bed and nozzle cool to room temperature first.
  - After printing is completed, follow the instructions displayed on the LCD control panel. Do NOT touch the bed or bed handle until a instruction is displayed.
  - If you need to touch any part other than the bed, turn the power is off first. Unplug the power cord and wait until the bed and nozzle cool down to room temperature.

⚠ Caution Risk of pain

- Contact with this part may cause pain.
- Follow the instructions below to avoid pain or product damage.
  - Do NOT open the front and top doors when this product is in operation.
  - Do NOT touch any parts of this product except the bed when the power is on.
  - If you need to touch any part other than the bed, turn the power is off first. Unplug the power cord and wait until the bed and nozzle cool down to room temperature.
  - After turning the printer off using the power switch, unplug the power cord from the outlet.
  - Before moving this product, disconnect all cords and cables connected to this product.
  - Use only the power cord provided with this product or a replacement one approved by the manufacturer.
  - Do NOT put any body parts or objects into this product because the motor, bed, or nozzle moves at high speed while this product is in operation. If hair, necklaces, small objects, etc. fall into this product, a user may be injured or the product may be damaged.
  - If problems such as being caught or malfunction occur while this product is in operation, immediately press the [Pause] or [Stop] button on the control panel (UI).

⚠ Caution Risk of electric shock

- Contact with this part may cause electric shock.
- Follow the instructions below to avoid electric shock.
  - Before installing an additional option after installing this product, turn the power off and disconnect the power cord from the outlet. If a device is connected to this product, turn its power off and disconnect the cable connected to the product.
  - This product is successfully design-tested and is only approved for using the components meeting strict international safety standards. The safety function of some parts may not be clear. The manufacturer is not liable for using other replacement parts.
  - When cleaning the inside and outside of this product, disconnect the power cord from the outlet to prevent electric shock and all cables connected to this product.
  - TURN OFF the power before removing a nozzle from the printer. Electrical damage may occur in the internal part of the nozzle.

⚠ Caution Risk of pain

- Do NOT twist, bend, step on, or place heavy objects on the power cord.
- Be careful NOT to have the power cord stripped off or overloaded.
- Do NOT have the power cord get jammed into any gaps between furniture and wall.
- Improper use of the power cord may cause fire or electric shock.
- Check the power cord regularly. Before inspecting this product, disconnect the power cord from the outlet first.
- For any problems not described in this manual, contact an expert.

⚠ Caution Risk of pain

- Putting your head inside this product during its operation may cause pain.
- Follow the instructions below to avoid pain or product damage.
  - The bed moves up and down so that do NOT put your head inside this product during its operation.
  - Do NOT open the front door during printing.
  - If you need to go inside the product for maintenance, turn the power is off first. Unplug the power cord and wait until the bed and nozzle cool down to room temperature.

⚠ Caution Risk of pain

- When working on the top of this product, you may be pinched or fall, causing pain.
- Follow the instructions below to avoid pain or product damage.
  - Be careful NOT to fall when operating the top door or nozzle.
  - Be careful NOT to be pinched between nozzle tubes when closing the top door.

⚠ Caution Risk of pain

- Contact with this part may cause pain.
- Keep away from this part during operation to avoid pain or product damage.

4. Cautions before Using the Product

1. Installation

Caution

- Install the product in a well-ventilated place.
  You may smell an odor when this product is being used. It is not harmful, but, if you need to print for a long time in a poorly ventilated space, adequate ventilation is needed.
- Place the product on a firm table that can sufficiently support its load.

Important

- Install the product so that the vents is kept at least 10 cm away from the wall or surrounding devices. Secure proper space around the product for easy ventilation and operation.
  Use the product in an environment at a temperature of 16-29℃ and humidity of 20-70% RH. Do NOT install or use the product outdoors.

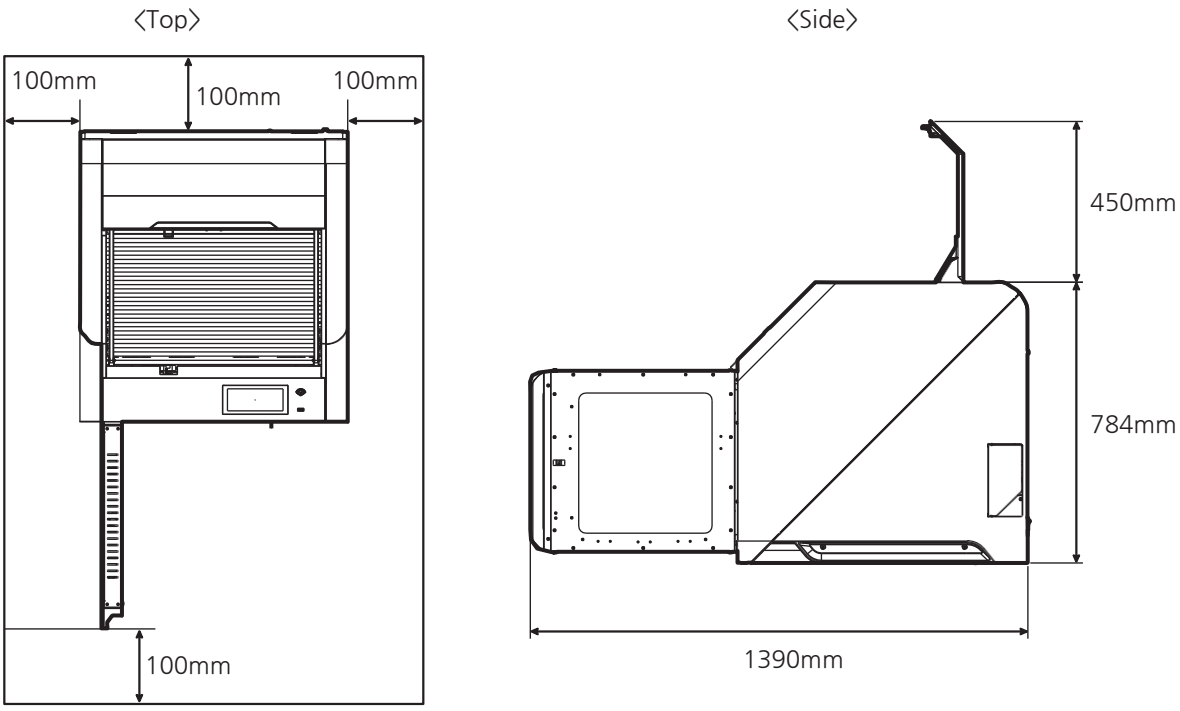

2. Movement

1. Turn off the product.
2. Disconnect the power cord and various cables connected to the product.
3. Check if the flexible bed is firmly mounted in the printer, and close the front and top doors.
4. Four people hold each carrying handle on each side of this product and lift it slowly with the product bottom facing down.

⚠ Caution

- Before moving the product, unplug the power cord from the outlet and check if it is disconnected from the printer. When lifting this product, be careful not to damage your spine by bending your knees sufficiently.

  When moving the product, hold the handle on the upper section of this product.
- When carrying the product by packing or long distance, repack it in the original box while placing the product with the bottom facing down for safe transportation.
  After packing this product, do NOT tilt the box or turn it upside down. It may cause the product malfunction or damage.
- As the product is heavy, four or more persons are needed to carry it.

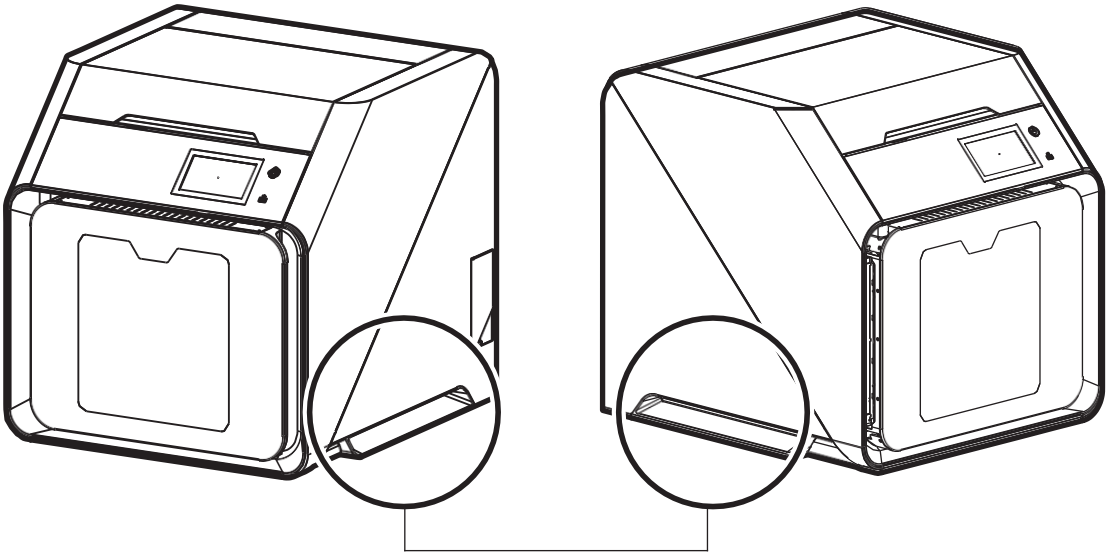

3. Power Switch

Before turning on the power switch, check if the power cord is firmly connected to the outlet. Press ‘ ’ (ON) of the power switch (on the right on the back of the product) to turn on the power. Press ‘○’ (OFF) of the power switch to turn off the power.

'ON' IEC 60417-5007 (DB: 2002-10)

○ **'OFF'** IEC 60417-5008 (DB: 2002-10)

The switch used in this product meets the requirements of the symbol standards. However, the switch is rotated 90 degrees counterclockwise so that the horizontal straight bar indicates 'ON.' Do not confuse the meaning with the horizontal straight bar ' .'

Switch
Standard
IEC 61058-1

Operating direction for **‘OFF’** or **‘OFF’** position - Circle, ○

Operating direction for **‘ON’** or **‘ON’** position - Straight bar,

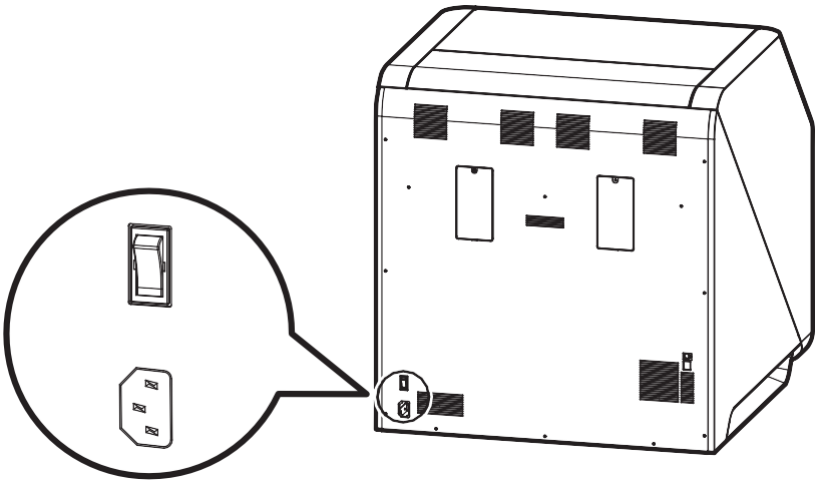

⚠ Warning

- Do NOT touch the power switch with wet hands when connecting or disconnecting the power cord. It may cause electric shock.

Important

- After turning off the power, wait for about 5 seconds before turning on the power.
- If the product is not used for a long time or is to be moved, turn off the power and disconnect t he power cord from the outlet.

5. How to Handle Consumables

It is recommended to store this product in a cool and dry place at a temperature of 18℃~24℃ and relative humidity of 50% or less to maintain the quality of its filament. Unused filaments should be stored with silica gel in the enclosed ziplock bag.

⚠ Warning

- Do NOT burn filaments. It may ignite and cause a major fire or serious burn.

⚠ Caution

- Keep this product out of reach of children.
- If you have skin irritation after touching the filament, go to the doctor.

Important

- Do NOT store filaments in the following places:
  - Places exposed to flames
  - Places exposed to direct sunlight
  - Places where temperature or humidity may increase
  - Places where sudden temperature change may occur
  - Dusty places
  - Inside a vehicle for a long time
- Be careful NOT to apply physical impact or vibration to filaments.
- Do NOT unpack a filament until it is ready to be used.

6. Caution when Using the Product

⚠ Caution

- The nozzle and bed are very hot when this product is in operation.
  When removing an output or examining the inside the product, be careful NOT to touch the nozzle and bed. It may cause burns.
- Do NOT operate this product in a way not described in this manual.
- Do NOT open the door while this product is in operation.

7. Ventilation

⚠ Caution

- Use this product in a well-ventilated place.
- Do NOT block vents for heat dissipation of the product. If the heat dissipation is blocked, the internal temperature of this product may increase and cause malfunctions.
- In general, the product generate some gaseous substances.
  Thus, when the product is first used, pay attention to the ventilation in workplace where the product is located. If much works should be done, it is recommended not to stay in the place for as far as possible.

8. Notice

❖Temperature/Humidity Information

Operating Temp.	16-29℃ 20%RH-70%RH
Storage Temp.	-30-40℃, 15% RH-85% RH or lower (no condensation, no contact with the ground)

❖Product Disposal

Do not dispose of the printer and consumables as normal household wastes. Contact your local store for the information on the disposal or recycling of this product.

❖Notice of Electromagnetic Interference (EMI)

This product is a Class A device.

Class A device: This device is registered for electromagnetic wave conformity for business purposes, and is intended to be used in areas other than residence.

① FCC COMPLIANCE STATEMENT

This device complies with part 15 of the FCC Rules. Operation is subject to the following two conditions : (1) This device may not cause harmful interference, and (2) this device must accept any interference received, including interference that may cause undesired operation.

② INFORMATION TO USER

This equipment has been tested and found to comply with the limits for a Class A digital device, pursuant to part 15 of the FCC Rules. These limits are designed to provide reasonable protection against harmful interference in a residential installation.

This equipment generates uses and can radiate radio frequency energy and, if not installed and used in accordance with the instructions, may cause harmful interference to radio communications. However, there is no guarantee that interference will not occur in a particular installation. If this equipment does cause harmful interference to radio or television reception, which can be determined by turning the equipment off and on, the user is encouraged to try to correct the interference by one m ore of the following measures :

- Reorient or relocate the receiving antenna.
- Increase the separation between the equipment and receiver.
- Connect the equipment into an outlet on a circuit different from that to which the receiver is connected.
-Consult the dealer or an experienced radio/TV technician for help.

③ CAUTION

Any changes or modifications not expressly approved by the manufacturer responsible for compliance could void the user's authority to operate the equipment.

④ This product has the certification issued under the authority of the FCC by one of Certification Body.

FCC ID : 2AB83-TYPEA530

⑤ IC Compliance

This Class [A] digital apparatus complies with Canadian ICES-003.

Cet appareil num rique de la classe [A] est conforme la norme NMB-003 du Canada

❖ Wireless LAN Specifications

This wireless machine may be affected by electromagnetic interference so it should not be used for life saving services.

This notice applies only to models with a Wifi module.

❖ WLAN Notice

Exposure to radio frequency radiation:

The following notice is applicable if your printer has a wireless network card installed.

The radiated output power of this device is far below the FCC radio frequency exposure limits.

A minimum clearance of 20 cm (8 inches) must be maintained between the antenna and any persons for this device to satisfy the RF exposure requirements of the FCC.

❖ Wireless LAN Standard

As radio devices may cause electromagnetic interference, we cannot provide services related to personal safety.

❖ Power Consumption

The characteristics of the power consumption of this product is described as follows:

Mode	Description	Power Consumption (W)
Print Mode	Material is being printed.	Max. 1,050W
Ready Mode	Printing is in standby.	70W
On Mode	The power plug has been connected to the outlet, but the power switch is on.	0.7W
Off Mode	The power plug has been connected to the outlet, but the power switch is off.	0.5W

The power consumptions listed in the above table are average measurements over time. Instantaneous power consumption may be considerably higher than the average.

❖ Inactive Mode

Products with Inactive mode may still consume small amount of power even in Inactive mode. Thus, to completely stop power consumption, disconnect the power cord from the outlet.

❖ Total Energy Consumption

It is useful to calculate the total energy consumption of this product.
Electricity bills are charged by watt (W). Thus, to calculate the energy consumption, multiply the time this product spent in each mode by the power consumption.

Total energy consumption is the sum of energy consumption in each mode.

❖ Condensation

If there is a sudden change in the ambient temperature, tiny water droplets may form inside and outside the product.
Wipe off the water droplets on the outside, open the front and top doors and wait until the water droplets on the inside disappear.

9. Disposal of Used Battery

There are lithium batteries in the control board of this product.
Used batteries need to be disposed of in an eco-friendly way according to the manufacturer's instructions. To replace batteries, contact a service technician.

10. Notice for Wi-Fi Module

❖ A Wi-Fi module, compatible only with fabWeaver models, is included.

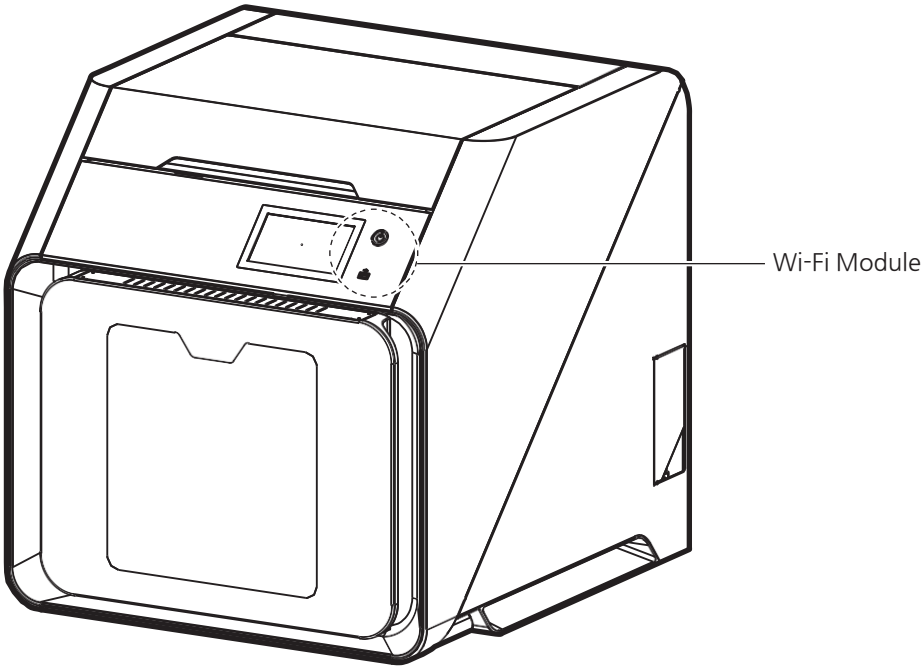

Important

- As this module may cause radio interference, it should not be used for any purposes related to human life.
- Be careful NOT to damage this module by water, moisture, or other liquids.
- Be careful NOT to damage this module by direct sunlight, high temperature, or fire.

Warning

- We are not liable for any damages or losses caused by unauthorized modification.

Caution

- This module is so mounted that the possibility a person contact with it is minimized to prevent he or she from being exposed to radio waves that exceed FCC RF exposure limits.

Important

Frequency	IEEE 802.11b: 2412MHz - 2462MHz IEEE 802.11g: 2412MHz - 2462MHz IEEE 802.11n (20MHz): 2412MHz - 2462MHz IEEE 802.11n (40MHz): 2422MHz - 2452MHz
Power Density	IEEE 802.11b: 10mW (10dbm)/MHz IEEE 802.11g: 10mW (10dbm)/MHz IEEE 802.11n (20MHz): 10mW (10dbm)/MHz IEEE 802.11n (40MHz): 10mW (10dbm)/MHz

Number of Channels	IEEE 802.11b: 11 IEEE 802.11g: 11 IEEE 802.11n (20MHz): 11 IEEE 802.11n (40MHz): 7
Modulation	IEEE 802.11b: DSSS/CCK IEEE 802.11g: OFDM IEEE 802.11n (20MHz): OFDM IEEE 802.11n (40MHz) : OFDM
Power Consumption	5V 500mA (Maximum)
Dimensions	48.0 mm X 28.0 mm X 3.7 mm
Operating Temperature	0 - 60℃
Storage Temperature	-10 - 80℃

11. USB Flash Drive

1. Notice for Electromagnetic Interface (EMI)

.1 FCC Compliance Statement

This device complies with part 15 of the FCC Rules. Operation is subject to the following two conditions:

(1) this device may not cause harmful interference, and (2) this device must accept any interference received, including interference that may cause undesired operation.

1.2 Information of User

This equipment has been tested and found to comply with the limits for a Class B digital device, pursuant to part 15 of the FCC Rules. These limits are designed to provide reasonable protection against harmful interference in a residential installation.

This equipment generates, uses and can radiate radio frequency energy and, if not installed and used in accordance with the instructions, may cause harmful interference to radio communications.

However, there is no guarantee that interference will not occur in a particular installation.

If this equipment does cause harmful interference to radio or television reception, which can be determined by turning the equipment off and on, the user is encouraged to try to correct the interference by one more of the following measures:

- Reorient or relocate the receiving antenna.
- Increase the separation between the equipment and receiver.
- Connect the equipment into an outlet on a circuit different from that to which the receiver is connected.
- Consult the dealer or an experienced radio/TV technician for help.

1.3 Caution

Any changes or modifications not expressly approved by the manufacturer responsible for compliance could void the user′s authority to operate the equipment.

1.4 IC identification on Class of ITE

CANICES-3 (B) / NMB-3 (B)

1.4 Specification of Compatible USB flash drive for fabWeaver

- Please use the enclosed USB flash drive.
- The enclosed USB flash drive is in FAT32 format. The fabWeaver 3D printer does not support USB flash drives in NTFS format.
- The warranty will not be valid if a 3rd party USB drive is used.

2. How to Use the USB Flash Drive

1 Insert the USB flash drive into a PC and save a desired file in the USB flash drive.

Note

- A file to print is created through the Weaver3 Studio program.
- For the information on how to install and use the program, visit the website.

2 Insert the USB flash drive into the USB port.

<USB Flash Drive>

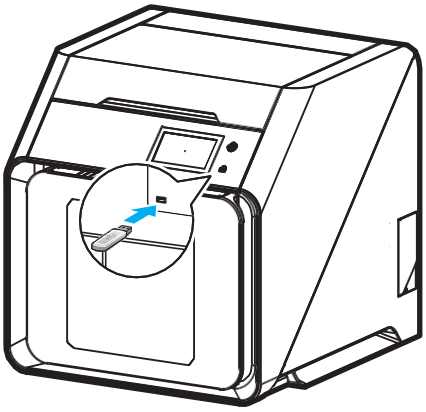

<USB Port Location>

Note

- For the information on printing, see "1. Printing" on page 3-2.

3. USB Certification Information

❖ **Information on the USB flash drive**

- **Model: 32GB-MB032**
- **Brand: fabWeaver**
- **Manufacturer: Shenzhen Chenge Electronics Co., Ltd.**
- **Memory size: 32 GB**

❖ **For certifications on this USB flash drive, see the information below:**

- **FCC ID: 2AB83-32GBMB032**
- **KC: R-R-SRS-32GBMB032**
- **CE**
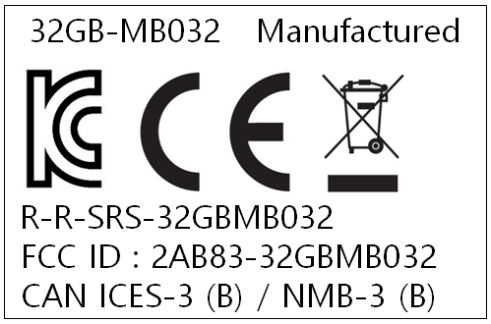
❖ **The USB flash drive is labeled as below.**