BP3580/BP3591

Start Guide

Version 1.01

1 Notice

1 This document is for informational and instructional purposes. ROHM CO., LTD. reserves the right to make changes in this document without prior notice. The reader should consult ROHM CO., LTD. to know whether any changes have been made.

2 ROHM CO., LTD. makes no warranty of any kind with regard to this document including, but not limited to, the implied warranties or merchantability and fitness for a particular purpose.

3 ROHM CO., LTD. does not warrant or represent that any license, either express or implied, is granted under any patent right, copyright or other intellectual property right of ROHM CO., LTD. and any other companies.

4 The copying or reproducing of any material in thi guide is strictly forbidden.

2 Introduction

Thank you for considering the products of ROHM CO., LTD. You read the following before using the products.

(i) Please use the products in the right way.

(ii) It is important to keep this guide.

This guide shows the way that connected between the BP3580/BP3591 and the UART(Universal Asynchronous Receiver) of attachment.

You can read the other guides the following.

■Specification for TCP/IP buit in WLAN（bu1805gu_tcpip_wlan_spec_vxxx.pdf）

■Specification for Hardware of BP3591（bp3591_hardware_spec-vxxx.pdf）

■Specification for Hardware of BP3580（bp3580_hardware_spec-vxxx.pdf）

■Specification for Hardware of BP359C

■Specification for Hardware of BP359D

■Specification for Hardware of BP359C-accessories

The above guides are possible to download from [saport of the WLAN] in the home page.（http://micro.rohm.com/jp/download_support/wireless_lan_system/）

3 Revision History

Ver.	Date	Descriptive Revision	Reviser
1.00	2012/07/25	First Edition	ROHM
1.01	2013/02/01	The item addition by change of an evaluation board	ROHM

4 Contents

1 Notice 2
2 Introduction. 3
3 Revision History 4
4 Contents 5
5 Set up 6
5. 1 Flow of Set up. 6
5. 2 【STEP1】Equipment Confirmation 6
5. 3 【STEP2】Assembly of BP359D 8
5. 4 【STEP2】 UART Connection 8
5. 5 【STEP3】Serial Communication Set up 11
6 Procedure for Writing Firmware 14
6. 1 BP3591 UART Power ON 14
6. 2 File Download. 15
6. 3 Run Program for Writing Firmware 18
6. 4 START 19
6. 5 Initialization Setting 20
7 Tutorial 21
7. 1 WLAN (Wireless Local Area Network) 25
7. 2 TCP/IP Connection 28

5 Set up

5.1 Flow of Set up

Flow of Set up is shown the following.

【STEP 1】 Equipment Confirmation

【STEP 2】 UART Connection

【STEP 3】 Serial Communication Set up

5.2 【STEP1】Equipment Confirmation

Please prepare the equipments as allow.

■Hardware

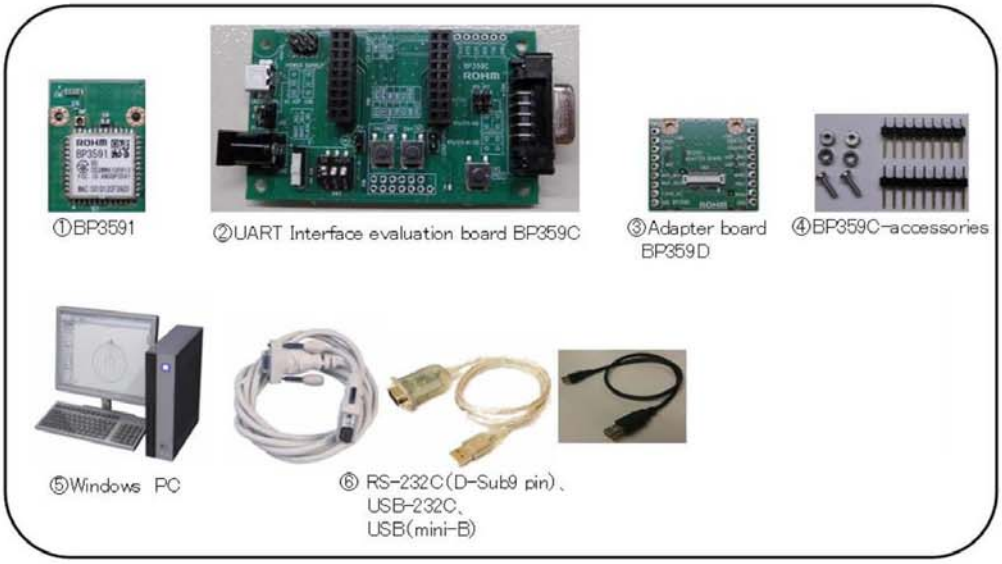

①～④ are purchased from ROHM CO., LTD or agency.

⑤～⑦ are necessary to prepare your own.

⑥ is conversion cable.

It recommends UC-SGT (made in ELECOM) and SRC06USB (made in Arvel).

■Software

名称	内容
① fwimagexxx_xxx_UART_TCPxx.fbin	It is a firmware. File name contains version number and it might be different from the one stated on the left column. It is possible to download from [saport of the WLAN] in the home page. （http://www.rohm.co.jp/index.html）
② BU1805_FLASH_WRITER_xxx_AREA_1.bin or BU1805_FLASH_WRITER_xxx_AREA_2.bin	It is a program that in order to write the firmware (FLASH MEMORY WRITER). File name contains version number and it might be different from the one stated on the left column. The end of file name (AREA1 or AREA2) shows the area of flash. The way of download is the same as above.
③ Terminal Software	Terminal software is possible that serial communication and transmission of binary file. This guide utilizes Tera Term that free software of Windows. Tera Term is able to download from the following. (http://sourceforge.jp/projects/ttssh2/)

5.3 【STEP2】Assembly of BP359D

The following describes assembly of BP359D. Please solder pin-header at BP359D as the following figure.

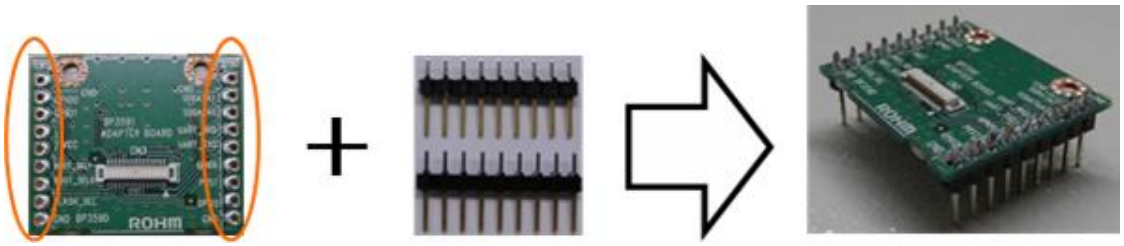

5.4 【STEP2】 UART Connection

This figure shows the part name of UART.

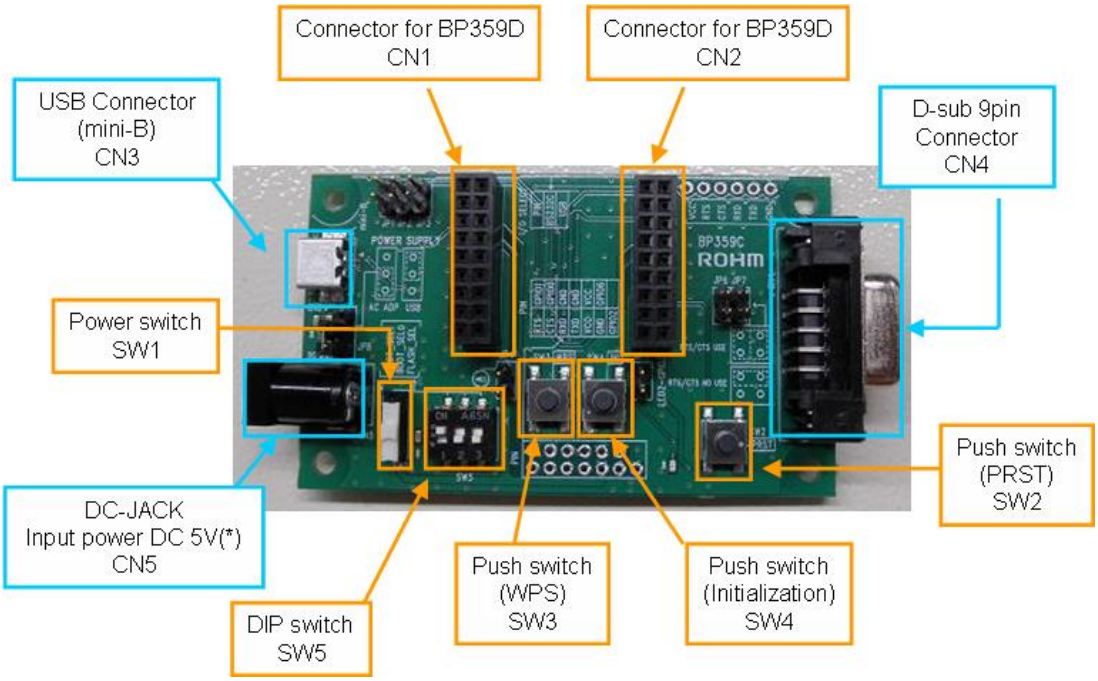

(Supplementary explanation)

Jumper PIN and DIP Switch of UART

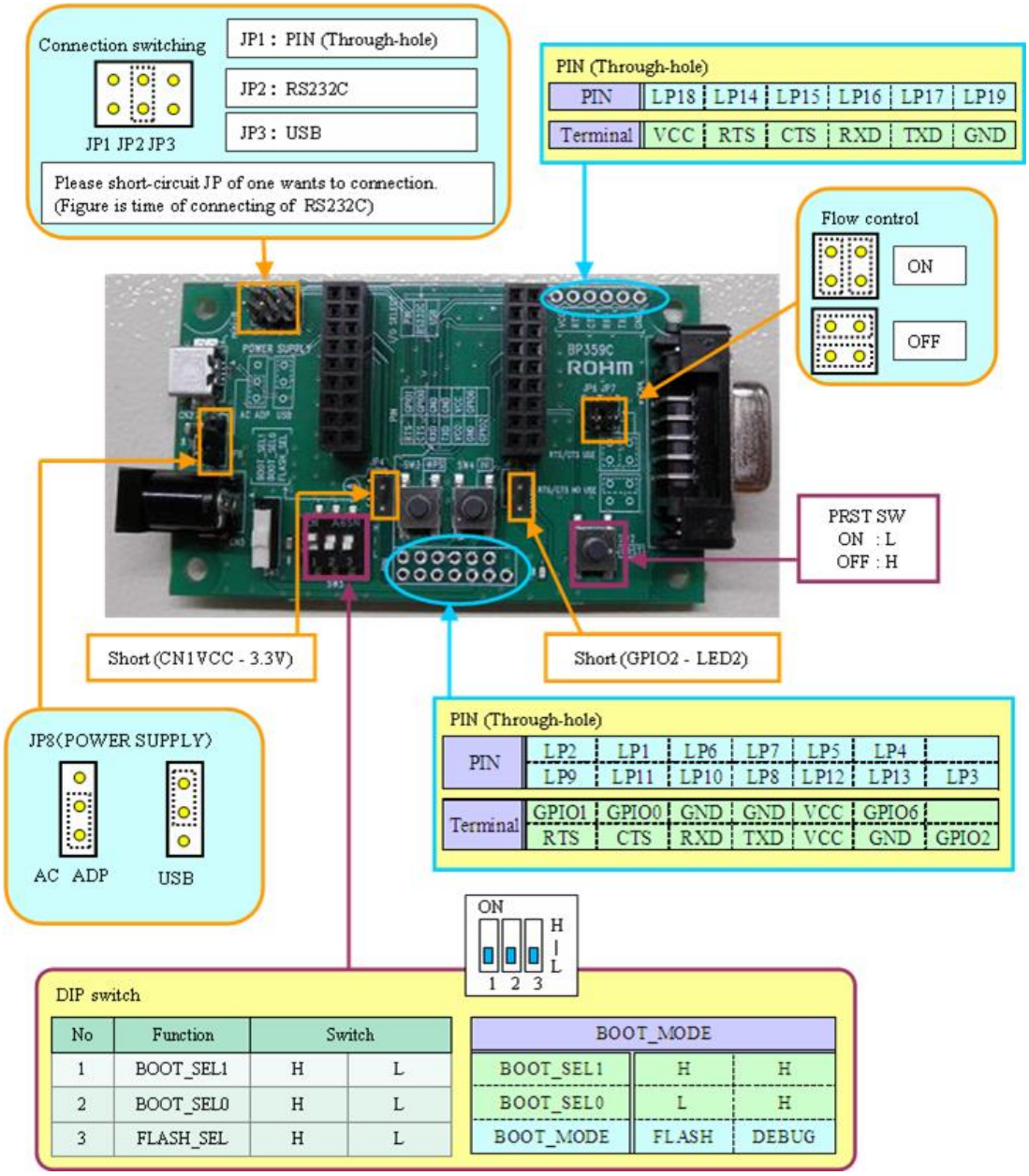

* The jumper pin is using to A2 series (made in HIROSE).

・Power supply : AC adapter

・Connection with PC : RS-232C

The following describes Connection BP359C.

Please set Jumper PIN such as the following figure.

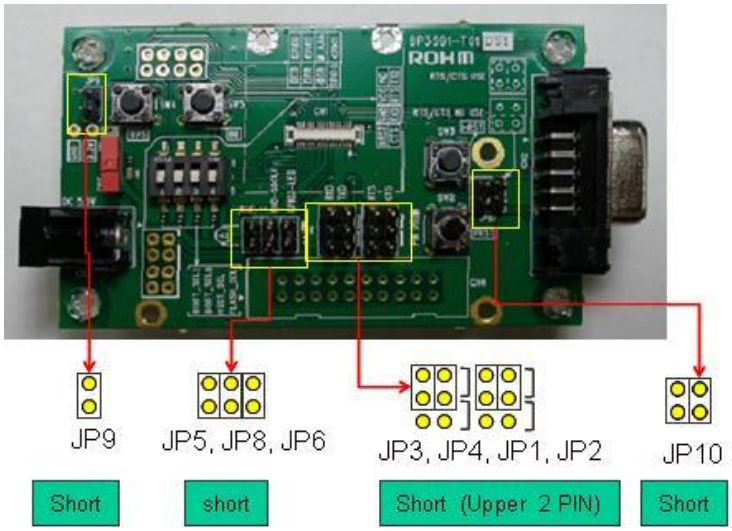

Please set the BP3591 and BP359D to P359C such as the following figure.

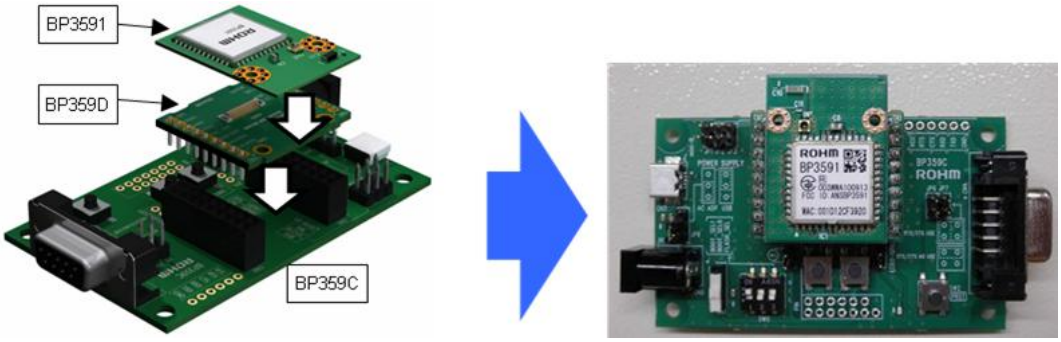

Please connect between UART and Power Supply, PC.

Please turn off Power Supply Switch (Red Switch) when connected UART.

Hardware setting is completed.

5.5 【STEP3】Serial Communication Set up

This guides utility Tera Term.

Tera term is possible to download the following.

http://sourceforge.jp/projects/ttssh2/

Please double-click the icon (Tera term) and start Tera Term after downloading.

Please go on the following process after starting.

icon

Double-click the icon on the Desktop.

Tera Term will be opened.

Initial setting value is modified by own environment.

It sets the setting value in order to operate normally.

It sets [Terminal].

Choose 『Setting』→『Terminal』.

It is opened the following setting display.

Please set such as comments of right figure after opening.

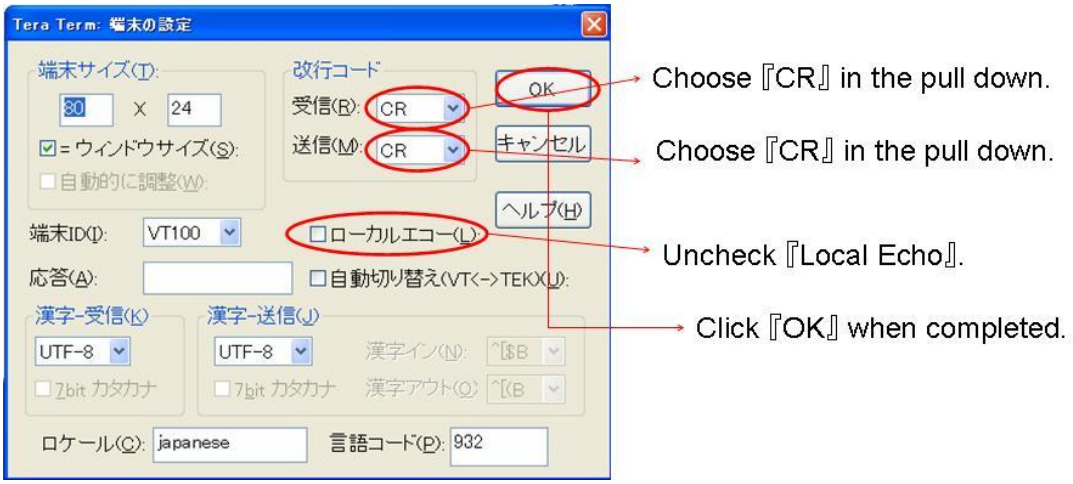

It sets [Serial Port].

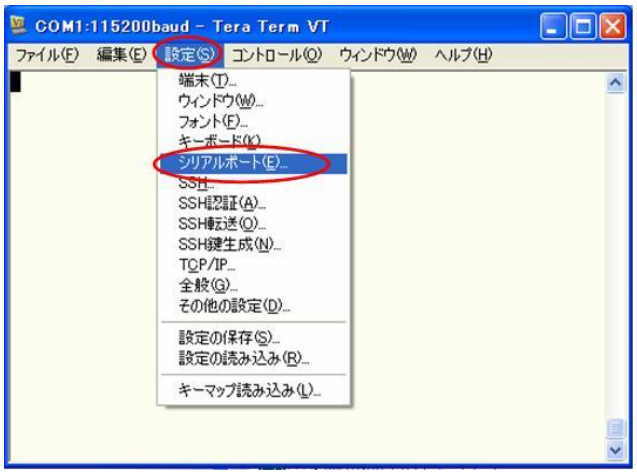

It is opened the setting display the bellow.

Please set such as comments of left figure after opening.

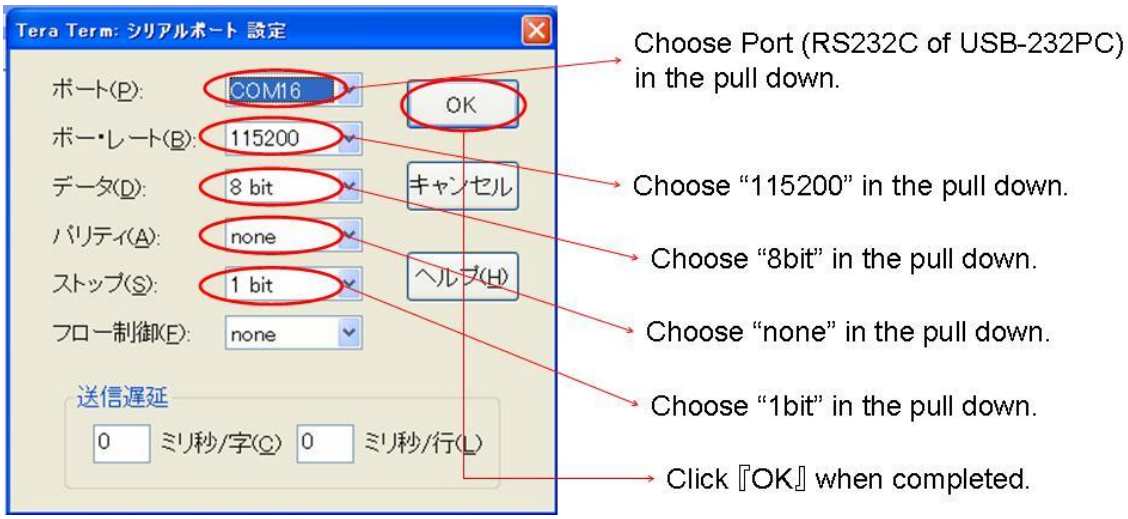

It can confirm Port (RS-232C or USB-232C) that choosed in above figure

To chose the Port (RS-232C or USB-232C) can confirm the bellow process when pull down Port (P) of above figure.

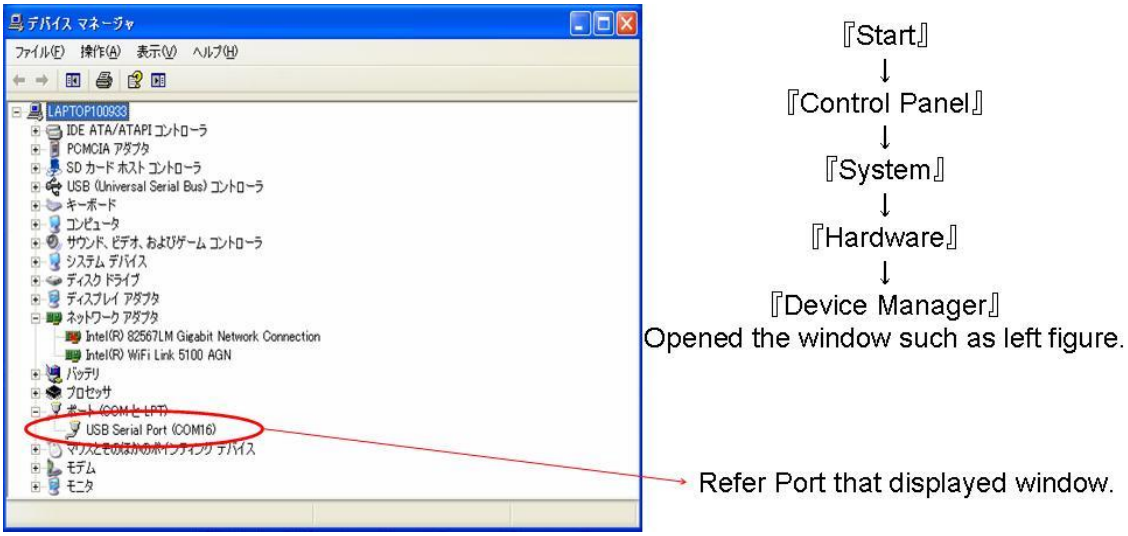

It is completed the setting of Hardware and Software

It explains about [Tutorial], [Process for Writing the Firmware] at next section.

6 Procedure for Writing Firmware

This section explains the process that writing the firmware to mounting the flash memory.
It prepares to operate the UART that used [Flash ROM Load Mode] (Next section ： in order to use at Tutorial).

The way of downloading Firmware to BP3580/BP3591 has two modes ([UART Host Load Mode], [Flash ROM Load Mode]).
It chooses this mode using DIP Switch on the UART.
It needs to choose the mode when integrated this products.
If you know the detail of this, please confirm [Specification for Hardware of BP3591（bp3591_hardware_spec-vxxx.pdf）11th section].

Please write Firmware in the following steps.

6.1 BP3591 UART Power ON

Please set DIP Switch of UART such as this figure.
Please turn on power supply switch (Red Switch).

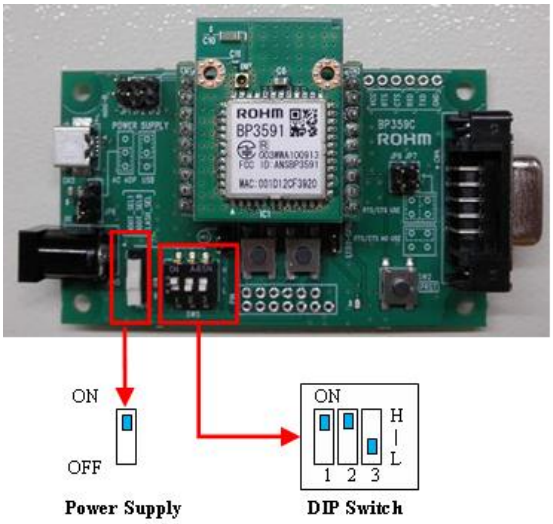

Set “HHL” such as left figure.
↓
Turn ON.

(Supplementary explanation)
Explanation DIP Switch

DIP Switch (terminal name)	Content
DIP SW[1] (B_SEL1)	Choose Start Mode[H:L]
DIP SW[2] (B_SEL0)	LL:USB、LH:SDIO、HL:FLASH、HH:UART
DIP SW[3] (FLASH_SEL)	Choose Flash Memory Area L:AREA1、H:AREA2

It is indicated to terminal software (Tera Term) such as the following.

```
/*********************************/
  IEEE802.11n 1x1 LSI BU1805
  Bootloader on ROM
  (C) 2010 ROHM CO.,LTD.
/*********************************/
H/w version  = 00000013
ROM version  = 3.0.2
reset_latch  = 00000003
mode3 Serial
ROM>
```

6.2 File Download

It downloads two files from PC to UART (BP3591).

Downloading has a procedure.

Please follow the below.

① Firmware (Ex:fwimagexxx_STA_UART_TCPjp.fbin)

② Program for Writing Firmware (Ex:BU1805_FLASH_WRITER_132_AREA_0.bin)

It explains the display of Tera Term in the writing form.

Underline and arrow plots are explaining.

■At first, it transmits Firmware. <PC→BP3591>

```
ROM> fld
Please send the firmware with Binary mode.
```

It inputs command "fld".

It transmits Firmware (Ex: fwimage424_STA_UART_TCPjp.fbin) by binary from terminal software after this display.

It explains the procedure about transmission of binary data.

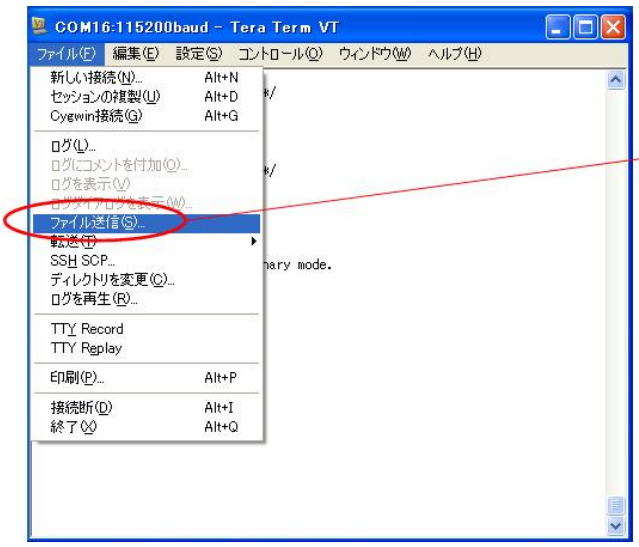

『File』
↓
Choose『File Transmission』.

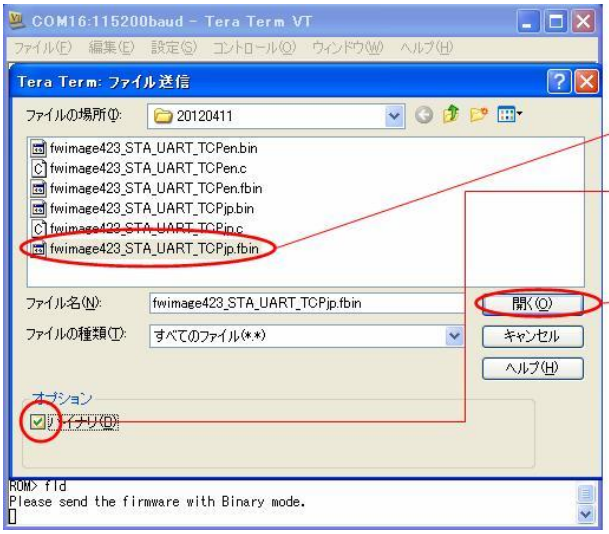

Choose Firmware for downloading.

Check-off『Binary(B)』.

Click『Open(O)』.

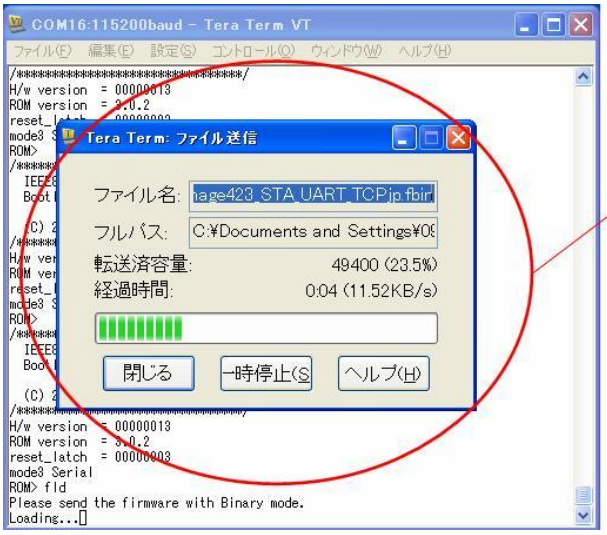

Opened the window while load.

File is loaded after transmitting binary data.

It is indicated the bellow on the terminal software after transmitting binary data.

The display of version or size is changed by downloading firmware

```
Loading.........completed.
 ver  3.6.2  (UART)
 load 0x10000000(209772 bytes)
ROM>
```

It transmits Program for Writing Firmware such as the above.

This program specify the area that to write flash memory when it written From BP3591 to external flash memory that integrated on the back of UART at next section.

■Next, it transmits Program for Writing Firmware <PC→BP3591>.

```
ROM> fld
Please send the firmware with Binary mode.
Loading.completed.
 ver  1.3.0  (FLASH)
 load 0x10040000(9012 bytes)
ROM>
```

It is completed the file download.

6.3 Run Program for Writing Firmware

In order to run Program for Writing Firmware, it writes the firmware to external flash memory that integrated on the back of UART.

■To run Program for Writing Firmware <BP3591→FLASH MEMORY>.

```
ROM> fgo
Flash Writer 1.3.0 Region 1
written 252KBytes.
finished writing successfully!
/*******************************/
  IEEE802.11n 1x1 LSI BU1805
  Bootloader on ROM

  (C) 2010 ROHM CO.,LTD.
/*******************************/
H/w version  = 00000013
ROM version  = 3.0.2
reset_latch  = 00000003
mode3 Serial
ROM>
```

→ **It inputs command "fgo".**

It will be indicated after transmission.

It turns off the power supply of UART after this.

Firmware is loaded to external flash memory.

6.4 START

Please set DIP Switch of UART such as this figure.

Please turn on the power supply (Red Switch).

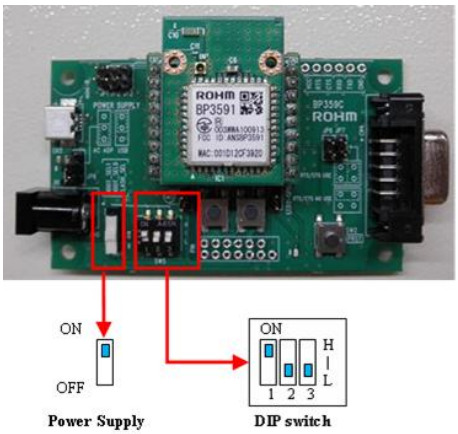

Set "HLL" such as left figure.
↓
Turn ON.

It is indicated to terminal software (Tera Term) the bellow.

```
*********************************/
  IEEE802.11n 1x1 LSI BU1805
  Bootloader on ROM

  (C) 2010 ROHM CO.,LTD.
/*********************************/
H/w version  = 00000013
ROM version  = 3.0.2
reset_latch  = 00000002
mode2 Flash region1 boot
/*********************************/
  UART-Wireless Conversion
  Copyright (C) 2010 ROHM CO.,LTD.
/*********************************/
+++++++++
#ver
Show: versions = 3.6.2
```

If you keep to push the space while [+++···],
[+++] will be stopped.
If you cannot push the space, please repeat the same as after pushing the SW2=PRST on the UART.

It inputs command "ver".
Please confirm that firmware is updated.

6.5 Initialization Setting

Please initialize the setting in order to revise the default setting information, if you change the version of firmware.

It initializes the bellow process.

```
#default permit
Default value of setting success.
```

→ **It initializes by"default permit".**

```
#save permit
Preservation of setting success.
```

→ **It saves the default setting information by "save permit".**

Writing firmware is completed by restarting (push the SW2=PRST on the UART).

*Please refer to 5.4th section (terminal name of UART).

7 Tutorial

This chapter describes the process that connected WLAN using BP3591, Access Point, and PC.
It needs to prepare the equipments except [5.2 section].

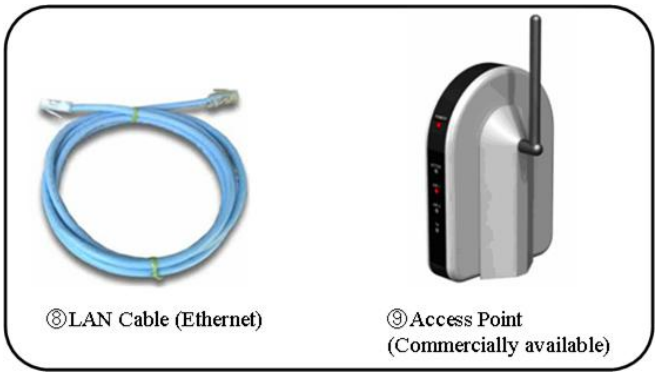

It connects between ①～⑦ and ⑧⑨ the bellow.

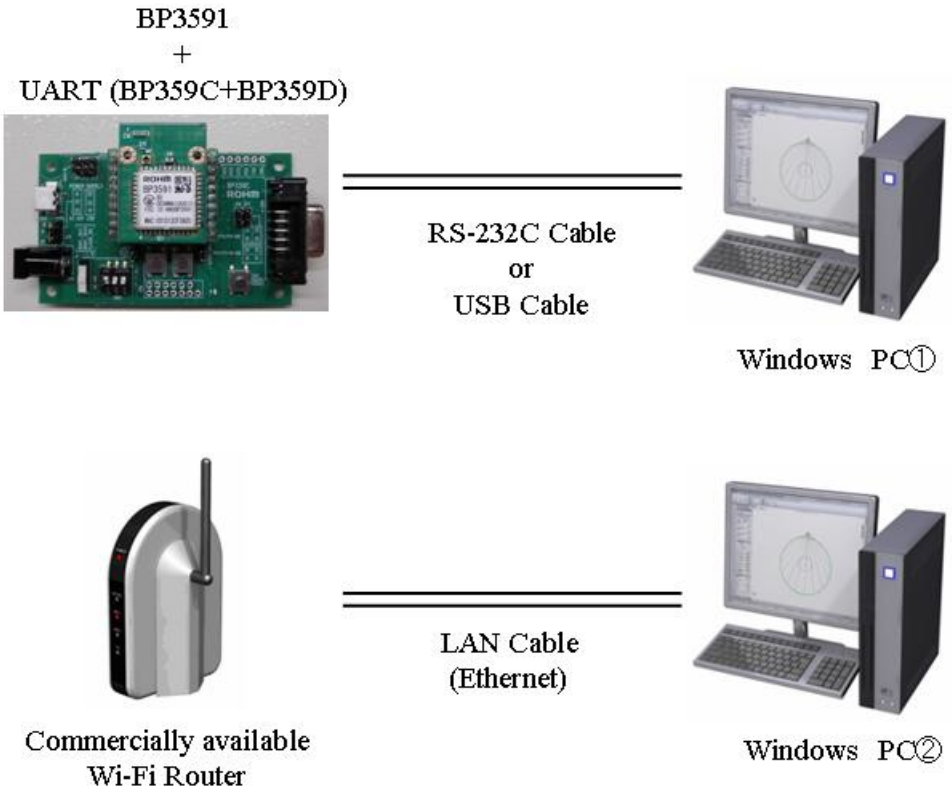

At first, it changes the setting of access point.

It sets the network of PC② the bellow process.

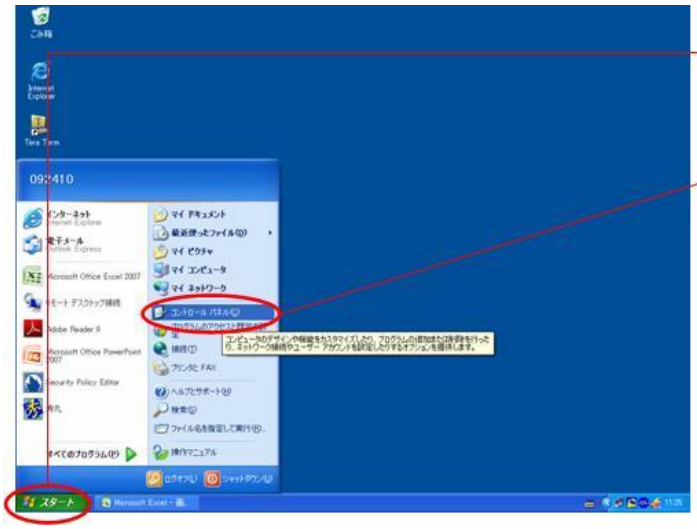

『Start』
↓
『Control Panel』

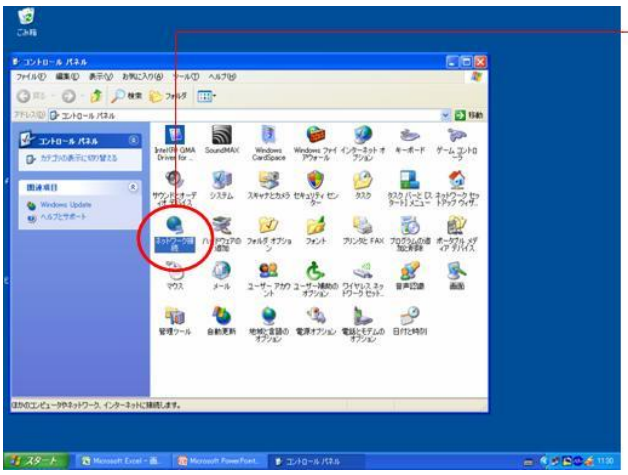

Double-Click『Network Connection』.

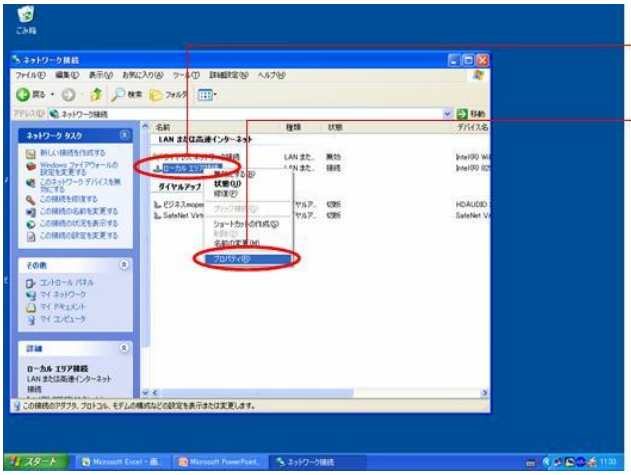

『Local Area Connection』
↓
Choose『Property』and Right-Click.

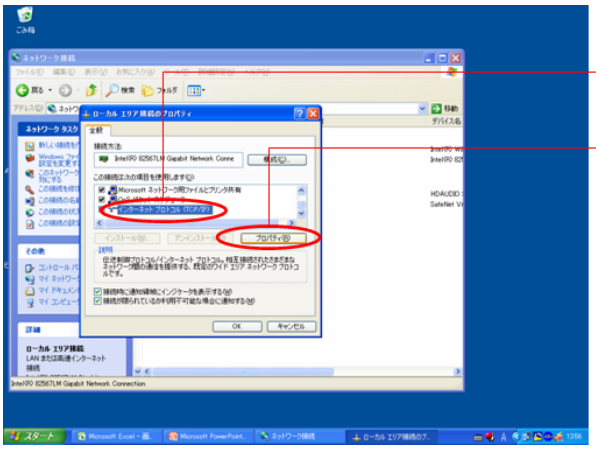

Point on『Internet Protocol (TCP/IP)』.

↓

Choose『Property』.

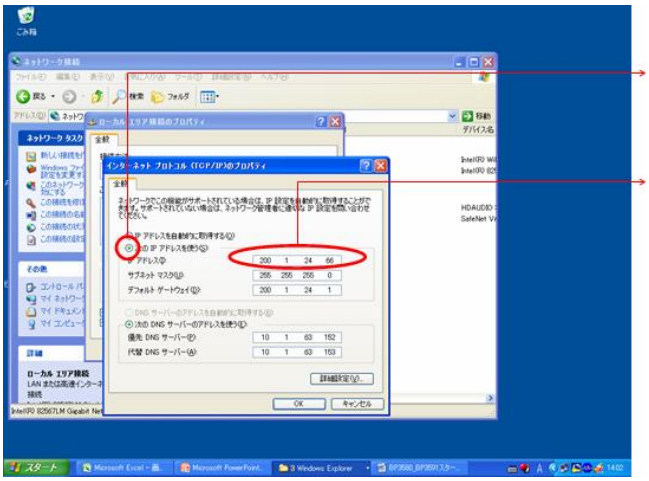

Check-off『Use next IP Address (S):』

↓

Input 『IP Address (I):』

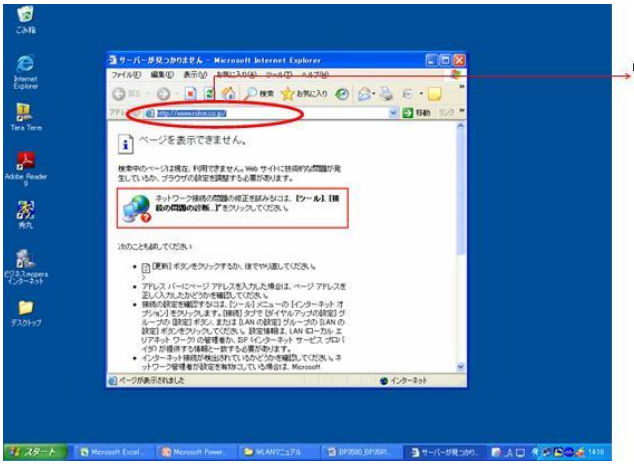

Open the Browser（Ex: Internet Explorer）.
Input Access Point.

Ex: 192.168.0.1

↓

Generally, Possible to access
WEB Setting Display of Access Point.

Please change the setting the bellow after opening the web page of access point.

Setting display is changed by difference of Wi-Fi router.

Please find the target items in the setting.

＜Setting items of access point＞

Setting Item	Value
Bandwidth	2.4GHz（B+G+N）
SSID	TEST
Channel	7
Security	none
IP Address	192.168.0.254

Please change the IP Address of PC② to the bellow after the above.

The process of changing is the same as above.

Setting Item	Value
IP Address	192.168.0.2

Please set the serial port by terminal software (Tera Term).

The way of setting is the same as [5.5 section Serial Communication Set up].

It is completed the setting of PC②.

7.1 WLAN (Wireless Local Area Network)

This figure shows the WLAN Connection between BP3591+UART and access point.

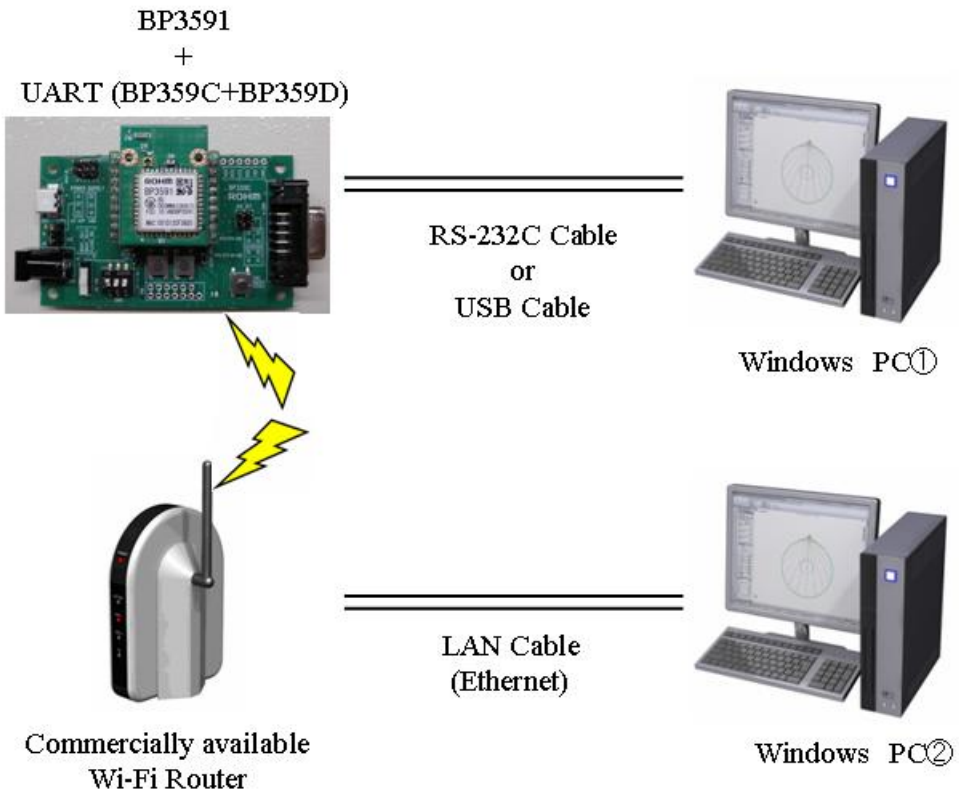

It is setting by terminal software (Tera Term) PC①

It turns on the power supply switch of UART while pushing the space key.

Please execute the bellow commands on the terminal software (Tera Term).

```
#wlan_type set infra
WLAN: BSS type success.

#wlan_ssid set TEST
WLAN: SSID success.

#save permit
Preservation of setting success.
```

→ **Set the BSS type to infra structure.**

→ **Set the SSID to "TEST".**

→ **Save the setting.**

Please restart UART.

It turns on while pushing the space key after turning off.

It confirms connecting to access point.

```
#wlan
WLAN: BSS type = infra
WLAN: Channel = 11(0x0b)
WLAN: SSID = TEST
WLAN: WEP key =
WLAN: PSK passphrase =
WLAN: Security = none
WLAN: Power management(PM) = off
WLAN: WPS PIN code =
WLAN: WPS Start code = stop
WLAN: Credential Connection = off
WLAN: MAC address = 00.1d.12.cf.20.55
WLAN: Connect status = Connected
```

Confirm the setting state by command "wlan".

It is indicated "Connected" when it has succeed connected to access point.

It confirms the setting that TCP/IP Network of PC① by terminal software PC①.

```
#ip
IP: DHCP = off
IP: address = 192.168.0.1
IP: Subnet mask = 255.255.255.0
IP: Gateway address = 192.168.0.254
IP: Current address = Static
IP: DNS address = 192.168.0.100
IP: protocol = tcps
IP: Host port = 16384(0x4000)
IP: Remote port = 16384(0x4000)
```

Confirm the setting state by command "ip".

Confirm IP Address.

Confirm both the protocol and the port number.

It restarts UART.

Please turn on while not pushing the space key after turning off.

```
#
/*********************************/
  IEEE802.11n 1x1 LSI BU1805
  Bootloader on ROM

  (C) 2010 ROHM CO.,LTD.
/*********************************/
H/w version  = 00000013
ROM version  = 3.0.2
reset_latch  = 00000002
mode2 Flash region1 boot
/*********************************/
  UART-Wireless Conversion
  Copyright (C) 2010 ROHM CO.,LTD.
/*********************************/
                          ┌──→ It is stopped [+++].
                          │
++++++++++++++++++++      It shifts to terminal mode .
```

7.2 TCP/IP Connection

It connects the PC① by terminal software (Tera Term) PC②.

IP Address is the same as [192.168.0.1].

Please click "[File] → [New Connection] "after opening the terminal software (Tera Term) PC②

It will be opened the bellow window

Please input the following after opening window.

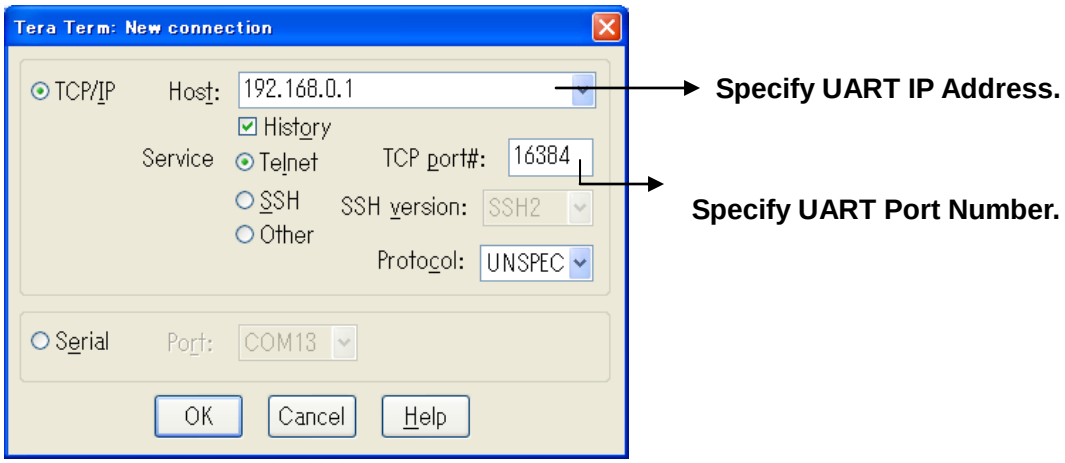

It inputs "hello world" by terminal software (Tera Term) PC① or PC② after TCP/IP connection.

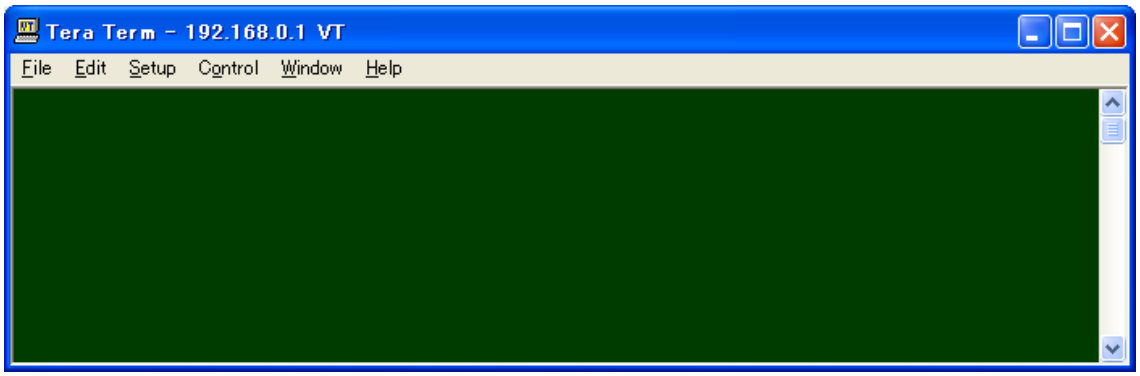

It is indicated "hello world" to other side PC.

It will be indicated to terminal software (Tera Term) if you input the sentence from here.

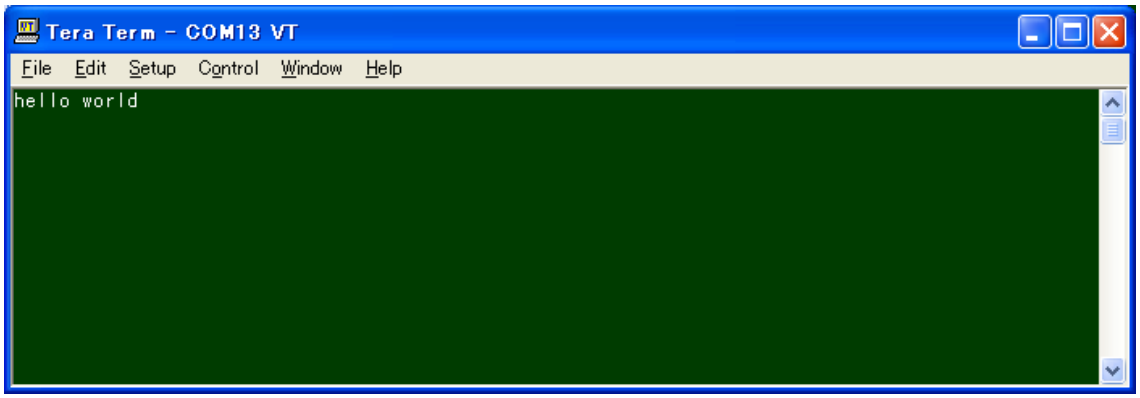

It is completed about tutorial.

FEDERAL COMMUNICATIONS COMMISSION INTERFERENCE STATEMENT

This equipment has been tested and found to comply with the limits for a Class B digital device, pursuant to part 15 of the FCC Rules. These limits are designed to provide reasonable protection against harmful interference in a residential installation. This equipment generates, uses and can radiate radio frequency energy and, if not installed and used in accordance with the instructions, may cause harmful interference to radio communications. However, there is no guarantee that interference will not occur in a particular installation. If this equipment does cause harmful interference to radio or television reception, which can be determined by turning the equipment off and on, the user is encouraged to try to correct the interference by one or more of the following measures:

-Reorient or relocate the receiving antenna.

-Increase the separation between the equipment and receiver.

-Connect the equipment into an outlet on a circuit different from that to which the receiver is connected.

-Consult the dealer or an experienced radio/ TV technician for help.

CAUTION:

Any changes or modifications not expressly approved by the grantee of this device could void the user's authority to operate the equipment.

This device complies with Part 15 of the FCC Rules. Operation is subject to the following two conditions: (1) this device may not cause harmful interference, and (2) this device must accept any interference received, including interference that may cause undesired operation.

RF exposure warning

This equipment must be installed and operated in accordance with provided instructions and the antenna(s) used for this transmitter must be installed to provide a separation distance of at least 20 cm from all persons and must not be co-located or operating in conjunction with any other antenna or transmitter. End-users and installers must be provide with antenna installation instructions and transmitter operating conditions for satisfying RF exposure compliance.

End Product Labeling

This transmitter module is authorized only for use in device where the antenna may be installed such that 20cm may be maintained between the antenna and users. The final end product must be labeled in a visible area with the following: "Contains FCC ID: 2ABA3-BP3580 ” and "Contains IC: 11553A-BP3580“

Information for the OEMs and Integrators

The following statement must be included with all versions of this document supplied to an OEM or integrator, but should not be distributed to the end user.

1) This device is intended for OEM integrators only.

2) Please see the full Grant of Equipment document for other restrictions.

This radio transmitter FCC ID: 2ABA3-BP3580 has been approved by FCC to operate with the antenna types listed below with the maximum permissible gain and required antenna impedance for each antenna type indicated. Antenna types not included in this list, having a gain greater than the maximum gain indicated for that type, are strictly prohibited for use with this device.

Antenna List

No.	Manufacturer	Part No.	Antenna Type	Peak Gain
1	Taoglas	MA600.A.ABC.006	Omni antenna	2.1 dBi for 2.4 GHz

Note: The antenna connector is Reverse SMA type.

Canada, Industry Canada (IC) Notices

This Class B digital apparatus complies with Canadian ICES-003 and RSS-210.
Operation is subject to the following two conditions: (1) this device may not cause interference, and (2) this device must accept any interference, including interference that may cause undesired operation of the device.

Canada, avis d'Industry Canada (IC)

Cet appareil numérique de classe B est conforme aux normes canadiennes ICES-003 et RSS-210.
Son fonctionnement est soumis aux deux conditions suivantes : (1) cet appareil ne doit pas causer d'interférence et (2) cet appareil doit accepter toute interférence, notamment les interférences qui peuvent affecter son fonctionnement.

Radio Frequency (RF) Exposure Information

The radiated output power of the Wireless Device is below the Industry Canada (IC) radio frequency exposure limits. The Wireless Device should be used in such a manner such that the potential for human contact during normal operation is minimized.
This device has also been evaluated and shown compliant with the IC RF Exposure limits under mobile exposure conditions. (antennas are greater than 20cm from a person's body).

Informations concernant l'exposition aux fréquences radio (RF)

La puissance de sortie émise par l’appareil de sans fil est inférieure à la limite d'exposition aux fréquences radio d'Industry Canada (IC). Utilisez l’appareil de sans fil de façon à minimiser les contacts humains lors du fonctionnement normal.
Ce périphérique a également été évalué et démontré conforme aux limites d'exposition aux RF d'IC dans des conditions d'exposition à des appareils mobiles (antennes sont supérieures à 20 cm à partir du corps d'une personne).

This radio transmitter IC: 11553A-BP3580 has been approved by Industry Canada to operate with the antenna types listed below with the maximum permissible gain and required antenna impedance for each antenna type indicated. Antenna types not included in this list, having a gain greater than the maximum gain indicated for that type, are strictly prohibited for use with this device.

Cet émetteur radio IC: 11553A-BP3580 a été approuvé par Industrie Canada pour fonctionner avec les types d'antennes énumérés ci-dessous avec le gain maximal admissible et impédance d'antenne requise pour chaque type d'antenne indiqué. Types d'antennes n'est pas inclus dans cette liste, ayant un gain supérieur au gain maximal indiqué pour ce type, sont strictement interdits pour une utilisation avec cet appareil.

Antenna List

No.	Manufacturer	Part No.	Antenna Type	Peak Gain
1	Taoglas	MA600.A.ABC.006	Omni antenna	2.1 dBi for 2.4 GHz

Note: The antenna connector is Reverse SMA type.

Hosted Information

The BP-3580 has received Limited Module Approval (LMA) from FCC and IC. This is because the BP-3580 does not have a built-in +3.3V regulator circuit, this module is only installed at the following host product, isn't installed to the other host products.
(The host product manufacturer: TOMEN ELECTRONICS., Model No: BP359C, includes transfer board BP3591 and BP359D, detailed installation please refer to this document page 10.)

When module installed on other host equipment, then it must be re-evaluated via asking FCC or TCB, such that full compliance of the end product is always ensured.

Please note that the module must state that the module is only approved for use when installed in devices as stated in the filing under FCCID: 2ABA3-BP3580 and IC: 11553A-BP3580.

Information for the OEMs and Integrators

The connection to the antenna is made through a host's printed board micro-strip trace layout to an external connector, layout should comply with the following restrictions:

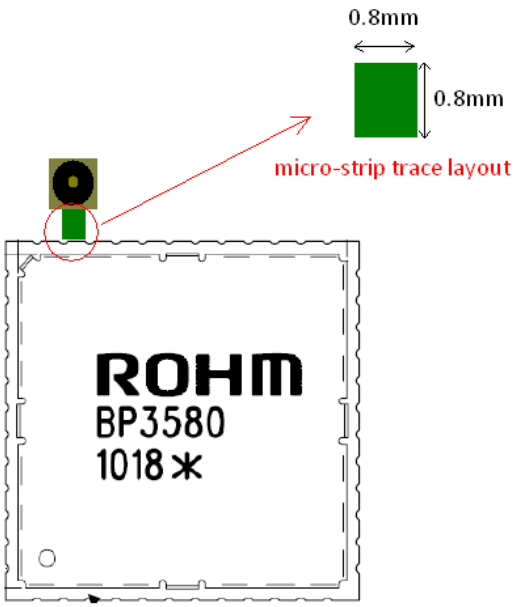

Note:
1. The RF Signal must layout in top layer, others signal layer must blanking, avoid other signals coupled to the RF.
2. The Ground must layout in Bottom layer.
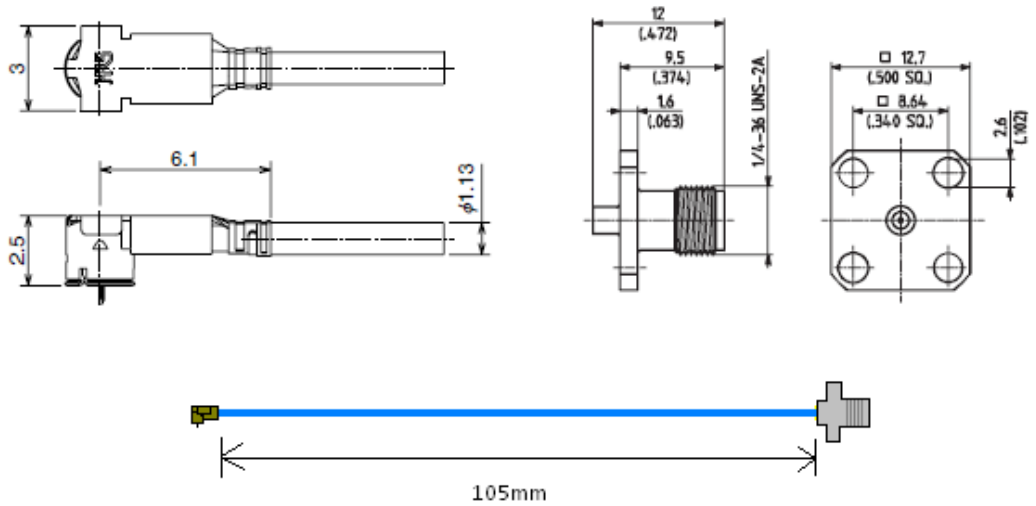
Between the antenna and an external connector must be connected via transfer cable, please refer to the following specifications, transfer cable must be the same specification, and the impedance of 50 ohms to be confirm.