Android Tablet

WF1733T

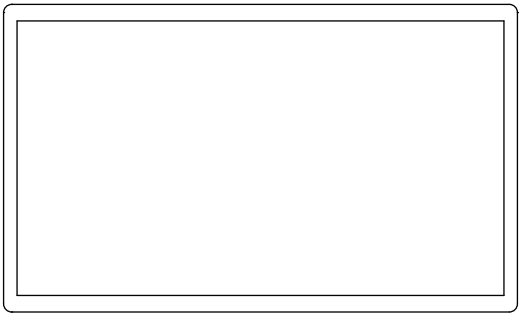

14" 15.6" 17.3" 18.5" 21.5" 24" 27" 32" 43" 55"

User Manual

Index

Important Notices.....2

Package Contents.....3

Features 4

14" Exterior Components.....5

15.6" Exterior Components.....6

17.3" Exterior Components.....7

18.5" Exterior Components.....8

21.5" Exterior Components.....9

24" Exterior Components.....10

27" Exterior Components.....11

32" Exterior Components.....12

43" Exterior Components.....13

55" Exterior Components.....14

Installation Instructions.....15

Important Notices

Copyright Information
All intellectual property rights in this publication are owned by and protected by applicable copyright laws and international treaty provisions. retains all rights not expressly granted. No part of this publication may be reproduced in any form whatsoever or used to make any derivative work without prior written approval by .
Reserves the right to revise this publication, and/or make improvements or changes in the product(s) and/or the program(s) described in this documentation at any time without prior notice. The information in this document is provided in good faith, but without any representation or warranty whatsoever, whether it is accurate,or complete or otherwise, and on express understanding that shall have no liability whatsoever to other parties in any way arising from or relating to the information or its use.
All other trademarks are the property of their respective owners. Other company and brand products and service names are trademarks or registered trademarks of their respective holders.

1)Do not push objects into holes and ventilation slots.
Do not expose this product to moisture or place any objects fil ed with liquids on or near the product.
Do not place a naked flame sou ce, such as lighted candles, on or near this product.
Do not store or operate the device in environments where the temperature is above 50 degrees celsius or below -10 degrees celsius.
Do not intentionally hit the device or place heavy or sharp objects on the device.
Only use accessories specified by the manu acturer.
Keep the device away from benzene, diluents, and other chemicals.
Do not attempt to repair this product yourself. Always use a qualified se vice agent to perform adjustments or repairs.
This product is a desktop product, people will not just use it in their hands.

Package Contents

Please make sure all of the following are present when you unpack your INTERACTIVE DIGITAL SIGNAGE.

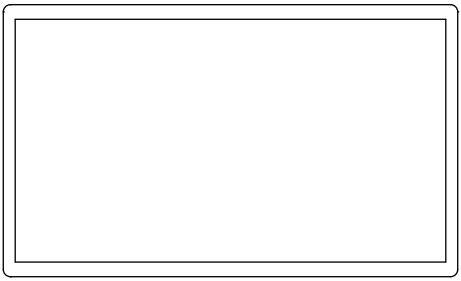

INTERACTIVE DIGITAL SIGNAGE

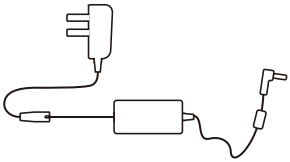

Power adapter

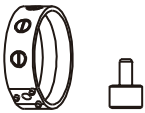

14" 18.5" 21.5" 24" 27"Stand

15.6" 17.3"Stand

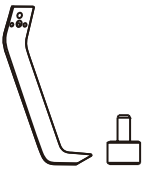

32"Stand

User manual

Features

- Quad core cortex A17,1.8G,RK3288
  Dual core cortex A72+Quad core A53,1.8G,RK3399
- LCD full HD panel
- Resolution:1920*1080,1366*768(18.5'')
- Android 5.1/Android 8.1(RK3288)
  Android 7.1/Android 9.1(RK3399)
- 10-Point capacitive touch
- RAM 2GB/Internal memory 16GB
- RJ45 ethernet
- WiFi 802.11b/g/n
- Bluetooth 4.0
- 2*2W Speaker(14"/15.6"/17.3")
- 2*3W Speaker(18.5"/21.5"/24"/27"/32")
- 2*5W Speaker(43"/55")
- HDMI output
- USB host/Mini USB OTG
- SD card

14" Exterior Components

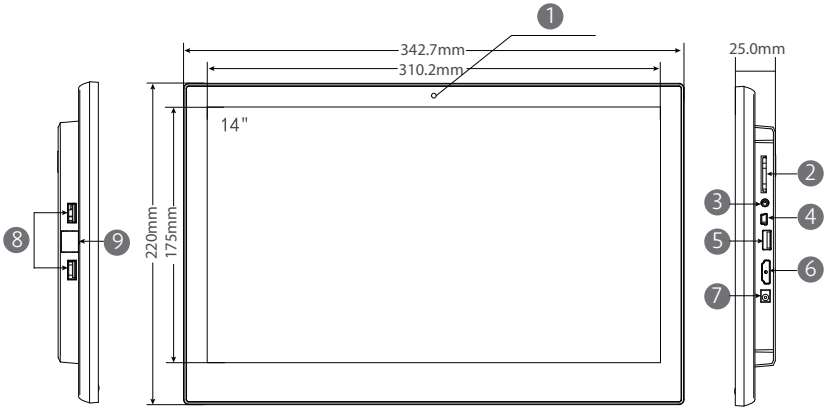

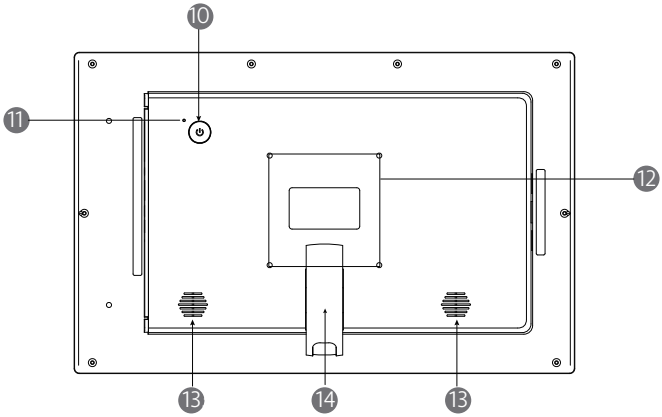

No	Function	No	Function
1	Camera	8	USB host
2	SD card slot	9	Ethernet port
3	3.5mm audio jack	10	Power ON/OFF
4	Mini USB OTG	11	Reset
5	USB host	12	VESA 100*100mm
6	HDMI output	13	Speaker
7	DC in power supply port	14	Stand

15.6" Exterior Components

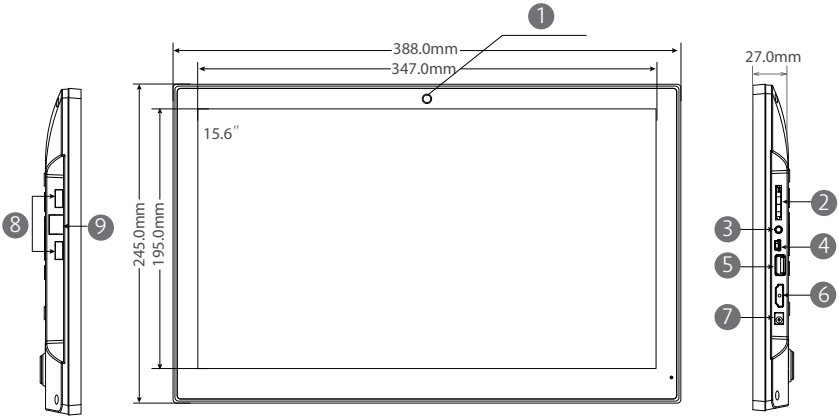

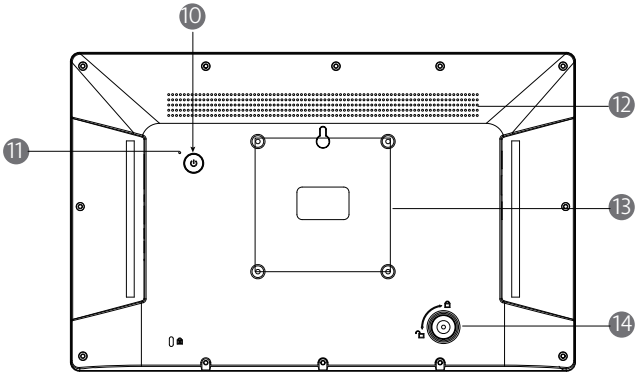

No	Function	No	Function
1	Camera	8	USB host
2	SD card slot	9	Ethernet port
3	3.5mm audio jack	10	Power ON/OFF
4	Mini USB OTG	11	Reset
5	USB host	12	Speaker
6	HDMI output	13	VESA 100*100mm
7	DC in power supply port	14	Stand

17.3" Exterior Components

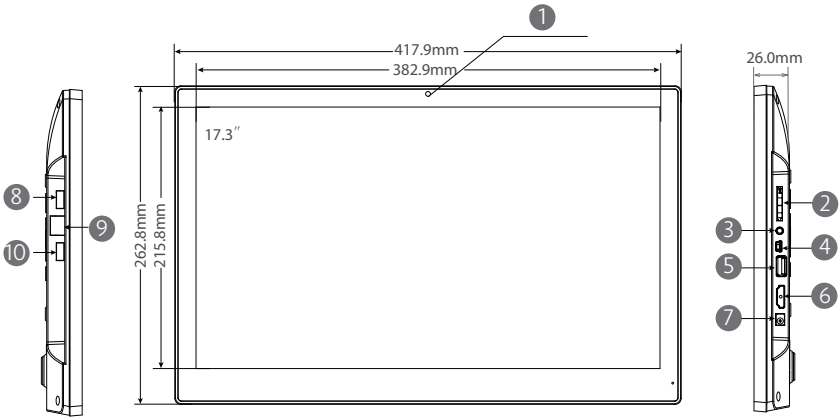

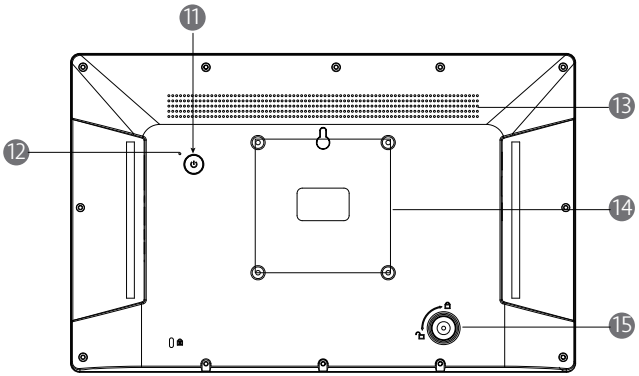

No	Function	No	Function
1	Camera	9	Ethernet port
2	SD card slot	10	Serial port
3	3.5mm audio jack	11	Power ON/OFF
4	Mini USB OTG	12	Reset
5	USB host	13	Speaker
6	HDMI output	14	VESA 100*100mm
7	DC in power supply port	15	Stand
8	USB host		

18.5" Exterior Components

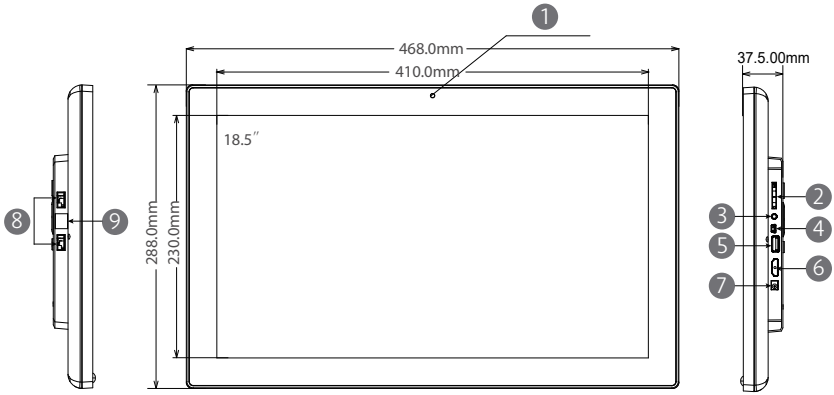

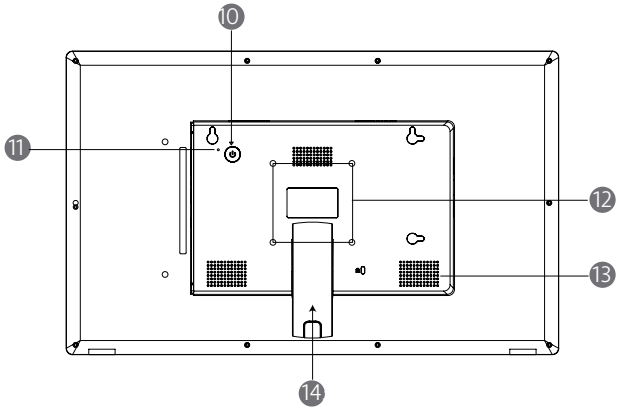

No	Function	No	Function
1	Camera	8	USB host
2	SD card slot	9	Ethernet port
3	3.5mm audio jack	10	Power ON/OFF
4	Mini USB OTG	11	Reset
5	USB host	12	VESA 75*75mm
6	HDMI output	13	Speaker
7	DC in power supply port	14	Stand

21.5" Exterior Components

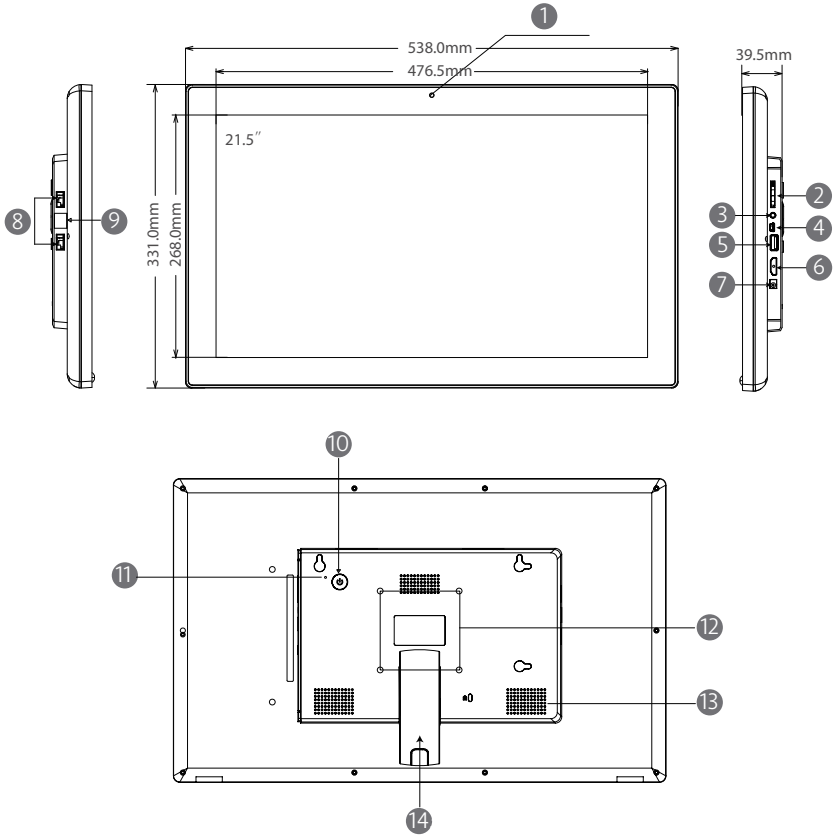

No	Function	No	Function
1	Camera	8	USB host
2	SD card slot	9	Ethernet port
3	3.5mm audio jack	10	Power ON/OFF
4	Mini USB OTG	11	Reset
5	USB host	12	VESA 100*100mm
6	HDMI output	13	Speaker
7	DC in power supply port	14	Stand

24" Exterior Components

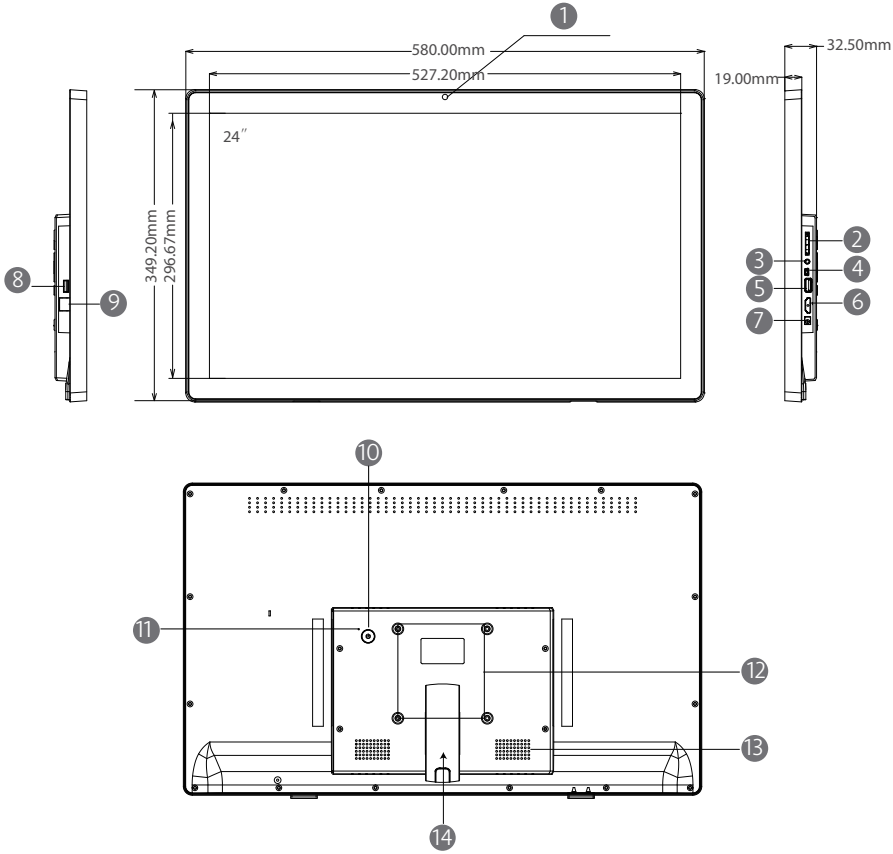

No	Function	No	Function
1	Camera	8	USB host
2	SD card slot	9	Ethernet port
3	3.5mm audio jack	10	Power ON/OFF
4	Mini USB OTG	11	Reset
5	USB host	12	VESA 100*100mm
6	HDMI output	13	Speaker
7	DC in power supply port	14	Stand

27" Exterior Components

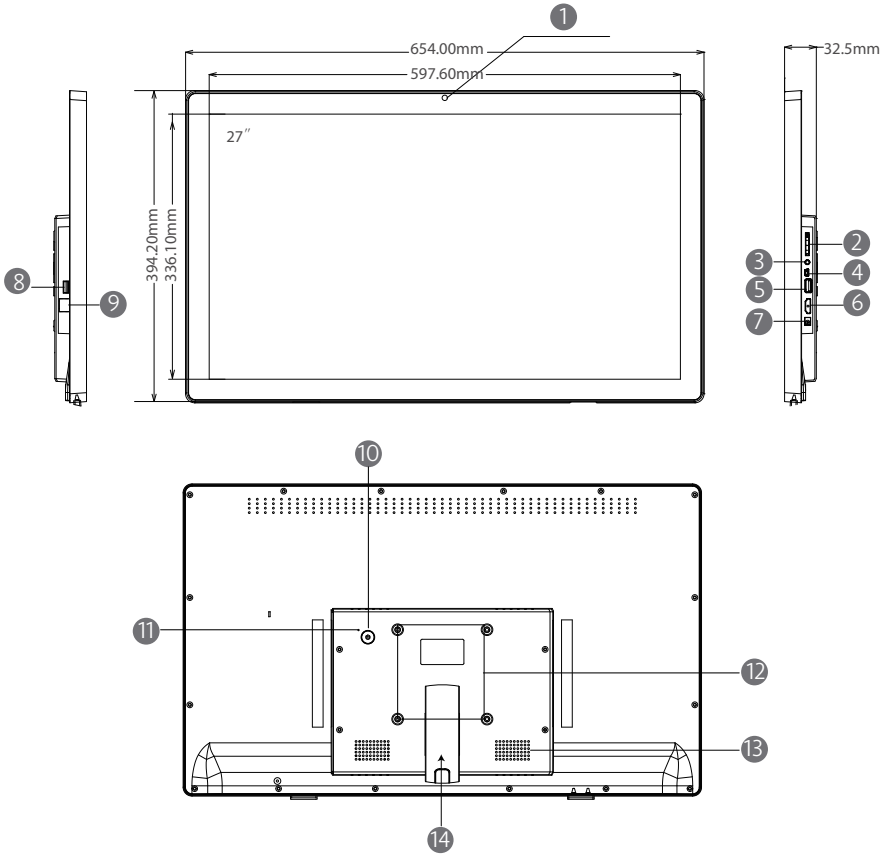

No	Function	No	Function
1	Camera	8	USB host
2	SD card slot	9	Ethernet port
3	3.5mm audio jack	10	Power ON/OFF
4	Mini USB OTG	11	Reset
5	USB host	12	VESA 100*100mm
6	HDMI output	13	Speaker
7	DC in power supply port	14	Stand

32" Exterior Components

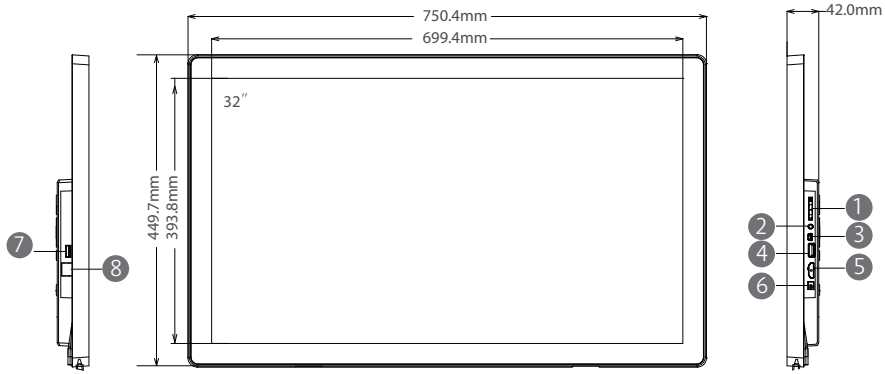

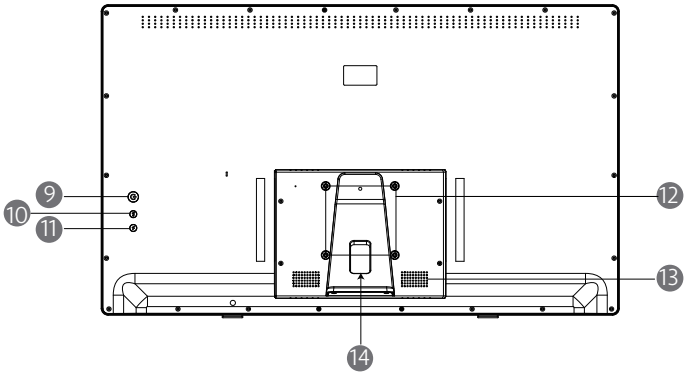

No	Function	No	Function
1	SD card slot	8	Ethernet port
2	3.5mm audio jack	9	Power ON/OFF
3	Mini USB OTG	10	Vol+
4	USB host	11	Vol -
5	HDMI output	12	VESA 100*100mm
6	DC in power supply port	13	Speaker
7	USB host	14	Stand

43" Exterior Components

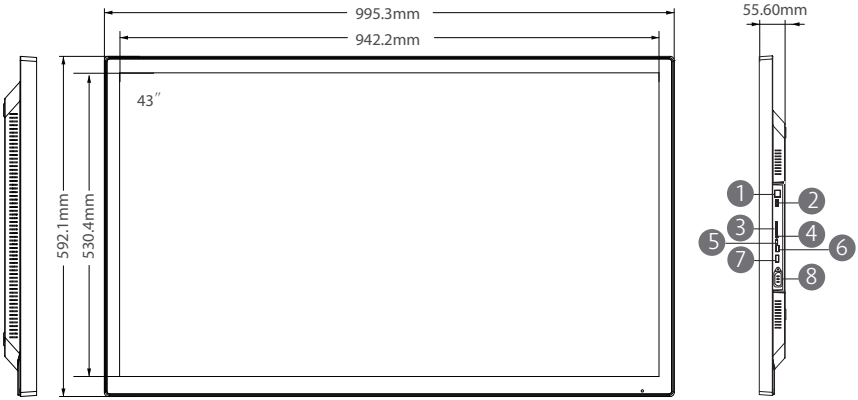

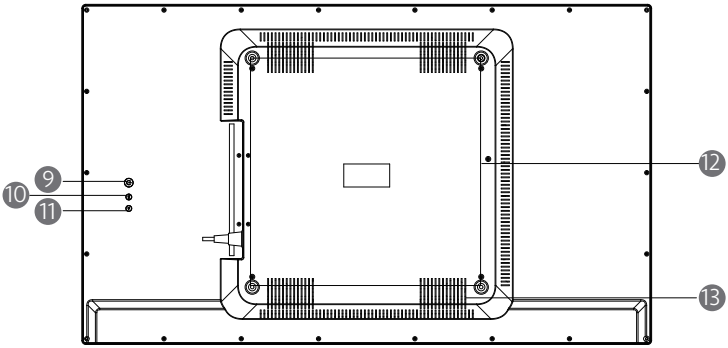

No	Function	No	Function
1	Ethernet port	8	AC in power supply port
2	USB host	9	Power ON/OFF
3	SD card slot	10	Vol+
4	3.5mm audio jack	11	Vol -
5	Mini USB OTG	12	VESA 400*400mm
6	USB host	13	Speaker
7	HDMI output		

55" Exterior Components

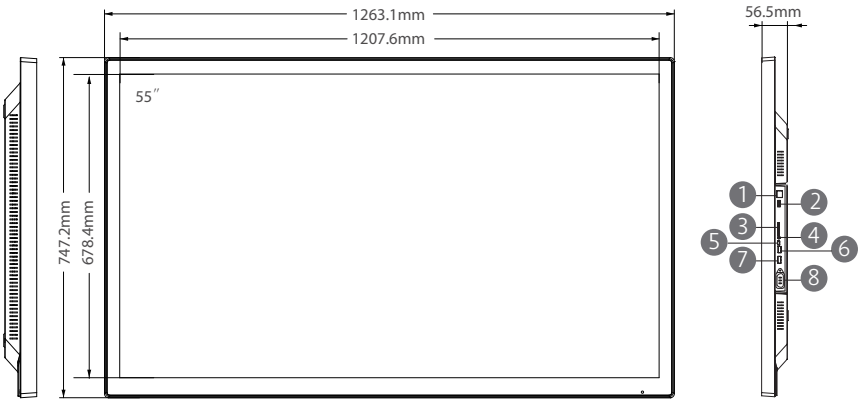

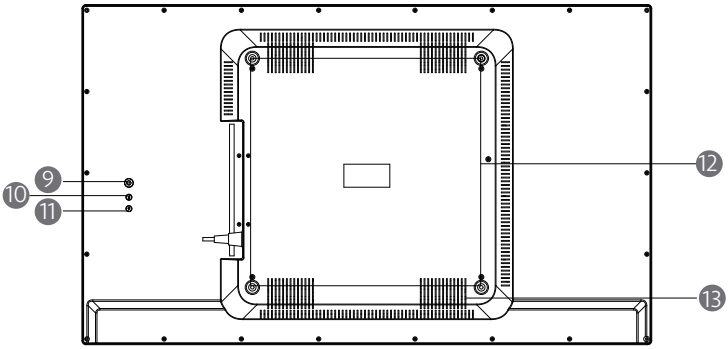

No	Function	No	Function
1	Ethernet port	8	AC in power supply port
2	USB host	9	Power ON/OFF
3	SD card slot	10	Vol+
4	3.5mm audio jack	11	Vol -
5	Mini USB OTG	12	VESA 400*400mm
6	USB host	13	Speaker
7	HDMI output		

Installation Instructions

1

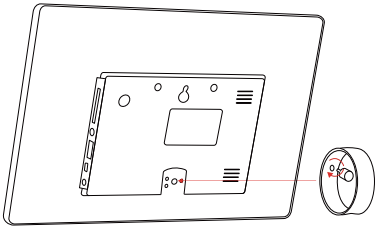

(14"/18.5"/21.5"/24"/27")

2

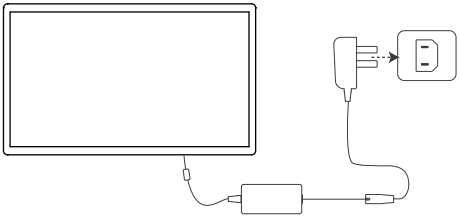

1

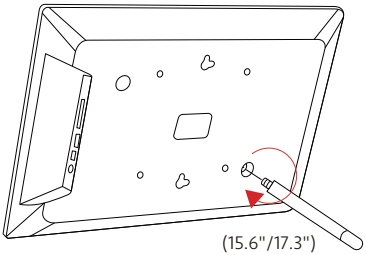

(15.6"/17.3")

2

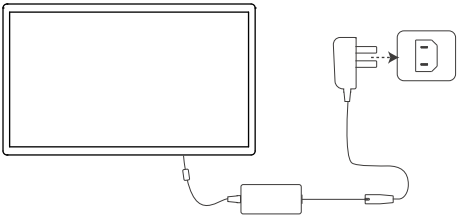

1

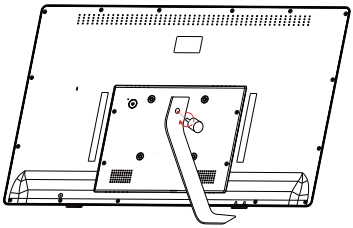

(32")

2

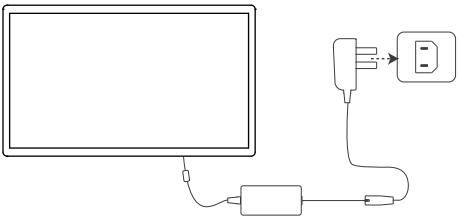

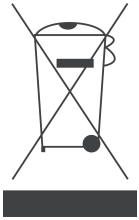

This symbol on the product or in the instructions means that your electrical and electronic equipment should be disposed of at the end of its life separately from your household waste. There are separate collection systems for recycling in your country. For more information, please contact the local authority or your retailer where you purchased the product.

FCC STATEMENT :
This device complies with Part 15 of the FCC Rules. Operation is subject to the following two conditions: (1)This device may not cause harmful interference, and (2)This device must accept any interference received, including interference that may cause undesired operation. Warning: Changes or modifications not expressly approved by the party responsible for compliance could void the user's authority to operate the equipment.

NOTE: This equipment has been tested and found to comply with the limits for a Class B digital device, pursuant to Part 15 of the FCC Rules. These limits are designed to provide reasonable protection against harmful interference in a residential installation. This equipment generates uses and can radiate radio frequency energy and, if not installed and used in accordance with the instructions, may cause harmful interference to radio communications. However, there is no guarantee that interference will not occur in a particular installation. If this equipment does cause harmful interference to radio or television reception, which can be determined by turning the equipment off and on, the user is encouraged to try to correct the interference by one or more of the following measures:

Reorient or relocate the receiving antenna.

Increase the separation between the equipment and receiver.

Connect the equipment into an outlet on a circuit different from that to which the receiver is connected.

Consult the dealer or an experienced radio/TV technician for help.

FCC Radiation Exposure Statement:
This equipment complies with FCC radiation exposure limits set forth for an uncontrolled environment. This equipment should be installed and operated with minimum distance 20cm between the radiator & your body.