HoverCam

Pilot X

Digital Teaching Station

User's Manual

© Copyright HoverCam®

In a Hurry?

Watch the **Pilot X Quick Start Video**
Go to **www.hovercam.com/support/training-videos**

or

Scan this QR code with your phone's camera:

Pilot X Quick Start Video

Table of Contents

Welcome		**3**
Main Features	What's In the Box	
Diagrams		**4**
Assembling the Podium		**6**
Adjusting the Podium		**8**
Charging		**9**
Charging the Podium	Charging the Tablet	
Operating the Tablet		**11**
Touchscreen	Active Stylus	
Internal PC	Windows 10	
Imaging	Thumb Strap	
Pop-Out Keyboard	Third Party Accessories	
Document Camera		**17**
Deploying and Positioning	Software	
HoverCast Wireless HDMI		**19**
About	Setting Up	
Positioning	Troubleshooting	
Wired HDMI		**26**
Audio		**27**
Audio-In	Audio-Out	
Specifications		**30**
Service and Support		**31**
Warranty		**32**
Safety Warnings		**34**
Notices		**37**
Legal		**38**

© Copyright HoverCam® 2019

Welcome

Congratulations! With Pilot X, you’ve taken a major step in revolutionizing your classroom. Designed by educational technology professionals in California, the Pilot X brings every essential educational technology component to your fingertips: a tablet computer, document camera, and wireless podium. Say goodbye to messy cables, because with Pilot X, you can wirelessly control your classroom display from anywhere in the room.

Main Features

- Microsoft® Windows® 10 tablet computer (license not included), powered by Intel®
- 13.3” Multitouch display, with #2 pencil stylus capability
- Wireless, lag-free HD casting via HoverCast
- Wirelessly control and cast bi-directional annotations from USB-touch enabled displays
- Fold-out 4K document camera
- Mobile podium charging station for up to 6 hours of wireless use
- Tablet dock with built-in keyboard
- Lockable tablet bay for overnight security and charging
- Design, present lessons and manage student success with included ClassFusion software

What’s in the Box

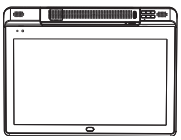
Tablet Computer

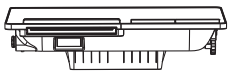
Podium Surface

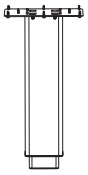
Podium Pedestal

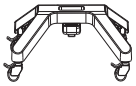
Podium Wheel Base

HoverCast Receiver

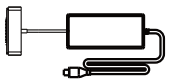
Podium Power Adapter - 10ft.

Tablet Power Adapter - 10ft.

HoverCast Power Adapter - 10ft.

Mini-HDMI to HDMI 2.0 Cable - 5ft.

HDMI Cable - 5ft.

Type A USB 2.0 Cable - 5ft.

Type B USB 2.0 Cable - 5ft.

Magnetic Document Bumpers

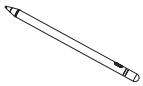
Active Stylus with USB charging cable

Tablet Thumb Strap with 2x 10mm screws

Hardware and Assembly Tools

© Copyright HoverCam® 2019

Podium Diagram

1. Magnetic Tablet Dock
2. Pop-Out Keyboard
3. Tablet Bay Charging Actuator
4. x2 Magnetic Anti-Slip Bumpers
5. Tablet Storage Bay
6. Tablet Bay Combination Lock
7. Podium Audio Line In/Out
8. Charging System On/Off Button
9. Magnetic Power Port
10. Tilt Adjustment Dial
11. 4x Lockable Wheels
12. Height Adjustment Foot Pedal

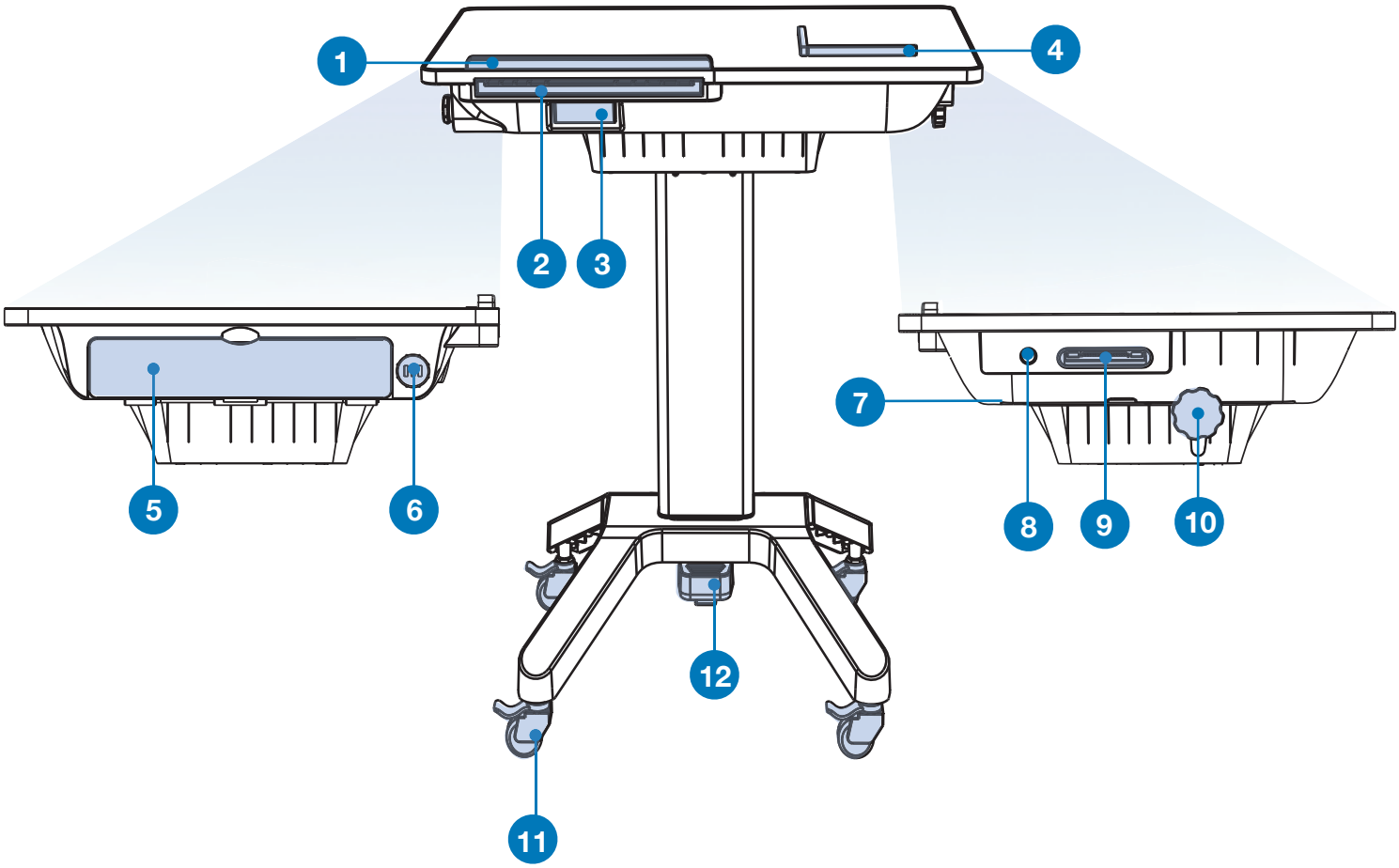

© Copyright HoverCam® 2019

Tablet Diagram

Tablet Features

1. Fold-Out Document Camera
2. HoverCast Wireless Antenna
3. HoverCast Antenna On/Off
4. 1 Watt Tablet Speaker (2x)
5. Tablet Charging Indicator
6. Kensington Lock
7. HoverCast Reset
8. 13.3” Multi-Touch Display
9. Fingerprint Scanner / Menu
10. Tablet Sleep/Wake Button

Camera Controls

11. Zoom-In
12. AutoFocus On
13. Image Flip
14. Zoom-Out
15. Camera Reset
16. AutoFocus Lock
17. Freeze

Connectivity

18. USB 3.0 Type A (2x)
19. USB 3.0 Type C
20. Mini HDMI-Out
21. Audio Line In/Out
22. Magnetic Docking Connector

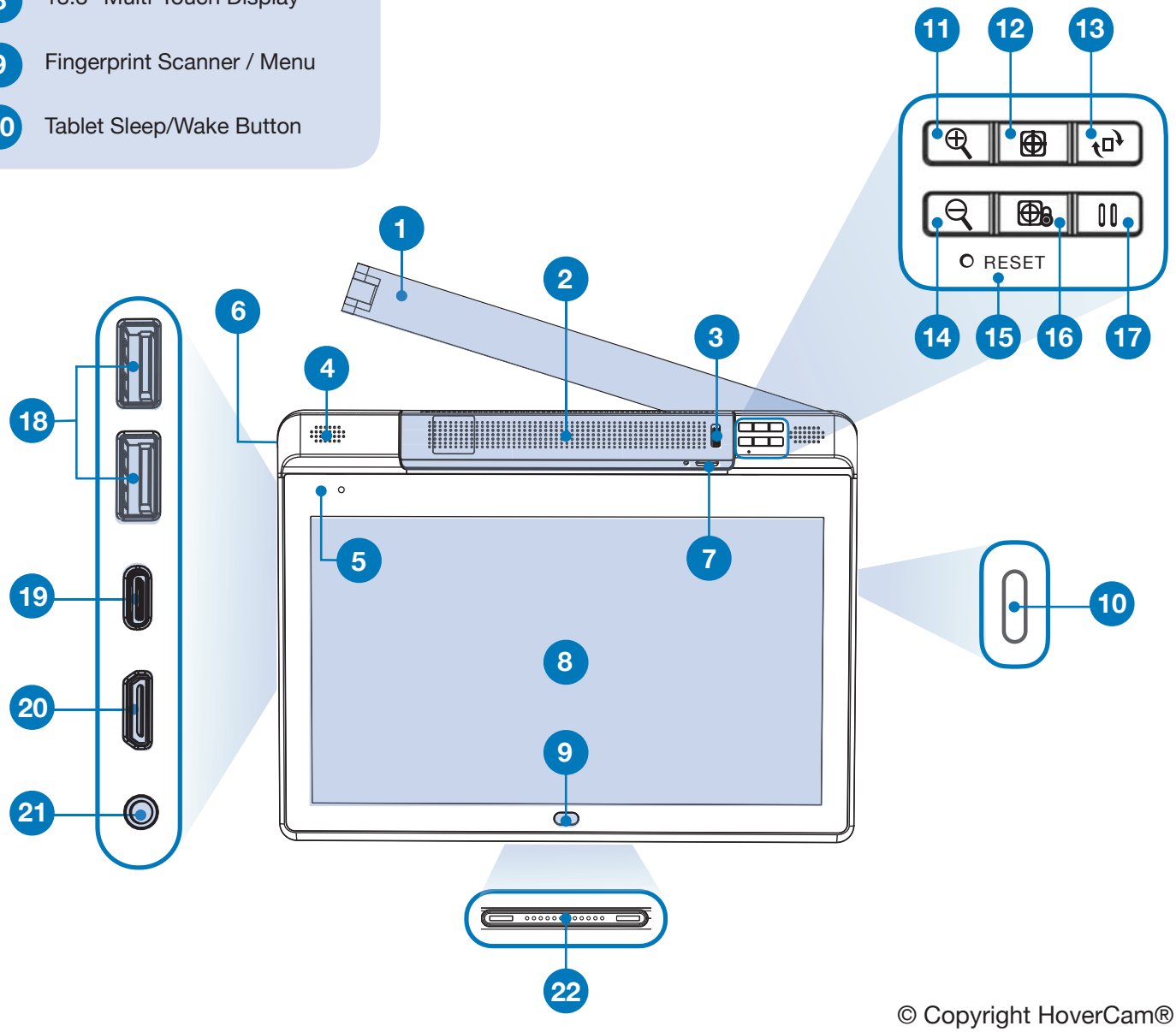

© Copyright HoverCam® 2019

Assembling the Podium

Notice: Two people are required to safely assemble Pilot X

Step 1

Carefully unpack the Pilot X **Podium Surface, Podium Pedestal, Podium Wheel Base**, **Hardware** and **Assembly Tools.** Stage the components on the included foam packaging, or use a padded surface.

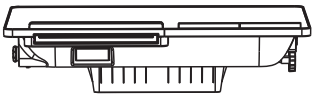

Podium Surface

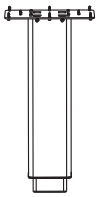

Podium Pedestal

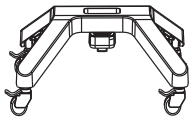

Podium Wheel Base

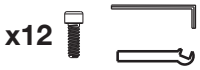

Hardware and Assembly Tools

Step 2

Place the **Podium Surface** upside down on a padded surface, making sure the **Tilt Adjustment Dial** is in the locked position by rotating it clockwise to the furthest position.

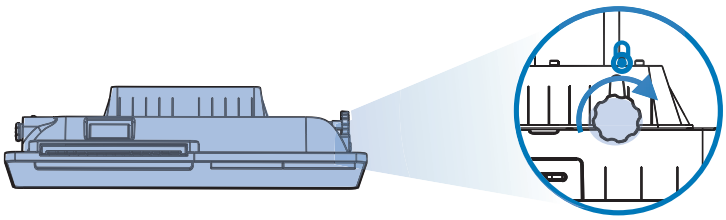

Step 3

Carefully place the **Podium Pedestal** onto the **Podium Surface,** making sure the 8x 4mm bolt holes line up properly. Next use the included **hex driver** to secure **8x 4mm Bolts** as pictured below, being careful not to strip the threads.

Optionally, a thread-locking compound may be used to prevent loosening of the bolts over time (not included). Loctite® Threadlocker Blue 242® is a recommended compound.

8x 4mm Bolts

4mm Hex Driver

Optional Thread-Locking Compound (Not Included)

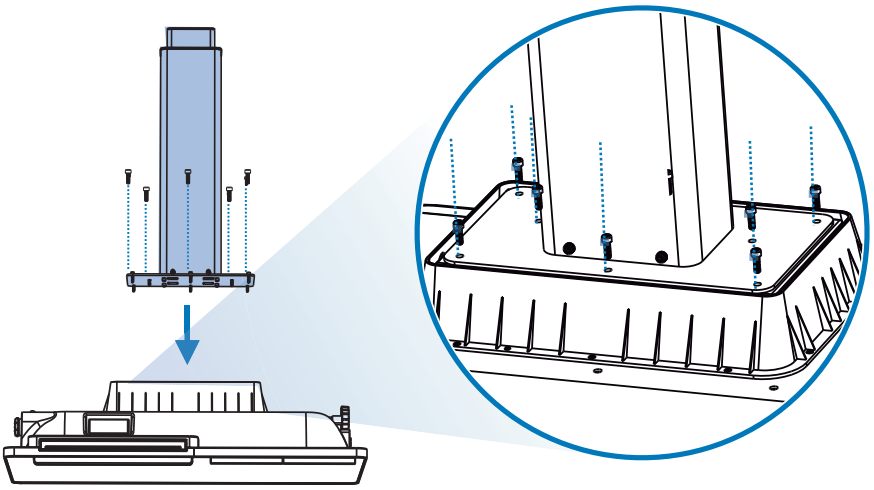

© Copyright HoverCam® 2019

Assembling the Podium

Step 4

Insert the **Podium Wheel Base** onto the **Podium Pedestal,** making sure the **Height Adjustment Foot Pedal** is on the same side as the **Pop-Out Keyboard.** Use the included **Hex Driver** to secure **4x 4mm bolts** as pictured below, being careful not to strip the threads.

Optionally, a thread-locking compound may be used to prevent loosening of the bolts over time (not included). Loctite® Threadlocker Blue 242® is a recommended compound.

4x 4mm Bolts

4mm Hex Driver

Optional Thread-Locking Compound
(Not Included)

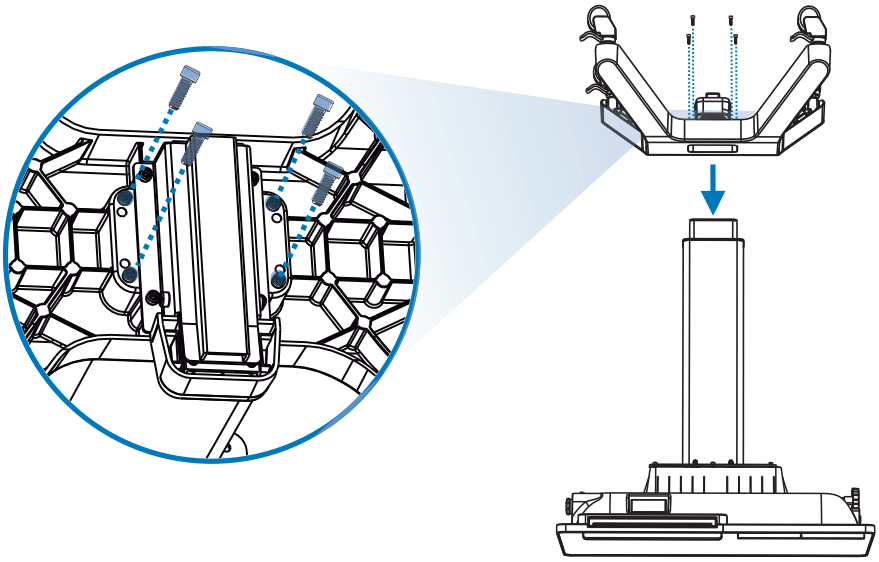

Step 5

Ensure that the 4x **Podium Wheels'** levers are in the locked position by pulling up on the locking levers.

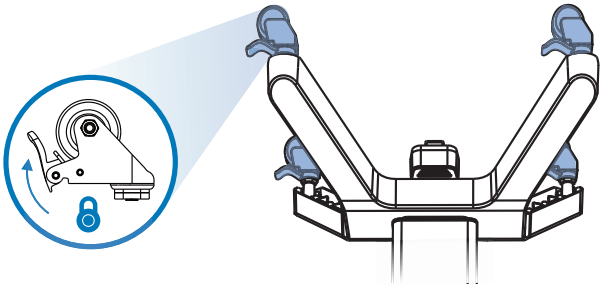

Step 5

With the help of another person, carefully stand the podium onto a level surface.

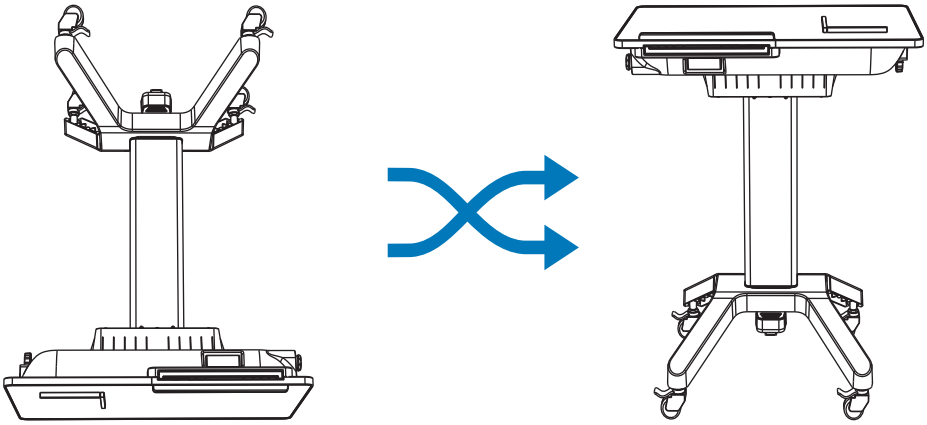

© Copyright HoverCam® 2019

Moving and Adjusting the Podium

The Pilot X Podium is adjustable for a variety of usage models. It can be used as a desk, a presentation lectern, a mobile teaching station, and more.

Moving the Podium

To move the podium, unlock the 4 wheels on the **Podium Wheel Base** by pulling up on the levers with the top of your foot. Use two hands to slowly and carefully push the podium to the desired location, and re-lock the 4 wheels once in position.

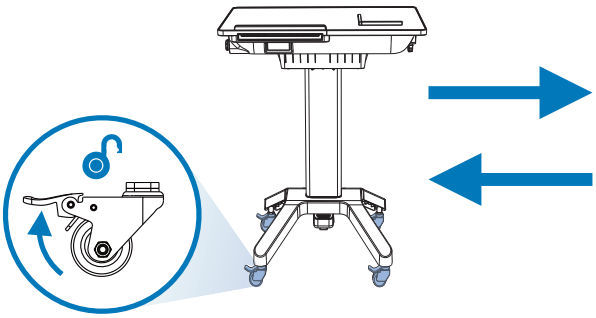

Adjusting Height

The podium uses an internal pneumatic cylinder system to make height adjustments easy. Height can range between 32 - 46 inches. To adjust the height, simply press the **Height Adjustment Foot Pedal** and push down or pull up on the **Podium Surface** with two hands. Release the foot pedal when the desired height is reached.

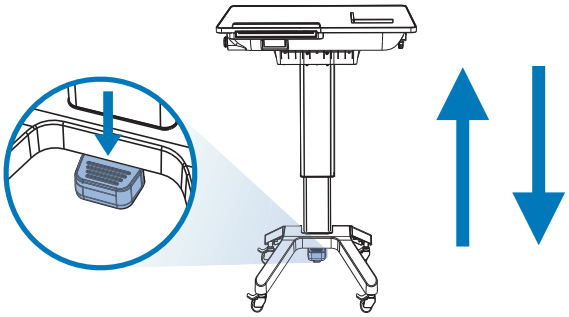

Adjusting Tilt Angle

You can easily adjust the **Podium Surface**'s tilt angle to three settings: 0º (flat), 10º, and 20º. To adjust the tilt, first unlock the **Tilt Adjustment Dial** by turning it counterclockwise. With the wheel unlocked, use two hands to carefully tilt **Podium Surface** to the desired tilt angle. When you are done adjusting the tilt angle, it's important to re-lock the **Tilt Adjustment Dial** by turning it clockwise until the lock engages.

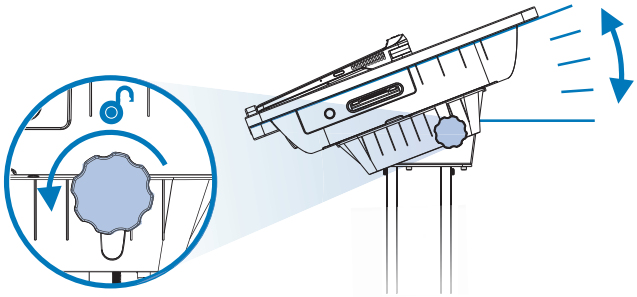

Magnetic Anti-Slip Bumpers

When using the podium in the tilted position, the included **Magnetic Anti-Slip Bumpers** can be used to keep papers and other objects from sliding off the podium. Because the **Podium Surface** is ferromagnetic, the bumpers can affix anywhere on the glass surface.

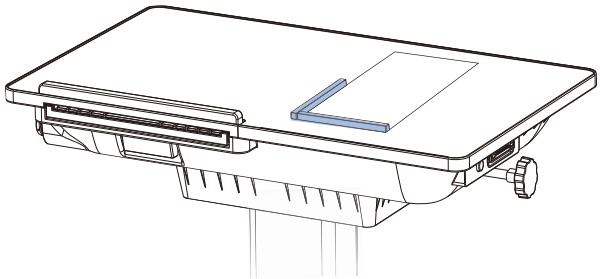

© Copyright HoverCam® 2019

Charging the Podium

The **Pilot X Podium** features an internal battery that can charge the tablet while docked or stored in the tablet bay. This dual-charging feature extends the tablet battery life, allowing for up to six hours of use (depending on the usage model). The podium should be charged overnight for sufficient battery life throughout the day. When used alone, the tablet can achieve up to 3 hours of use under standard operating conditions. To conserve battery life, make sure the document camera is folded away when not in use (Page 17).

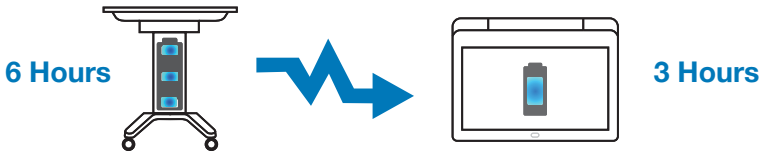

To charge the Podium, plug the **Podium Power Adapter** into an available A/C Power Outlet. Next, connect the the magnetic charging connector to the **Magnetic Power Port** on the right side of the podium. Then press the **Charging System On/Off Button** to switch-on the charging system.

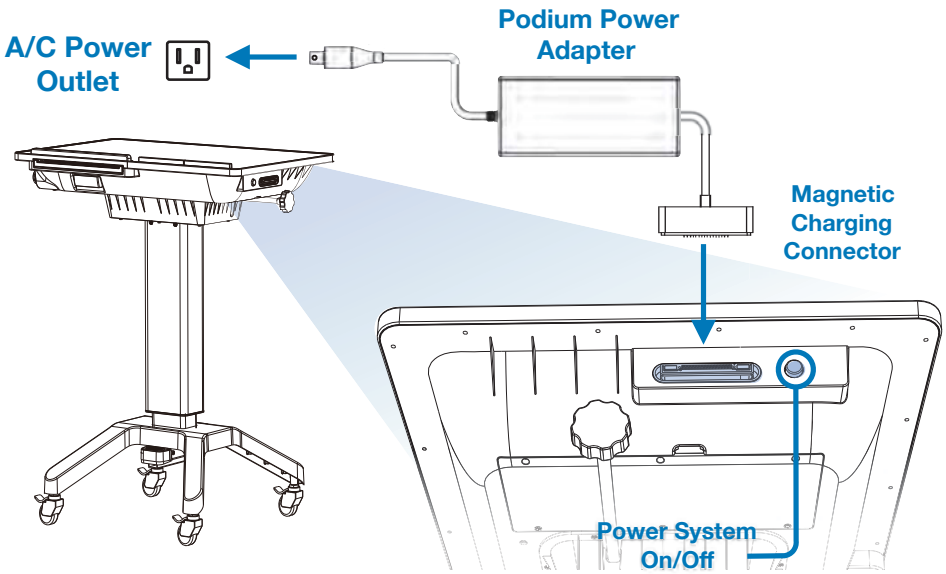

The **Podium Charging Indicator** is located on the upper left corner of the **Podium Surface.** When the podium is receiving a charge, the three blue lights on the “Pilot Internal Battery” charging indicator will flash in succession. If the indicator is not lighting up, check the **Podium Power Adapter** connection and ensure the **Charging System On/Off Button** has been switched on.

When the podium is disconnected from the **Podium Power Adapter**, the **Podium Charging Indicator** will show the current battery level. Three solid blue lights mean that the podium battery is at 75%-100% of its capacity; Two solid blue lights mean that the podium battery is between 50%-74% of its capacity; One solid blue light means that the podium is between 25%-49% of its capacity; One flashing blue light means that the podium is less than 25% of its capacity, and should be charged soon.

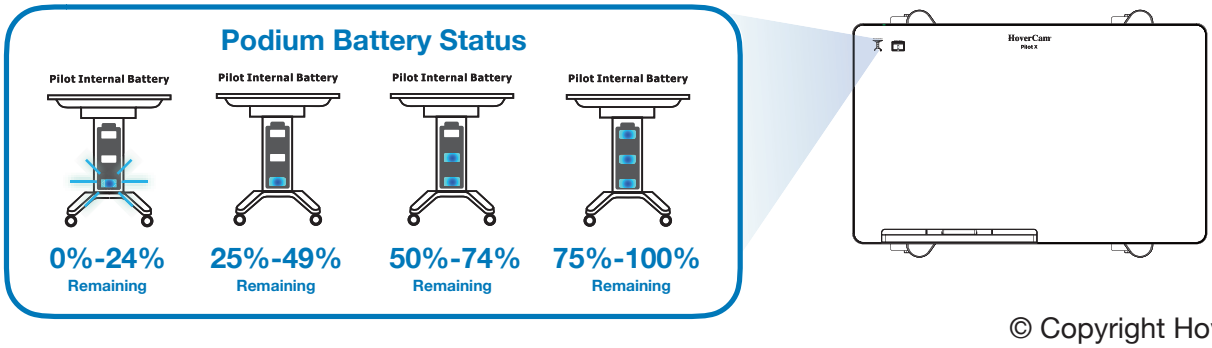

© Copyright HoverCam® 2019

Charging the Tablet

The **Pilot X Tablet** has an internal battery for wireless operation. The tablet can achieve up to 3 hours of standalone use under normal operating conditions. When docked on the podium, the tablet can achieve up to 6 hours of use under normal operating conditions. To conserve battery life, make sure the document camera is folded away when not in use (Page 17).

There are three methods to charge the **Pilot X Tablet:**

1 Charging on the Tablet Dock

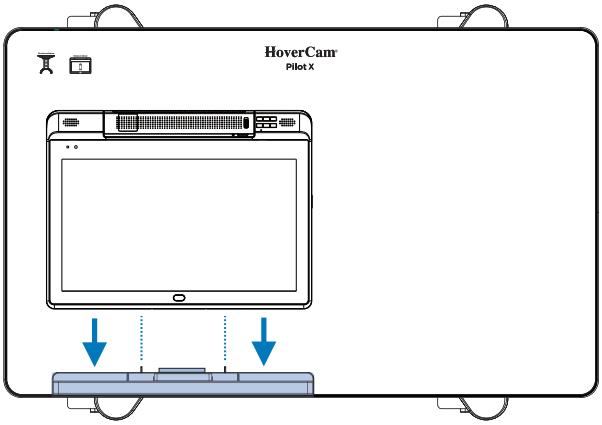

The simplest and most common way to charge the tablet is via the **Magnetic Tablet Dock**, located on the lower left corner of the **Podium Surface.** The dock also connects the tablet to the podium's **Retractable Keyboard** and the **Podium Audio Line In/Out.**

To charge the tablet on the **Magnetic Tablet Dock,** first make sure the podium battery has a charge, otherwise the podium will need to be plugged into an A/C outlet via the **Podium Power Adapter** (page 9). Place the tablet on the podium surface above the tablet dock, being sure to align the **Magnetic Docking Connectors**. With the connectors aligned, simply slide the tablet down along the podium surface until the magnets pull the tablet into position.

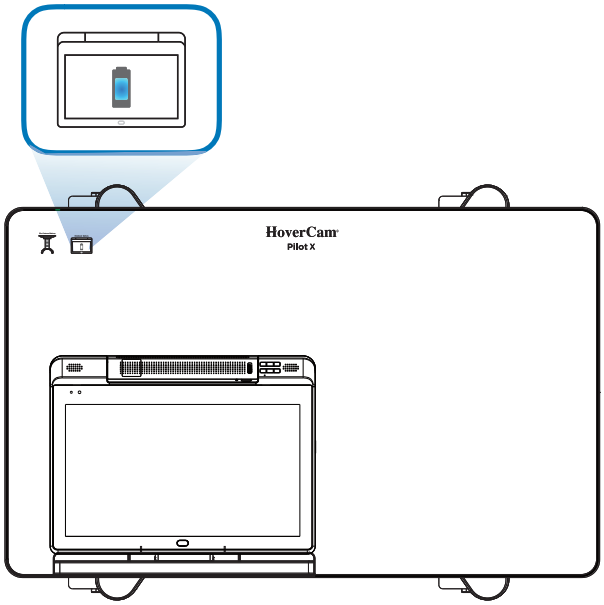

The **Tablet Charging Indicator** is located on the upper left corner of the **Podium Surface** next to the **Podium Charging Indicator**, and will flash when the tablet is receiving a charge. If the indicator is not lighting up, make sure the **Charging System On/Off Button** has been switched on, and the podium battery is charged or receiving a charge via the **Podium Power Adapter.** The tablet's current battery level will not be displayed on the **Tablet Charging Indicator**, and must be checked on the Windows® 10 Taskbar.

There is a secondary **Tablet Charging Indicator** located on the upper left corner of the tablet face**.** When the tablet is receiving a charge, the **Charging Indicator Light** will flash amber. When the tablet has been fully charged, the indicator light will be solid amber.

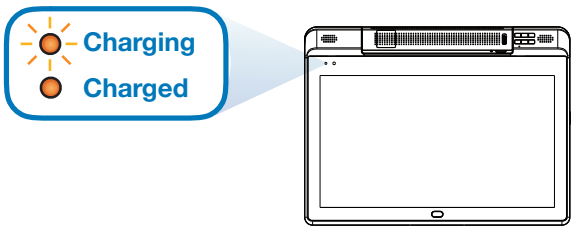

When the tablet is docked and the podium is plugged-in, the podium's dual charging system uses passthrough charging. This means that the tablet's battery will be charged before the podium's battery. Once the tablet is fully charged, the podium's battery will start receiving a charge.

© Copyright HoverCam® 2019

2 Charging in the Tablet Storage Bay

The **Tablet Storage Bay** is a convenient and secure place to store and charge the Pilot X tablet overnight. The bay is located on the left side of the podium, and features a dropdown door that is secured by a 3-digit rotational combination lock.

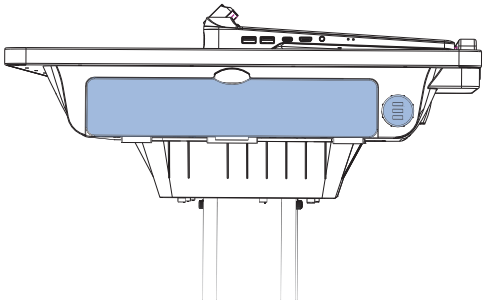

Follow these steps when using the **Tablet Storage Bay**:

1 Unlock the Door

The **Tablet Storage Bay Combination Lock** is located on the left side of the **Podium Surface**, adjacent to the **Tablet Storage Bay.** When the correct 3-digit combination has been entered, the lock wheel will be able to rotate 90º clockwise to disengage the lock, allowing for the door to be opened. From the factory, the default combination code is: 0-0-0.

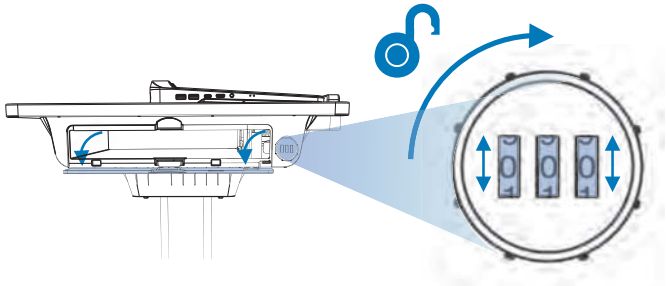

Changing the Combination

To change the combination, first enter the current combination and rotate the wheel to the unlocked position. With the wheel unlocked, stick a small pin into the hole on the underside of the wheel until a click is felt. While keeping the pin inserted, rotate the numbers to make the new combination. When the desired combination is entered, release the pin and confirm the change.

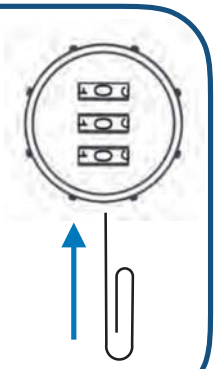

Note: Please keep a record of the combination in a secure location. Forgotten combinations will require replacement of the locking mechanism. For more information, contact HoverCam Support at (866) 201-2056.

2 Insert the tablet

Before inserting the tablet, make sure the **Document Camera** is folded away (Page 17) and the **HoverCast Wireless Antenna** is folded down (Page 20). Orient the tablet so that the **Touchscreen** is facing upwards and the **Magnetic Docking Connector** is directly adjacent to the **Charging Actuator**, then carefully insert the tablet. When the tablet is inserted properly, you will feel the tablet click and lock into position.

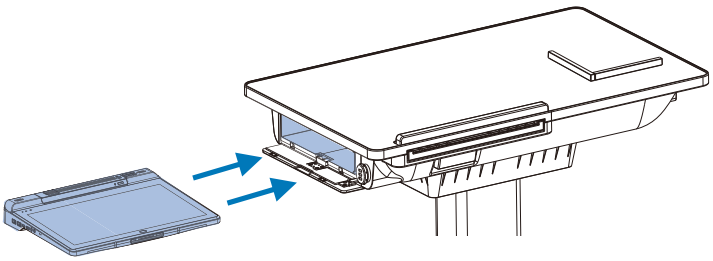

3 Lock the Tablet Storage Bay

With the tablet properly inserted into the **Tablet Storage Bay**, close the bay door and rotate the locking wheel counter-clockwise, making sure to scramble the number combination thereafter.

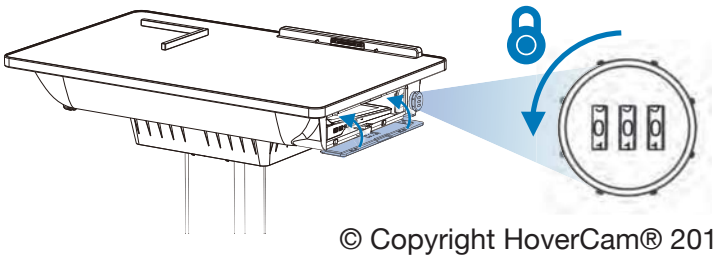

© Copyright HoverCam® 2019

4 Activate Charging

Finally, use the **Tablet Storage Bay Charging Actuator** to enable charging by pushing-in on the lever. The charging actuator is located on the underside of the podium surface, just below the Pullout Keyboard.

The **Tablet Charging Indicator** is located on the upper left corner of the **Podium Surface** next to the **Podium Charging Indicator**, and will flash when the tablet is receiving a charge. If the indicator is not lighting-up, make sure the **Charging System On/Off Button** has been switched on, and the podium battery is charged or receiving a charge via the **Podium Power Adapter.** The tablet's current battery level will not be displayed on the **Tablet Charging Indicator**, and must be checked on the Windows® 10 Taskbar.

When the tablet is docked and the podium is plugged-in, the podium's dual charging system uses passthrough charging. This means that the tablet's battery will be charged before the podium's battery. Once the tablet is fully charged, the podium's battery will start receiving a charge.

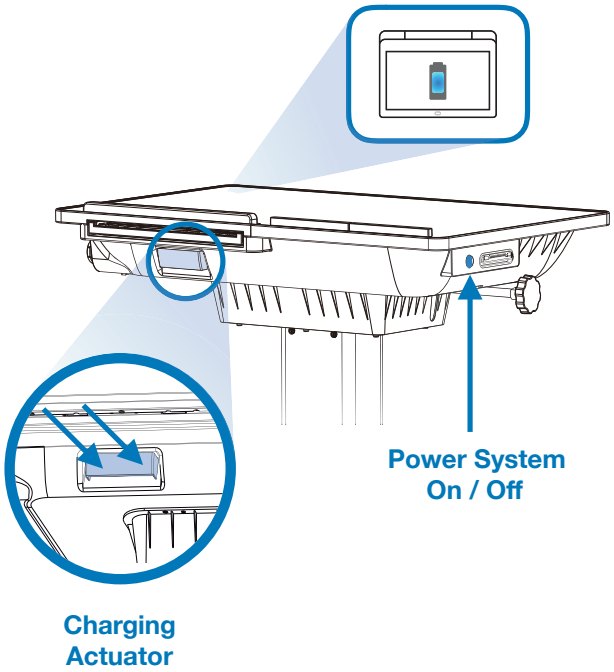

Removing the Tablet

To remove the tablet from the **Tablet Storage Bay**, you must first disengage the **Charging Actuator** by gently pulling outwards on the lever.

Finally, unlock the **Tablet Storage Bay** (see **Step 1**) and remove the tablet by pressing in on the tablet it until it clicks inwards. The tablet will then release and can be gently removed from the **Tablet Storage Bay**.

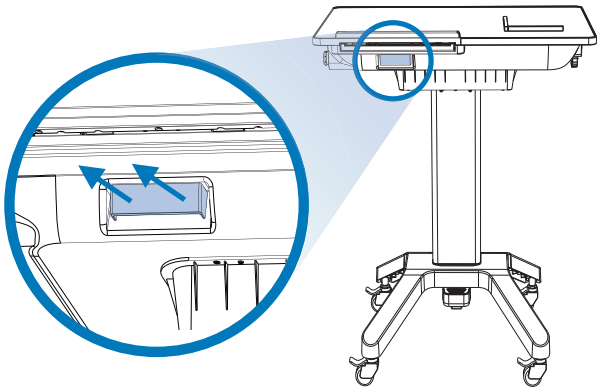

3 Charging with the Tablet Power Adapter

The tablet can also be charged independently of the podium using the included **Tablet Power Adapter.** Simply plug the power adapter into an available A/C wall outlet, and then into the tablet's USB-C port.

When the tablet is receiving a charge, the **Charging Indicator Light** will flash amber. When the tablet has been fully charged, the indicator light will remain solid amber.

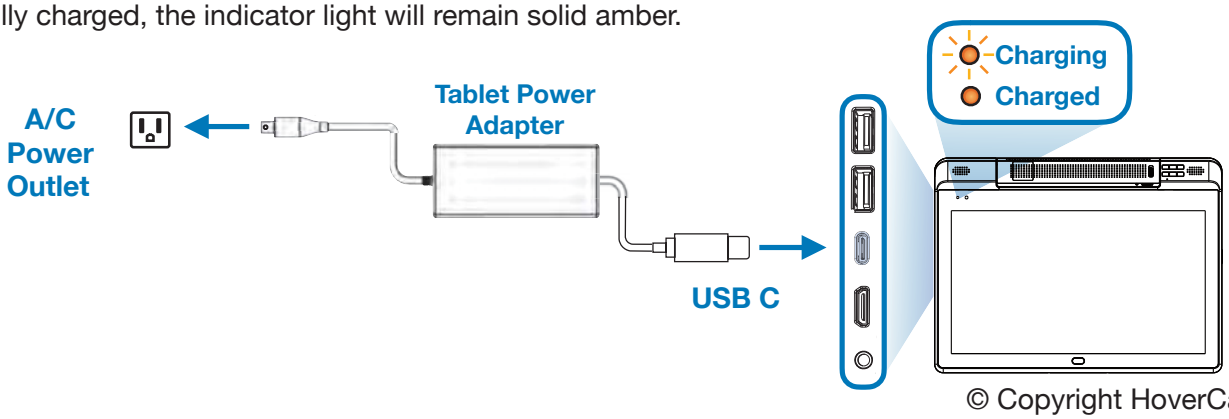

© Copyright HoverCam® 2019

Powering-On

To power-on the Pilot X Tablet, press and hold the **Sleep/Wake Button** for approximately 3 seconds, and the "HoverCam Pilot X" boot-up screen will appear. If the tablet does not power-on, ensure that the battery is charged or receiving a charge.

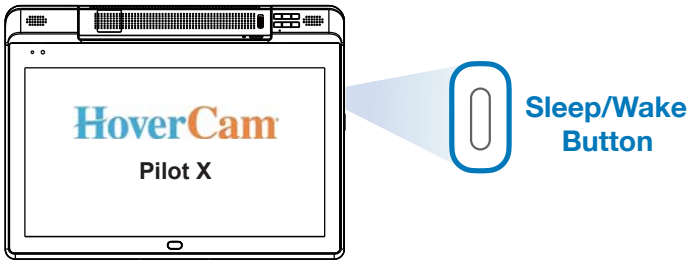

Operating the Touchscreen

The Pilot X tablet is equipped with a 13.3 inch capacitive multitouch screen. The capacitive technology responds to inputs from electrically charged objects, such as fingertips and active styluses, and is not pressure sensitive. **Because of this, avoid pressing too firmly on the touchscreen, as this could cause damage.**

The touchscreen is multitouch-enabled, allowing the user to scroll, zoom, swipe and more by using two or more fingers. For more information about touch gestures, visit the Windows® 10 Support page at www.support.microsoft.com/windows.

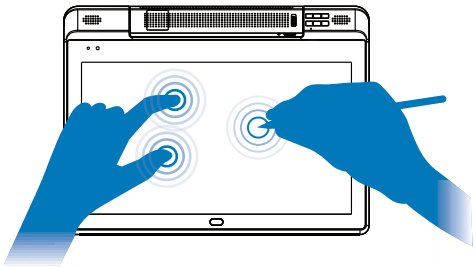

Using the Active Stylus

Pilot X also includes an active stylus. The active stylus must be charged through its rear charging port via the included USB mini cable. Charging the stylus takes approximately 1 hour. The usage time is approximately 8-10 hours. The active technology can be switched on and off via the on/off button shown below:

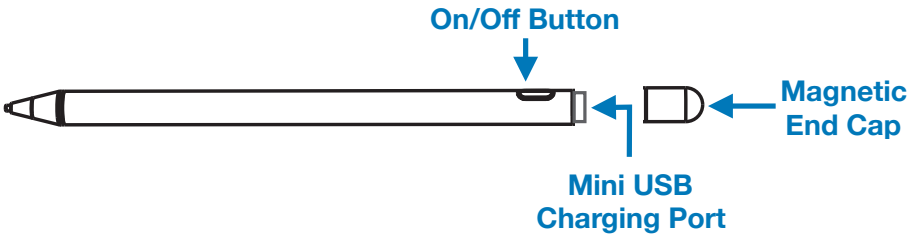

© Copyright HoverCam® 2019

Internal PC

Pilot X comes fully-integrated with an internal PC. No additional computing device is required to operate Pilot X. See the below table for a list of key internal components and their specifications.

PC Specifications

Operating System	Microsoft® Windows® 10 64-bit (license not included)
Processor	Intel® Core™ M3-7Y30
Display Adapter	Intel® HD Graphics 615
Storage	128GB SSD
Memory	8GB DDR RAM
Blueooth	4.0
WiFi	Module Support 802.11B/G/N/AC

Windows® 10

Once powered-on, Pilot X will operate the latest non-licensed version of Windows® 10. Essential functions, settings, operations and commands are comparable to that of a new Windows®-operating desktop including interface and system presets. A Windows® license is not included, so a license key will be needed to unlock Windows® 10's full capabilities. You do not have to activate Windows® 10 for standard operations, but the system will be subject to the following limitations:

- An "Activate Windows®" watermark on the lower right-hand corner of the display.
- Personalization options will be inaccessible (wallpaper, accent colors, lock screen, themes, etc).

For more information on how to use your Windows® 10 operating system, see the full manual at www.support.microsoft.com/windows

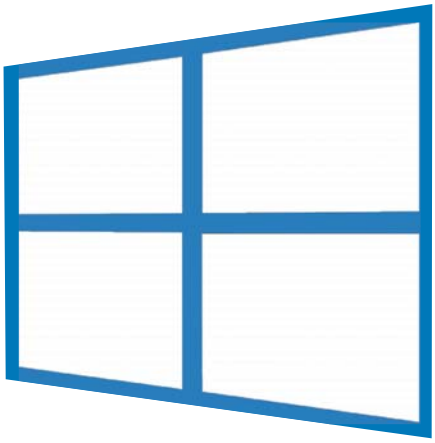

Imaging / Formatting

An ethernet cable can be connected via a dongle (not included) to one of Pilot X's **USB ports** (Type-A or Type-C) to facilitate imaging and wired networking.

Note: When reformatting Pilot X, the reinstallation of specific drivers may be required. For detailed instructions as well as the necessary drivers, please contact HoverCam Technical Support: support@thehovercam.com.

For convenience, the Pilot's required drivers are also preloaded on the included **USB Drive** and can be reinstalled after imaging.

© Copyright HoverCam® 2019

Tablet Mode

For users who want a more touch-friendly experience, Pilot X can be configured to activate tablet mode when removed from the **Magnetic Tablet Dock**. While in tablet mode, apps will open in full screen, the start menu will replace the desktop, icon sizes will increase, etc. Tablet mode can also be manually switched on or off within the action center on the taskbar. For more information on tablet mode, visit the Windows® 10 Support Page at www.support.microsoft.com/windows.

Desktop Mode

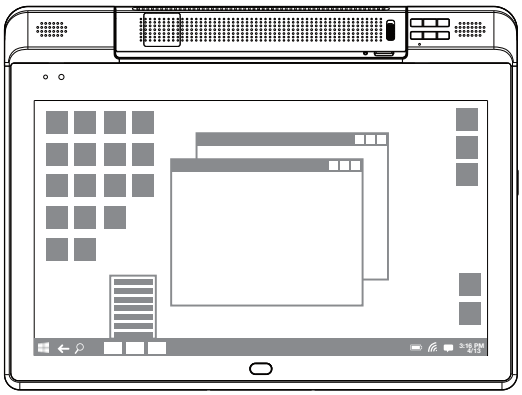

Tablet Mode

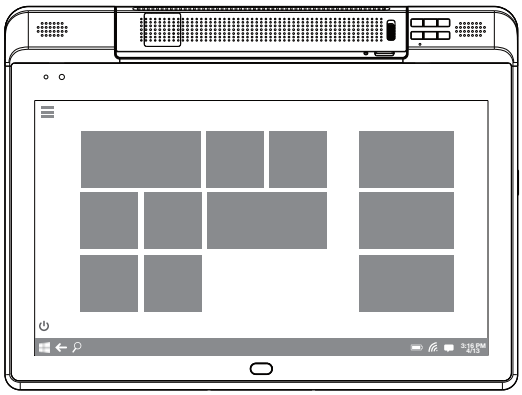

Thumb Strap

For added safety, an optional **Thumb Strap** is included with every Pilot X Tablet. The thumb strap allows the user to maintain a better grip on the tablet while using it independent of the podium.

WARNING: The thumb strap is *not* designed to support the full weight of the Pilot X tablet. Always keep two hands on the tablet, and never carry it by the thumb strap alone. Damages caused by negligent use of the thumb strap will not be covered by the factory warranty.

To install the thumb strap, first remove the adhesive film and position the strap horizontally below the underside lip as pictured below, making sure to align the 2x 10mm screw holes on the back of the tablet casing. Then use a small Phillips screw driver (not included) to secure the 2x included 10mm screws into position.

Thumb Strap Positioning

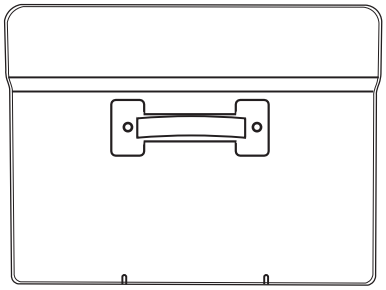

Proper Use of Thumb Strap

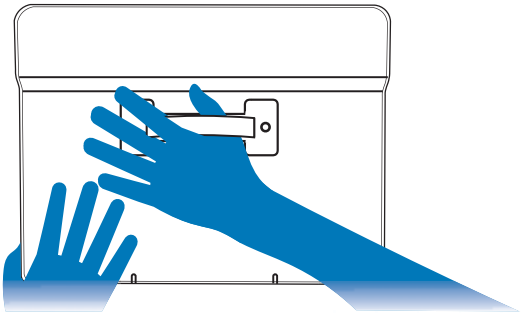

© Copyright HoverCam® 2019