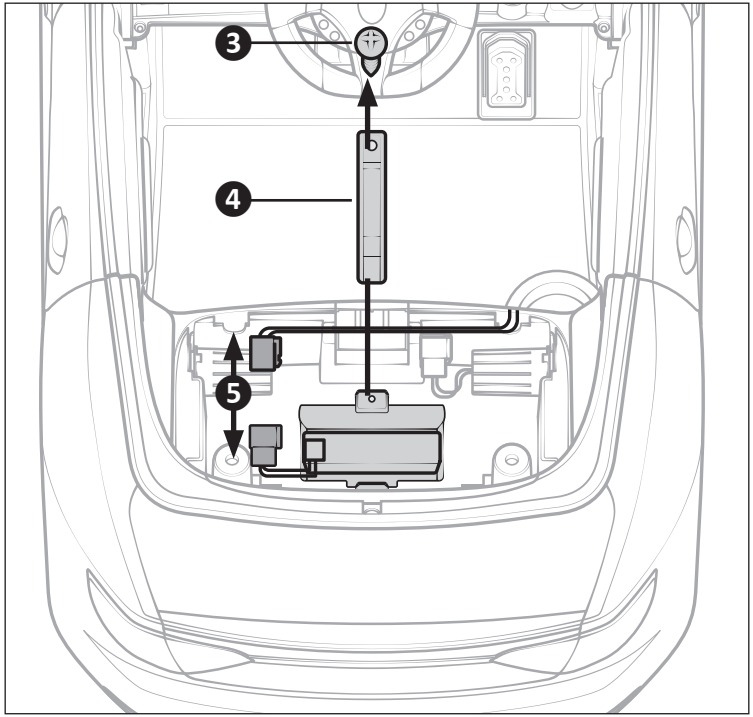
3
4
5

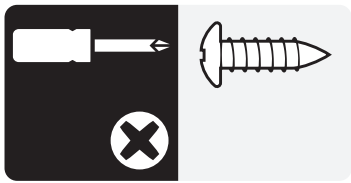

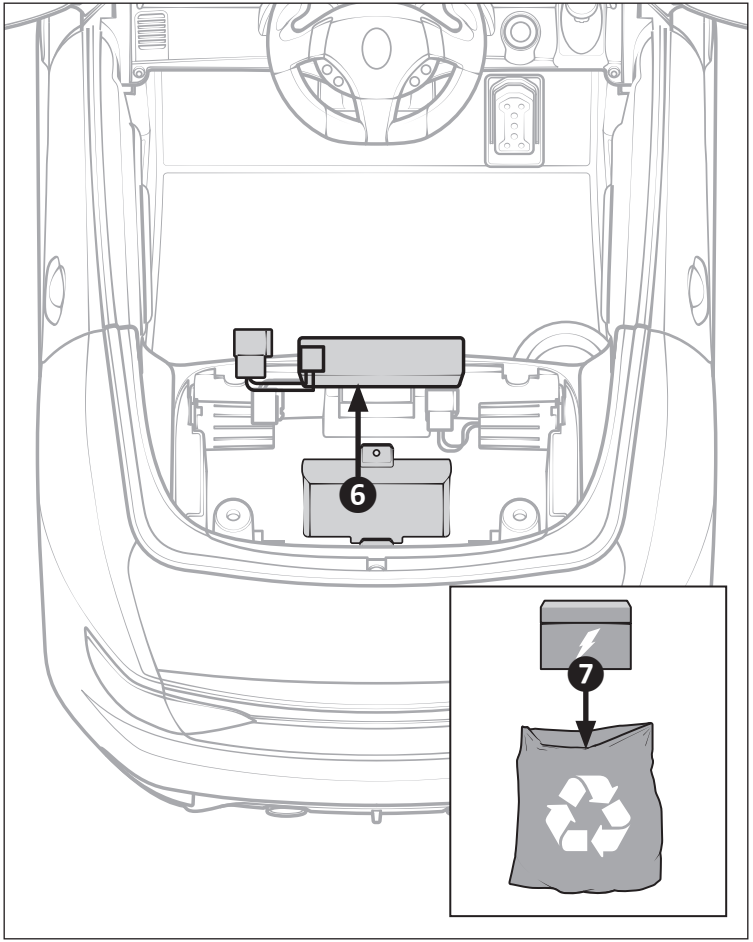
6
7

⑥ Care

The ride-on toy should be checked for damage, missing or badly worn parts before each use.

- Check the tightness of the fasteners before each use.
- Check the tightness of the wheels before each use.
- Ensure the battery is securely in place before each use.

Note

- Store the to ride-on toy indoors or cover it with a tarp to protect it from the wet weather. Keep it away from sources of heat, such as stoves and heaters.
- Do not leave the vehicle in the sun for long periods of time or fading may occur. Store in shade or cover with tarp.
- Do not wash the vehicle with a hose.
- Do not wash the vehicle with soap and water.
- Clean the vehicle with a soft, dry cloth. To restore shine to plastic parts, use a non-wax furniture polish. Do not use car wax, abrasive cleaners or wash the vehicle with soap and water. Water will damage the motor, electrical system and battery.

❼ Service

Do not return this product to the place of purchase. If your ride-on toy needs service, repairs or replacement parts, call:

Pacific Cycle Consumer Relations

Hours: 8:00 am – 5:00 pm (CST) Monday - Friday

Phone: 877-741-6154

Email: customerservice@kidtraxtoys.com

For a complete list of replacement parts, please contact Pacific-Cycle Consumer Relations. To order parts, please have the model and serial number available, which can be found underneath the seat on the battery cover.

ENVIRONMENTALLY RESPONSIVE

This ride-on toy contains a sealed lead acid NON SPILLABLE BATTERY. This battery must be recycled.

FCC Statement

This device complies with part 15 of the FCC Rules. Operation is subject to the following two conditions: (1) This device may not cause harmful interference, and (2) this device must accept any interference received, including interference that may cause undesired operation.

Any changes or modifications to this unit not expressly approved by the party responsible for compliance could void the user's authority to operate the equipment.

NOTE: This equipment has been tested and found to comply with the limits for a Class B digital device, pursuant to part 15 of the FCC Rules. These limits are designed to provide reasonable protection against harmful interference in a residential installation. This equipment generates, uses and can radiate radio frequency energy and, if not installed and used in accordance with the instructions, may cause harmful interference to radio communications.

However, there is no guarantee that interference will not occur in a particular installation. If this equipment does cause harmful interference to radio or television reception, which can be determined by turning the equipment off and on, the user is encouraged to try to correct the interference by one or more of the following measures:

Reorient or relocate the receiving antenna.

- Increase the separation between the equipment and receiver.
- Connect the equipment into an outlet on a circuit different from that to which the receiver is connected.
- Consult the dealer or an experienced radio/TV technician for help.

8 Warranty

One Year Limited Warranty | Six-Month Limited Warranty on Battery

Pacific Cycle, Inc. (PC) warrants this product to the original retail purchaser as follows: The ride-on toy (except for the 12-volt battery) is warranted against defective materials or workmanship for one year from the date of original purchase. The 12-volt battery is warranted against defective materials or workmanship for six months from the date of original purchase. An original receipt is required to validate your warranty. PC will, at its option, provide replacement parts or replace this product. PC reserves the right to substitute if the part or model has been discontinued. To make a claim under this warranty you must contact us at www.kidtraxtoys.com; fax us at 1-800-858-2800, 24 hours a day; write to Kid Trax Consumer Relations Department, Kid Trax Toys, P.O. Box 344 Olney, IL 62450 or call 1-877-741-6154 from 8 a.m. to 5 p.m., Monday through Friday, CST. Proof of purchase is required, and shipping charges are the responsibility of the consumer.

Warranty Limitations

This warranty does not include damages which arise from accident, misuse, abuse, neglect or other causes not arising out of defects in materials or workmanship, nor does it cover damages arising out of service by other than an authorized PC service center. For personal use only. Not for commercial use. The original owner shall pay all labor charges connected with the repair or replacement of all parts. Under no circumstances does this limited warranty include the cost of shipment or transportation to or from an authorized repair center or Kid Trax retailer.

Limitation of Damages:

The warranty and remedies as set forth are exclusive and in lieu of all others, oral or written, expressed or implied. In no event will PC or the dealer selling this product be liable to you for any damages, including incidental or consequential damages, arising out of the use or inability to use this product. Some states do not allow limitations as the exclusion or limitation of incidental or consequential damages, so the above limitations may not apply to you.

Limitations of Warranties and Warranty Terms

Any warranties, including implied warranties of the merchantability and fitness for a particular purpose, shall be limited to the duration and terms of the express written warranty. This warranty gives you specific legal rights, and you may have other rights, which vary from state to state.

Neither PC nor the dealer selling this product authorized any person to create for it any other warranty, obligation or liability in connection with this product.

Pacific Cycle Consumer Relations
Hours: 8:00 am – 5:00 pm (CST) Monday - Friday
Phone: 877-741-6154
Email: customerservice@kidtraxtoys.com

ONE YEAR BUMPER to BUMPER WARRANTY
BATTERIES EXCLUDED - SEE DETAILS

A DIVISION OF DOREL INDUSTRIES

PACIFICCYCLE™

© 2019 Pacific Cycle Inc.

4902 Hammersley Rd.
Madison, WI 53711

Styles and colors may vary. Made in China