# RANGE ROVER

## VELAR

With Adult-controlled remote

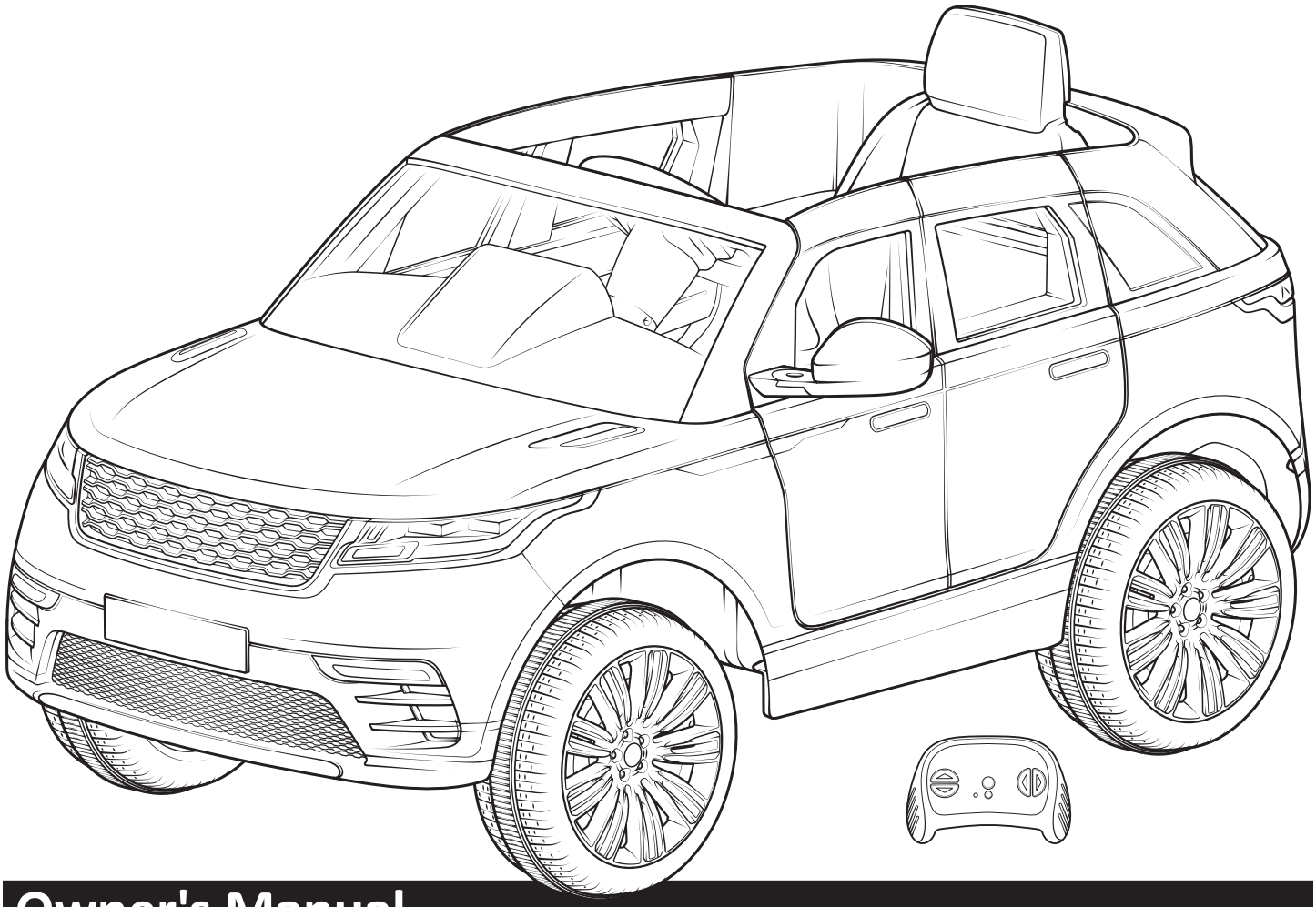

# Owner's Manual

**KT1550I**

Styles and colors may vary. Made in China

## ⚠ WARNING

This manual contains important safety and use information.
Keep this manual for future reference.

- An adult must read this entire manual
- Adult supervision is required at all times

**Age:** 3–5 years
**Weight:** Maximum 77 lbs (35 kg)
**Maximum Speed:** 2.5 MPH
**Battery:** 6 volt

# Safety

## ⚠ WARNING

**FAILURE TO FOLLOW THE SAFETY INSTRUCTIONS LISTED BELOW MAY RESULT IN SERIOUS INJURY OR DEATH**.
The owner's manual contains assembly, use and maintenance instructions.

### Child Safety Warnings

- Adults supervising children must read and understand this entire manual before allowing any child to use this product.
- Adults must evaluate their own children as to maturity, strength, judgment and ability to follow safety rules. Published age guidelines are not a substitute for careful evaluation of your own child.
- Adults must teach children about thinking ahead while riding as this may be the first time a child has ever controlled a motorized ride-on toy. While you supervise, see through the child's eyes, and verbally teach them about steering and avoiding obstacles in the approved riding area.
- Riding a motorized ride-on toy can be a dangerous activity, even under the best of circumstances. Good choices regarding where and when to ride, constant adult supervision of riding, and practice and careful riding by the child can all help to minimize risk. However this ride-on toy is intended to move and therefore it is possible for the rider to lose control, fall off and/or get into dangerous situations that no amount of care, instruction or expertise can eliminate.
- If this inherent risk is not acceptable, adults should not allow children to ride this ride-on toy.

## ⚠ WARNING

### Safe Riding Warnings

- Not be used by children under three (3) years of age or children over five (5) years of age
- Do not exceed the maximum weight capacity of 77 lbs. (35 kg)
- Do not allow more than one (1) rider.
- Do not allow children to operate the remote control. The remote control is for adult use only.

**ADULTS AND SUPERVISORS, PLEASE NOTE:**

1. Always instruct all children of common sense rules and safe practices.
2. Be aware that flat, hard surfaces provide the safest experience for child riders.
3. Do not allow the child rider to operate the ride-on toy near streets, roads, sidewalks, walkways, or any other place where they may encounter other moving vehicles.
4. Never leave children unattended with this ride-on toy. Continuous adult supervision is required.
5. If necessary, adults and supervisors are always responsible for setting up gates and barriers to ensure a safe riding environment for the child rider.
6. Be aware that this ride-on toy does not have braking capabilities. Allowing use of this ride-on toy in areas that require braking may cause rolls, crashes, serious injury, or death to the child rider.
7. Teach children not to allow other children to use this ride-on toy. Communicate this message to other adults and supervisors of fellow children with which your child interacts.
8. Sternly alert children that hands, legs, hair, and clothing can potentially get caught in moving parts. Ensure they never place a body part or piece of clothing near a moving part of the ride-on toy. Avoid loose clothing.
9. Instruct children to always wear shoes when using the ride-on toy.
10. Confirm that children do not have access to the charging equipment or come into contact with any part of the ride-on toy while it is charging.
11. Do not mix old and new batteries.
12. Do not mix alkaline, standard (carbon zinc), or rechargeable batteries.
13. Firmly instruct children to use the ride-on toy in a safe manner. Unsafe behaviors include, but are not limited to:
    - Traveling at unsafe speeds
    - Not riding in the seated position
    - Riding at night or in any conditions of low visibility
    - Riding in any wet conditions including rain, snow, and ice
    - Any kind of stunt riding: jumps, ramps, stairs, hills, sloped surfaces, or other actions involving any notable risk
    - Any kind of off-road riding: rough terrain, dirt, mud, gravel, or any others that involve notable risk
    - Riding near any pool or open body of water
    - Pushing, pulling, or shoving the driver in any way while operating the ride-on toy
    - Using the ride-on toy without the battery cover or any other safety cover fully closed
    - Pulling or hitching the ride-on toy with other similar moving ride-on toys or products

## ⚠ WARNING

### Battery and Charging Warnings

**The following safety hazards may result in serious injury or death to the user of the ride-on:**

- Do not mix old and new batteries.
- Do not mix alkaline, standard (carbon-zinc), or rechargeable (nickel-cadmium batteries.

**Corrosive Material Warnings**

- Battery posts, terminals and related accessories contain lead and lead compounds (acids) chemicals and are toxic and corrosive. Never open the battery.
- Contact or exposure to battery leakage (lead acid) may cause serious injury. If contact or exposure occurs with the skin or in the eyes, or if the chemical is swallowed, immediately call 911.

**Flammable and Explosive Materials Warnings**

- Use of a battery or charger other than the supplied rechargeable battery and charger may cause a fire or explosion. Only use the supplied rechargeable battery and charger with the ride-on toy.
- Do not charge the battery near heat or flammable materials.
- Using the rechargeable battery and charger for any other product many result in overheating, fire or explosion. Never use the rechargeable battery and charger with another product.
- Contact between the positive and negative terminals may result in fire or explosion. Avoid direct contact between the terminals. Lifting the battery by the wires or charger can cause damage to the battery and may result in a fire. Always lift the battery by its case or handles.
- Plug wall charger directly into a wall outlet. Do not use an extension cord when charging as the use of an extension cord can cause a fire.

**Electric Shock / Fire Warnings**

- Liquids on the battery may cause fire or electric shock. Always keep all liquids away from the battery and keep the battery dry.
- Tampering or modifying the electric circuit system may cause a shock, fire or explosion and permanently damage the system. Exposed wiring, circuitry in the charger may cause electric shock. Always keep the charger housing closed.
- Regularly check charger, supply cord and connector for wear and damage. Look for frayed or kinked wires, any exposed inner wires, any missing insulation. If any damage is observed do not plug in the charger and do not charge the battery.

## ⚠ CAUTION

### Re-Charge Interval and Time

**Important!**

- Damage to the battery may occur if it is allowed to drain completely. Do not allow the battery to drain completely.
- Check the battery and charger (supply cord, connector) for wear and damage before charging. Do not charge the battery if damage has occurred. Do not use an extension cord when charging the ride-on toy.
- On average you will need to charge the battery for 10 hours and no more than 24 hours. Failure to charge the battery as directed could cause permanent damage to the battery and void the warranty.
- Only an adult who has read and understands the safety warnings should handle, charge and recharge the battery.

## ⚠ WARNING

### Product Warning

**⚠ WARNING**

This product can expose you to chemicals including lead and lead components, which is known to the State of California to cause cancer and birth defects or other reproductive harm. For more information go to www.P65Warnings.ca.gov.

### Assembly Warnings

- The ride-on toy must be assembled by an adult who has read and understands the instructions in this manual.
- Choking hazard to children under the age of 3 years. This ride-on toy contains small parts that are for adult assembly only. Keep small children away when assembling.
- Remove and dispose of all protective materials, plastic bags and packaging before assembly.

If you are unsure of any information in this manual or have a question regarding assembly or use please call customer service at 877-741-6154. Always keep this manual for reference and include it with resale of the ride-on toy.

# Pre-Ride Safety Checklist

**To be performed by a supervising adult**

Before every ride, it is important to carry out the following safety checks. Do not ride a battery-powered ride-on toy that is not in proper working condition! Replace any worn or broken parts as needed.

**Steering and Control**

- ☐ The steering wheel or handlebars are tightened and secured in the mount or dashboard.
- ☐ The steering wheel or handlebars are positioned so that the rider can easily operate and steer the ride-on. There must be no difficulty for the rider in turning and/or operating the powered foot pedal or hand operated push button.
- ☐ The steering wheel or handlebars are aligned so that the steering column and front wheels are oriented in the same direction.

**Wheels**

- ☐ The wheels are securely attached to the battery-powered ride-on and they are in good condition. It is acceptable to have slight lateral movement in each wheel.
- ☐ The wheels have no holes and are not worn down in any one area and that the traction strips are intact and secured to the wheels.
- ☐ The drive wheel is securely fastened to the gear box, which houses the motor.

**Ride-on**

- ☐ For all electrical components, make sure:
  - The battery is fully charged.
  - The charging cord is NOT attached to the ride-on in any way.
  - All connectors are securely snapped in place and will not come detached while riding.
  - No wiring is exposed, worn, or detached in any way; the motor is not hot to touch.
  - All electrical buttons, including the power button, accelerator foot pedal or hand operated button, and any buttons for lights and sounds, work properly.
  - If the ride-on's electrical components show any sign of damage or missing parts DO NOT RIDE until the condition is corrected.
- ☐ **Make sure the ride-on is:**
  - Clean, dry, and in good condition.
  - All plastic pieces, including fenders, seat, footrests, steering wheel or handlebars, wheels, bumpers, and/or hub caps are securely attached.
  - There are no cracks or structural problems on the ride-on toy.
  - If the ride-on toy shows any sign of damage or missing parts DO NOT RIDE IT until the condition is corrected.

# Parts Checklist

| Number | Part name | Quantity |
|---|---|---|
| 1 | Steering wheel | 1 |
| 2 | Steering wheel bolt (attached to steering wheel) | 1 |
| 3 | Steering wheel nut (attached to steering wheel) | 1 |
| 4 | Seat | 1 |
| 5 | Mirror screw | 2 |
| 6 | Mirror | 2 |
| 7 | Rear axle | 1 |
| 8 | Washer | 7 |
| 9 | Wheel insert | 8 |
| 10 | Wheel | 4 |
| 11 | Wheel nut (attached to axles) | 4 |
| 12 | Hubcap | 4 |
| 13 | Range Rover body | 1 |
| 14 | Steering column | 1 |
| 15 | Remote control | 1 |
| 16 | Battery charger | 1 |
| 17 | Wrench | 1 |
| 18 | Gear box | 1 |

# Parts

**Before you begin assembling, check that all parts listed are present.**

## Hardware Bag:

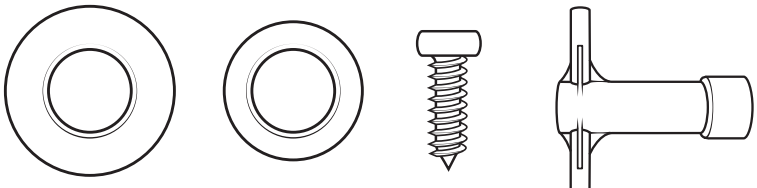

x3 x4 x2 x1

## Tools Required

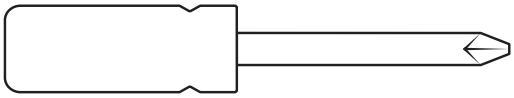

# Assembly: Attach the wheels

**Follow the assembly steps in the order listed below.**

❶ **Insert the rear axle.**

❷ **Insert the gear box through the rear axle and into the wheel well.**
- Connect the white wire connectors on the gearbox to the wire connector coming from the battery

❸ **Attach the rear wheel assembly's**
- Insert a ***wheel insert*** into each side of the wheel hole
- Slide the **washer** onto the axle until it meets the axle stop.
- Slide the ***wheel*** completely onto the axle until it stops. ***Tip!*** when attaching the wheel to the gear box, be sure the gear wheel is completely inserted by into the gearbox.
- Slide the second washer onto the rear axle.
- Fasten the ***wheel nut*** onto the end of the axle.

❹ **Tighten the rear wheel nuts.**
Using the two wrenches, tighten each rear wheel nut, turning in opposite directions ***at the same time***.

❺ **Attach the front wheel assembly's**
Repeat step three.

❻ **Tighten the front wheel nuts.**

❼ **Attach the hubcaps.**
Align the tabs on the hubcaps with the slots in the wheel rim. Press the hubcaps firmly until they snap into place.

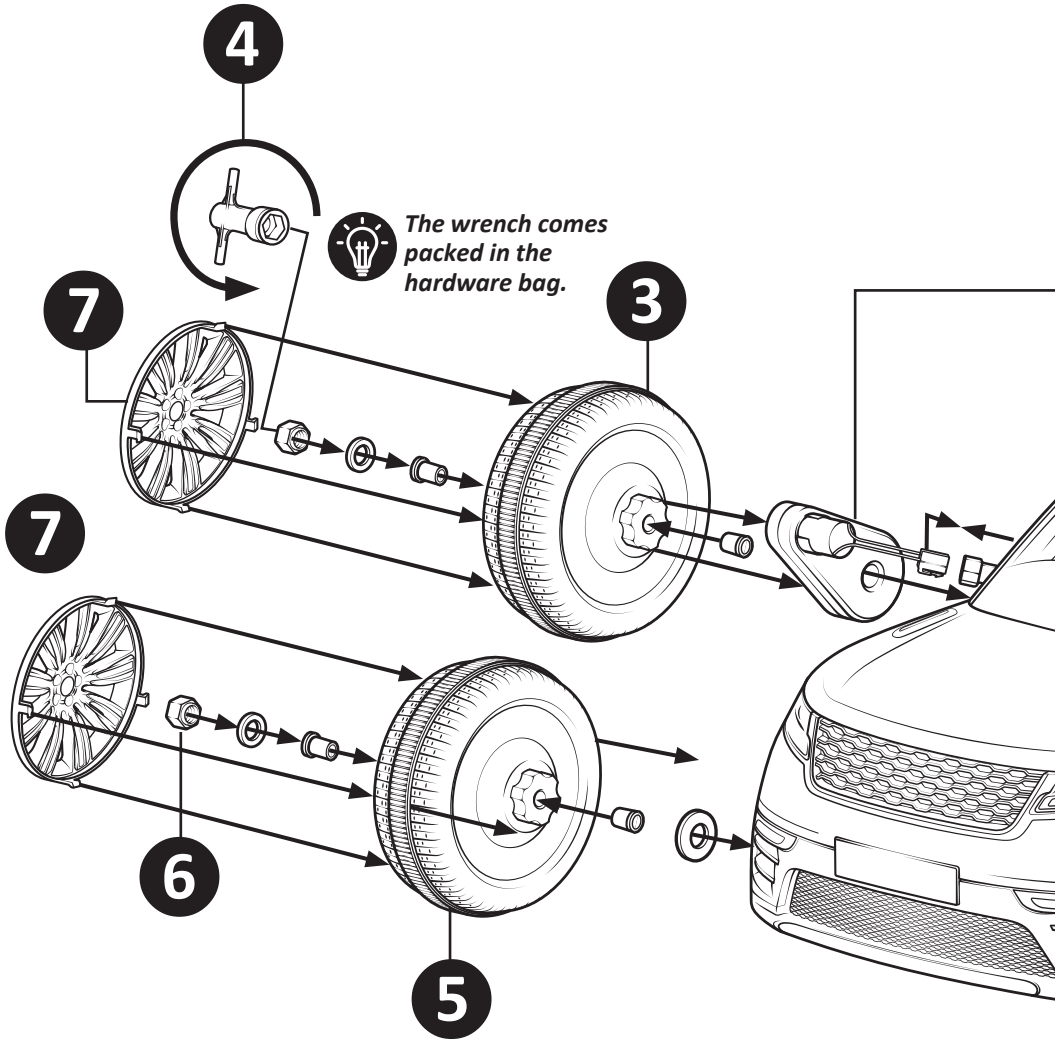

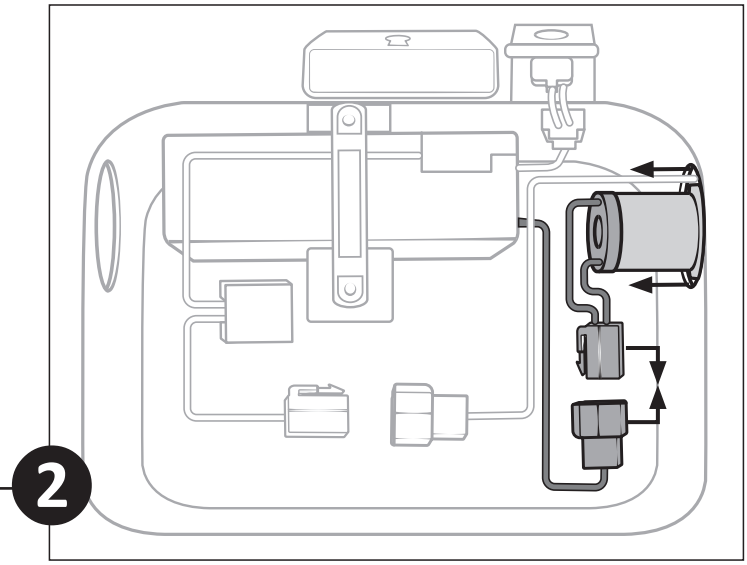
2

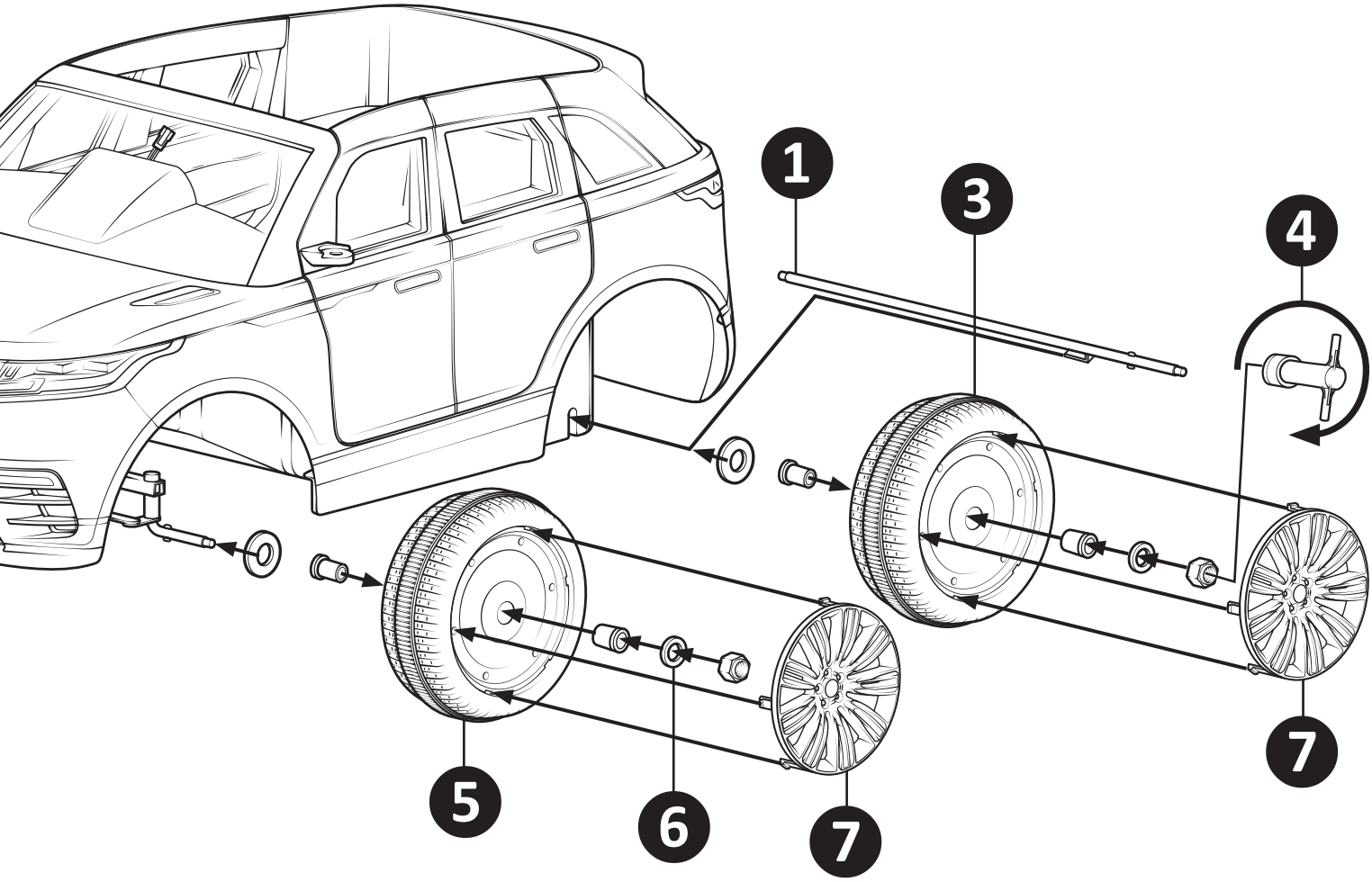
1
3
4
5
6
7
7

# Assembly: Attach the steering wheel, Steering column,

**Follow the assembly steps in the order listed below.**

❶ **Insert the steering column.**
- Working from under the body, insert the short end of the **steering column** through the steering column bracket. Insert the long end up through the opening in the dashboard.

❷ **Attach the steering wheel.**
- Remove the nut and bolt from the steering wheel
- Connect the wire connectors coming from the steering column to the wire connector coming from the steering wheel
- Insert the steering wheel over the steering column
- Insert the nut into the hex shape opening on the steering wheel
- Insert the bolt through the steering wheel and steering column and fasten into the nut

❸ **Attach the mirrors.**
- Insert the end of the mirror into the mirror inset on the door
- Working from the inside of the door, insert a screw through the door into the mirror and tighten the screw

❹ **Make the one time battery connection** BEFORE attaching the seat. See page 10.

❺ **Attach the seat.**
- Insert the hook on the back of the seat into the opening on the back wall of the body
- Rotate the seat down and lock the seat into place

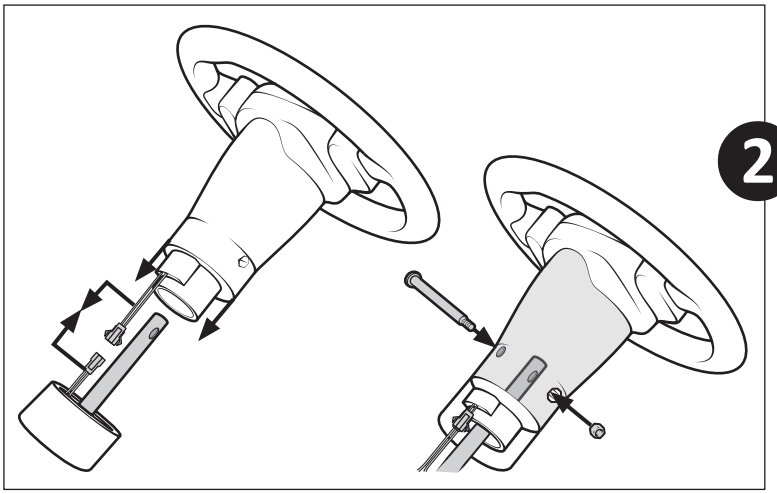


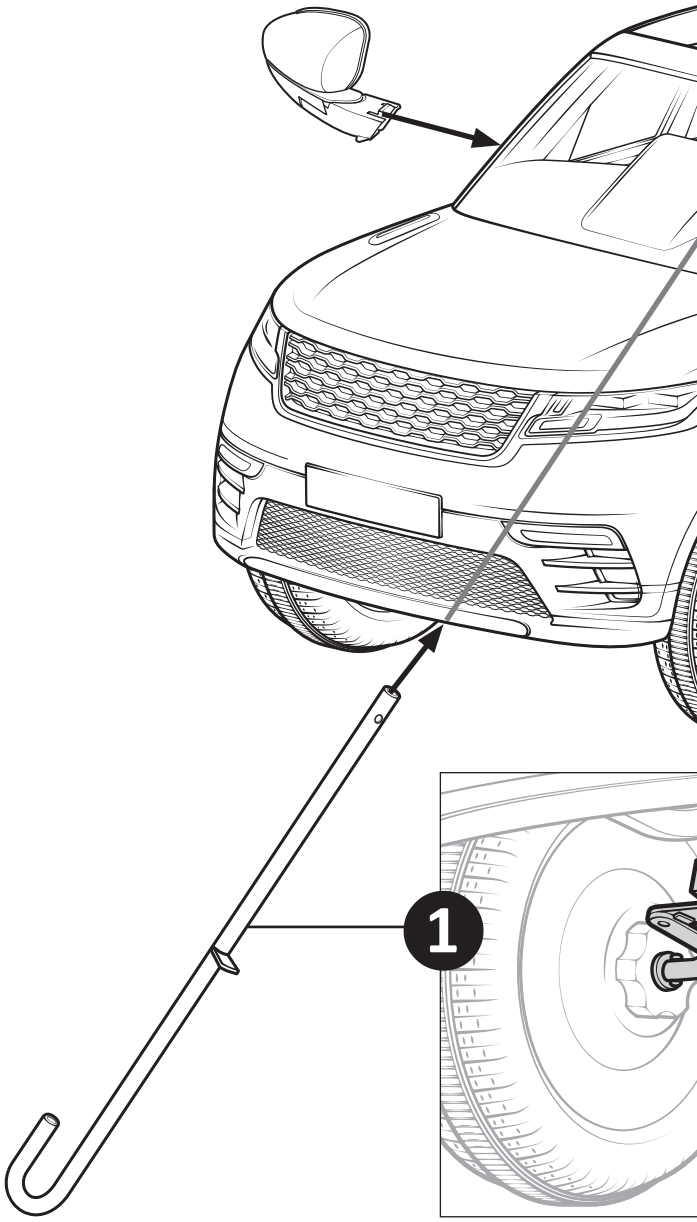

# mirrors and seat

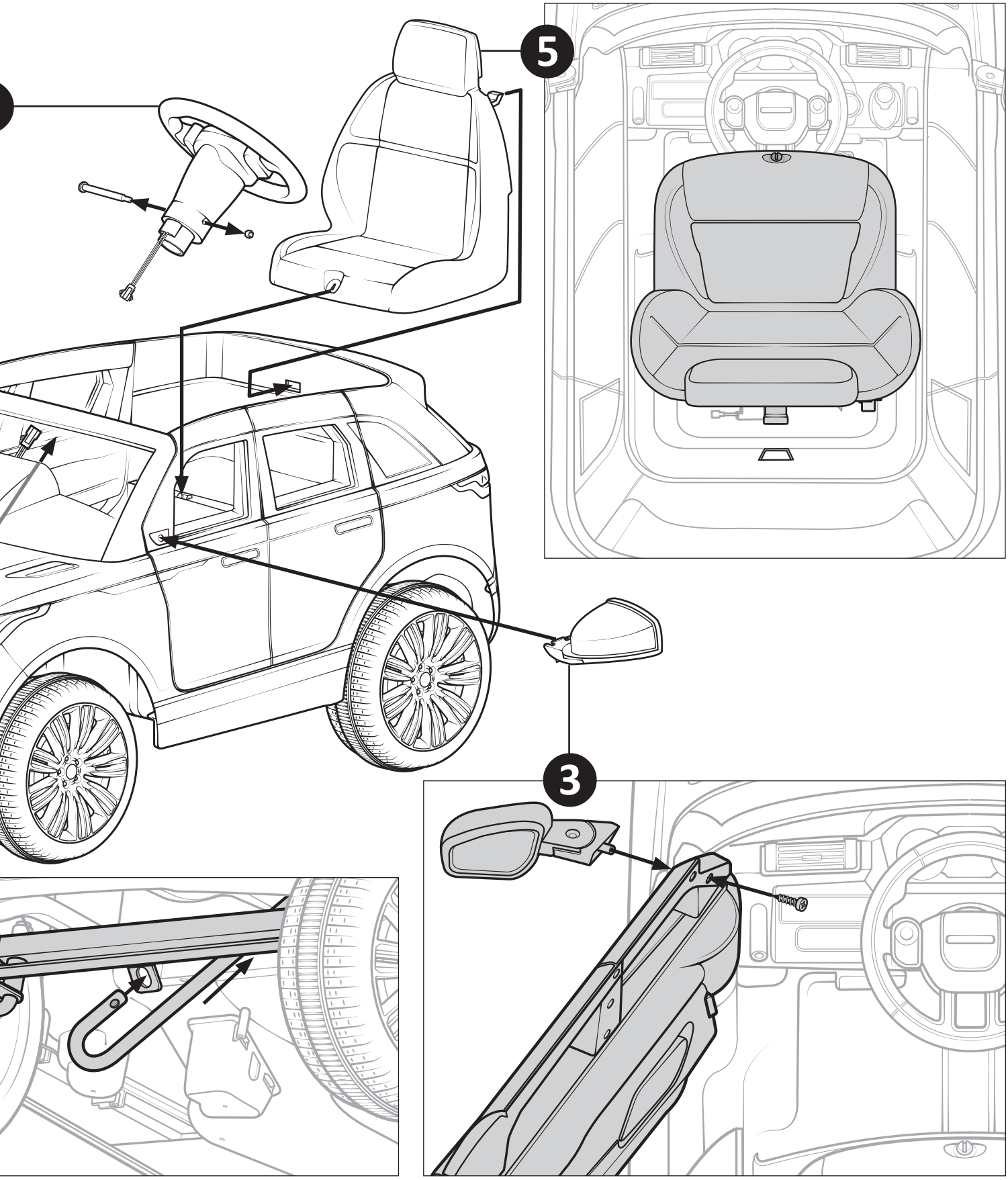

# Use

## ⚠ WARNING

- The battery contains hazardous material that may cause serious injury or death if handled, connected, or charged improperly. Only an adult who has read and understands the warnings and instructions in this manual should handle, connect, or charge the battery. Always contact Pacific Cycle at 1-877-741-6154 if you have any questions or concerns regarding handling, connecting, or charging the battery.
- Charging the battery more than 24 hours could cause the battery to explode or ignite resulting in serious injury, death or property damage. Do not charge the battery for more than 24 hours. Always disconnect the product from the charger after the battery is completely charged.
- A damaged supply cord, connector, or charger could cause burns to the skin, an electrical fire, serious injury, death, or property damage. Always inspect the supply cord, connector, and charger for damage. (e.g., frayed or kinked wires, exposed inner wires, missing insulation) before use. If damaged, do not use the supply cord, connector or charger for any purpose and properly dispose.
- Connecting the battery and battery charger to an extension cord(s) could result in overheating, explosion, fire, serious injury, death, or property damage. Never charge the battery using an extension cord. Always plug the charger directly into a wall outlet.
- See additional battery and charging warnings on page 3.

## NOTICE

- The average time to charge the battery is 10 hours. Failure to follow the instructions regarding charging the battery may result in permanent damage to the battery and void the warranty.
- The battery may become damaged if allowed to drain completely. Always keep the battery charged.

### Make the One-time Battery Connection

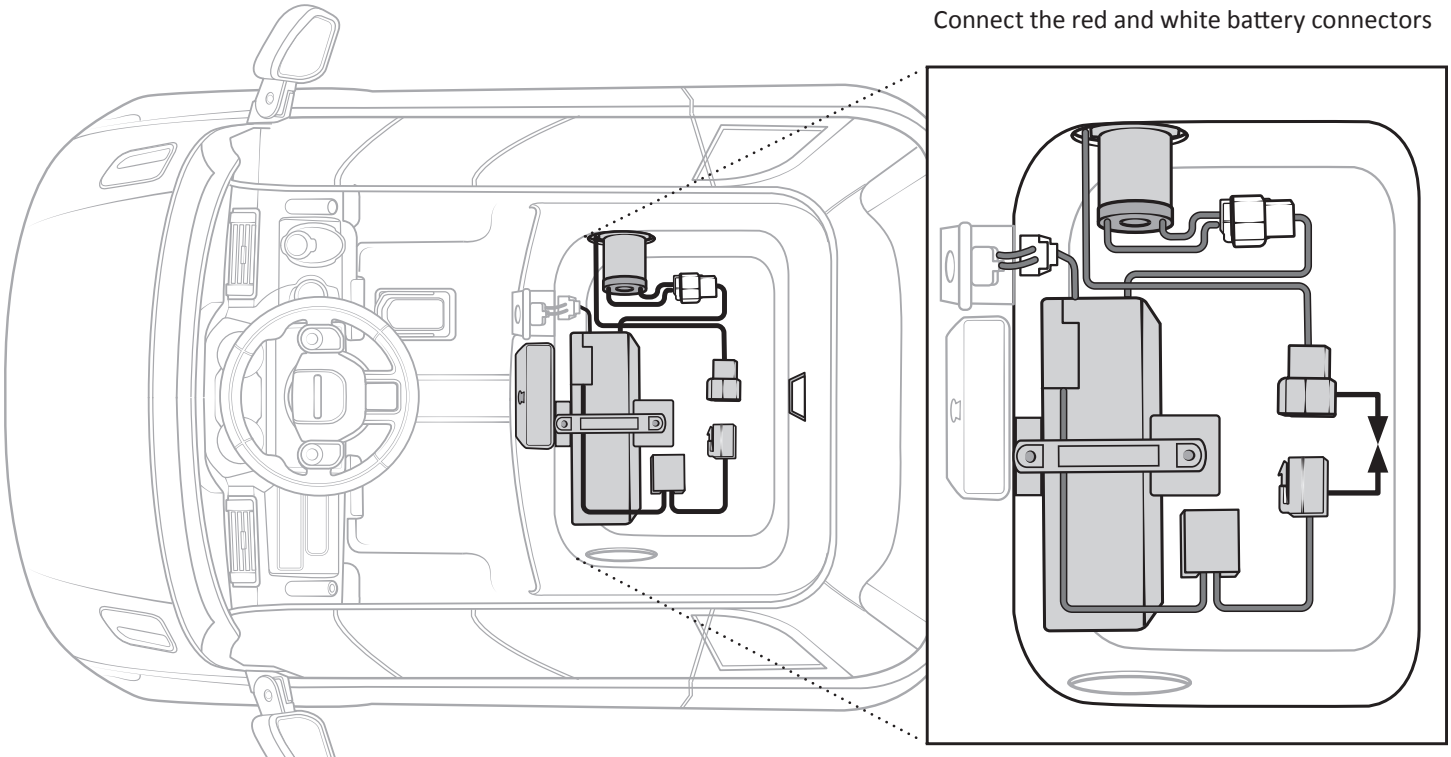


After the connections are made. Attach the seat (see page 8).

## Connect the Battery Charger

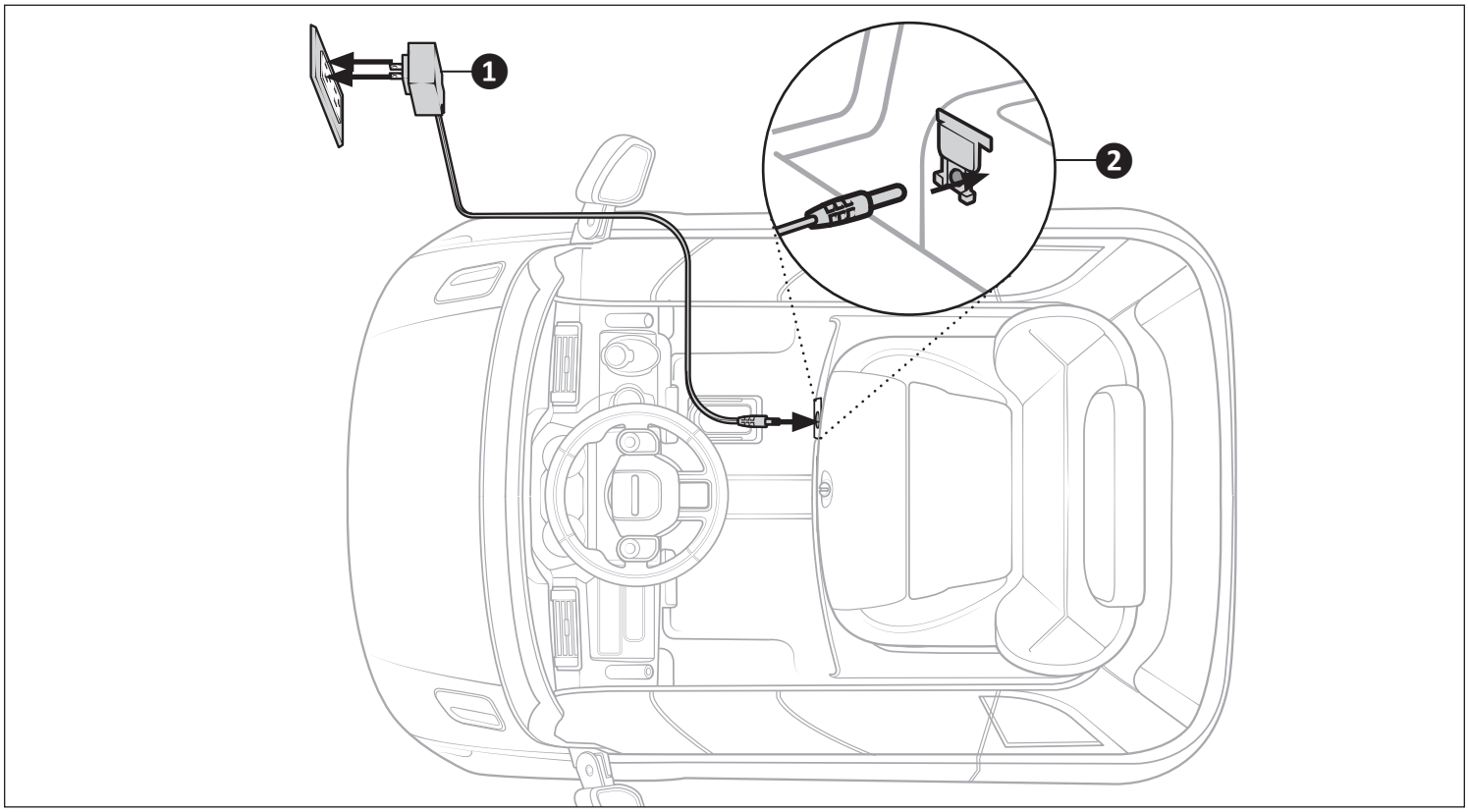


## Charge the Battery

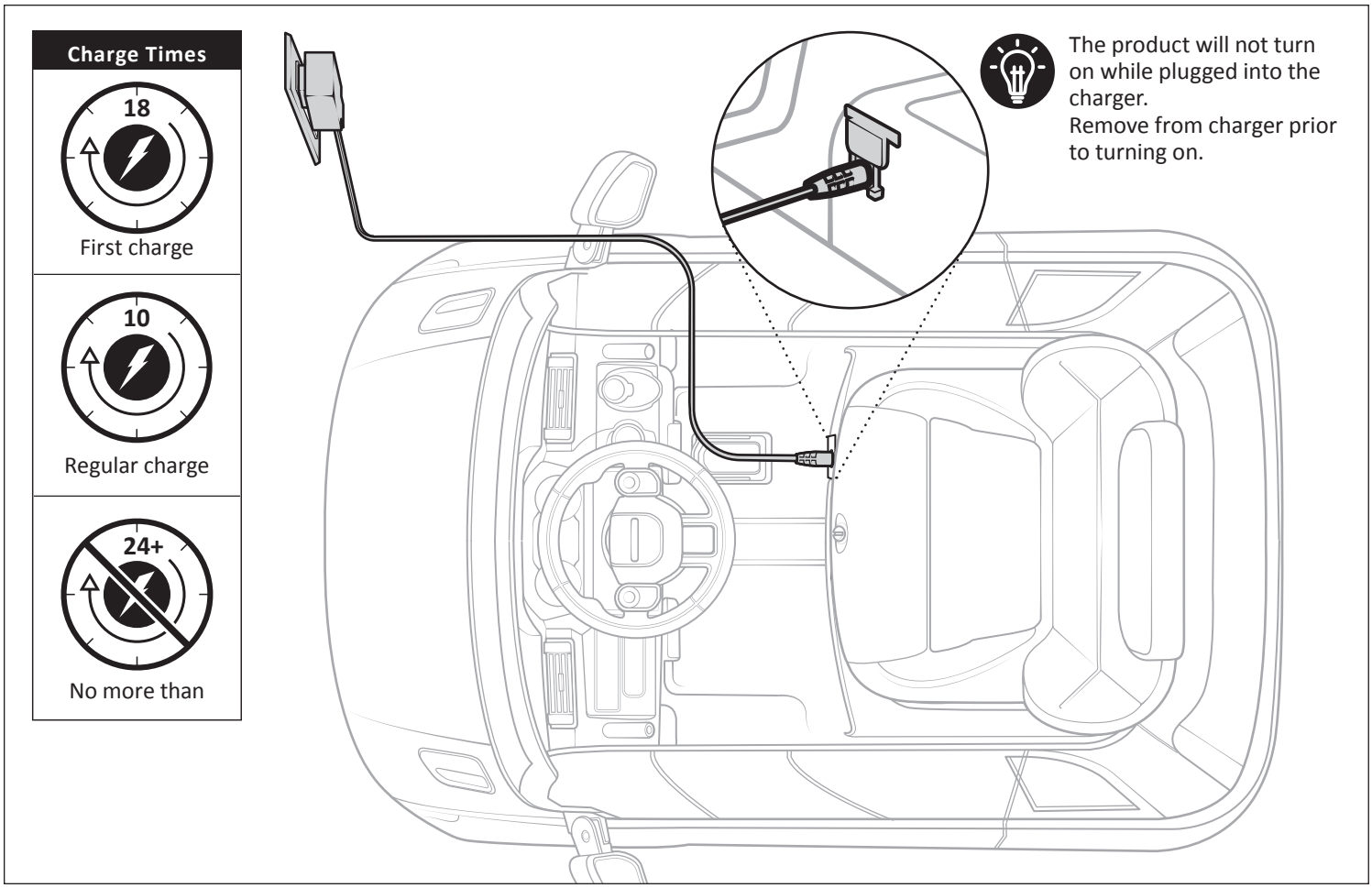
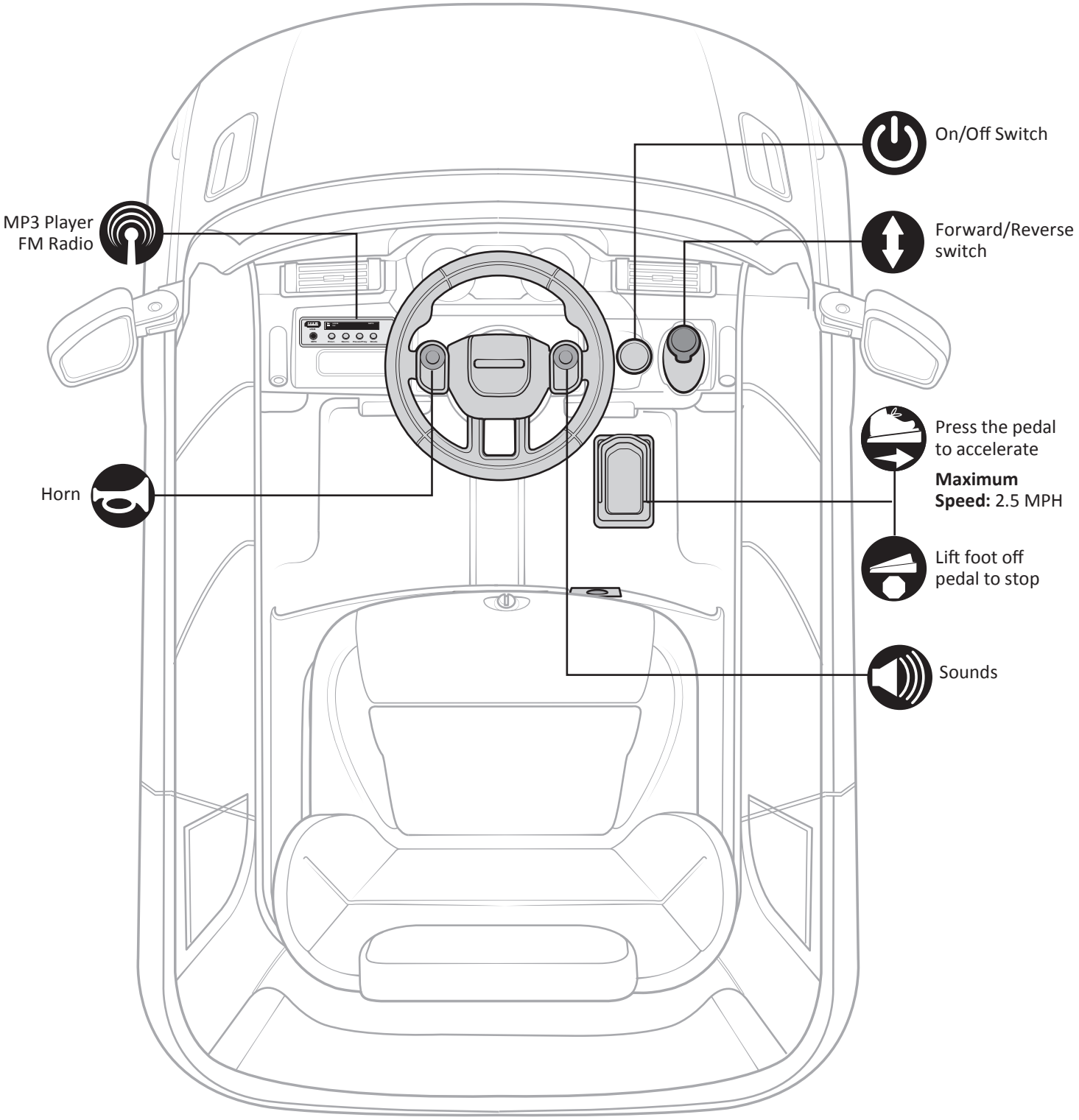
## Controls and Functions