Pairing the Remote Control to the Ride-on

⚠ WARNING

- DO NOT mix old and new batteries.
- DO NOT mix alkaline, standard (carbon-zinc), or rechargeable (nickel-cadmium) batteries.
- Non-rechargeable batteries are not to be recharged. Batteries are to be inserted with the correct polarity. Exhausted batteries are to be removed from the toy. The supply terminals are not to be short-circuited. Rechargeable batteries are only to be charged under adult supervision.
- Rechargeable batteries are to be removed from the toy before being charged.

This device complies with part 15 of the FCC rules. Operation is subject to the following two conditions: 1. This device may not cause harmful interference, and 2. This device must accept any interference received, including interference that may cause undesired operation.

Insert the batteries (Remote batteries not included)

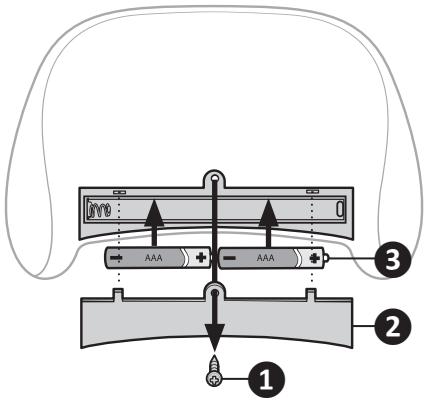

1. Remove the small screw from the battery compartment cover.
2. Lift the battery cover off the remote control.
3. Insert two ***AAA-size*** batteries into the battery compartment as shown.
4. Replace the battery compartment cover and fasten with the small screw you removed in step one.

Pairing the remote control to the ride-on

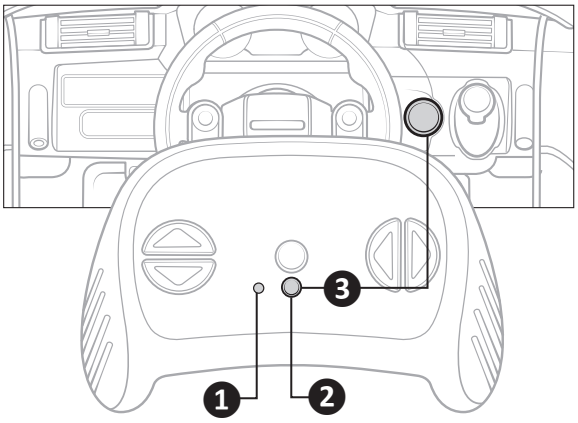

1. The ***speed indicators*** will flash 3 times when the batteries are installed.
2. Press the ***Car Select indicator*** for approximately 2 seconds. The Car Select indicator will flash.
3. Press the ***On/Off switch*** on the car immediately. If the ***Car Select indicator*** is not illuminated, repeat step 2.

Remote Control Use and Functions

Keep the stop button pressed down to override or prevent further ride-on movement. Release stop button to transfer control back to rider.

Reminder: The remote control is for adult use only. Please refer to page 2 for additional safe riding warnings.

Press the top button to move forward, press the bottom button to move in reverse.

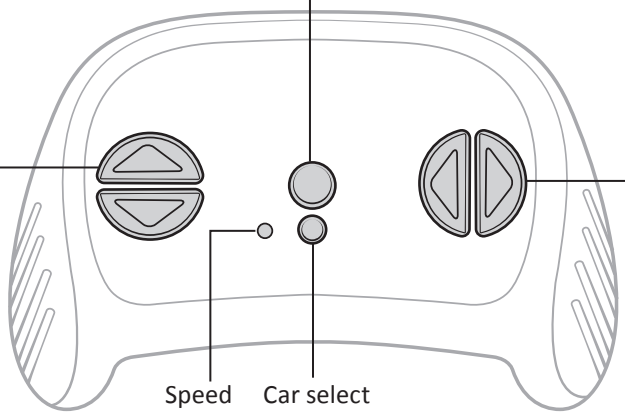

Press the left button to turn left, press the right button to turn right.

Maintenance

Battery Replacement and Disposal

The battery will eventually lose the ability to hold a charge. Depending on the amount of use, and varying conditions, the battery should operate for one to three years.

Important! Recycle the dead battery responsibly. The battery contains lead acid (electrolyte) and must be disposed of properly and legally. It is illegal in most areas to incinerate lead acid batteries or dispose of them in landfills. Take it to a federal or state-approved lead acid battery recycler, such as an authorized service center or your local automotive battery retailer. Do not throw the battery away with your regular household trash!

This ride-on toy contains a sealed lead acid NON SPILLABLE BATTERY. This battery must be recycled.

The ride-on toy should be checked for damage, missing or badly worn parts before each use.

- Check the tightness of the fasteners before each use.
- Check the tightness of the wheels before each use.
- Ensure the battery is securely in place before each use.
- Store the ride-on toy indoors or cover it with a tarp to protect it from the wet weather. Keep it away from sources of heat, such as stoves and heaters.
- Do not leave the vehicle in the sun for long periods of time or fading may occur. Store in shade or cover with tarp.
- Do not wash the vehicle with a hose.
- Do not wash the vehicle with soap and water.
- Clean the vehicle with a soft, dry cloth. To restore shine to plastic parts, use a non-wax furniture polish. Do not use car wax, abrasive cleaners or wash the vehicle with soap and water. Water will damage the motor, electrical system and battery.

Service

Do not return this product to the place of purchase. If your ride-on toy needs service, repairs or replacement parts, call:

Pacific Cycle Consumer Relations

Hours: 8:00 am – 5:00 pm (CST) Monday - Friday

Phone: 877-741-6154

Email: customerservice@kidtraxtoys.com

For a complete list of replacement parts, please contact Pacific Cycle Consumer Relations. To order parts, please have the model and serial number available, which can be found underneath the seat on the battery cover.

FCC Statement

This device complies with part 15 of the FCC Rules. Operation is subject to the following two conditions: (1) This device may not cause harmful interference, and (2) this device must accept any interference received, including interference that may cause undesired operation.

Any changes or modifications to this unit not expressly approved by the party responsible for compliance could void the user's authority to operate the equipment.

NOTE: This equipment has been tested and found to comply with the limits for a Class B digital device, pursuant to part 15 of the FCC Rules. These limits are designed to provide reasonable protection against harmful interference in a residential installation. This equipment generates, uses and can radiate radio frequency energy and, if not installed and used in accordance with the instructions, may cause harmful interference to radio communications.

However, there is no guarantee that interference will not occur in a particular installation. If this equipment does cause harmful interference to radio or television reception, which can be determined by turning the equipment off and on, the user is encouraged to try to correct the interference by one or more of the following measures:

- Reorient or relocate the receiving antenna.
- Increase the separation between the equipment and receiver.
- Connect the equipment into an outlet on a circuit different from that to which the receiver is connected.
- Consult the dealer or an experienced radio/TV technician for help.

Warranty

One Year Limited Warranty | Six-Month Limited Warranty on Battery

Pacific Cycle, Inc. (PC) warrants this product to the original retail purchaser as follows: The ride-on toy (except for the battery) is warranted against defective materials or workmanship for one year from the date of original purchase. The battery is warranted against defective materials or workmanship for six months from the date of original purchase. An original receipt is required to validate your warranty. PC will, at its option, provide replacement parts or replace this product. PC reserves the right to substitute if the part or model has been discontinued. To make a claim under this warranty you must contact us at www.kidtraxtoys.com; fax us at 1-800-858-2800, 24 hours a day; write to Kid Trax Consumer Relations Department, Kid Trax Toys,P.O. Box 344 Olney, IL 62450 or call 1-877-741-6154 from 8 a.m. to 5 p.m., Monday through Friday, CST. Proof of purchase is required, and shipping charges are the responsibility of the consumer.

Warranty Limitations

This warranty does not include damages which arise from accident, misuse, abuse, neglect or other causes not arising out of defects in materials or workmanship, nor does it cover damages arising out of service by other than an authorized PC service center. For personal use only. Not for commercial use. The original owner shall pay all labor charges connected with the repair or replacement of all parts. Under no circumstances does this limited warranty include the cost of shipment or transportation to or from an authorized repair center or Kid Trax retailer.

Limitation of Damages

The warranty and remedies as set forth are exclusive and in lieu of all others, oral or written, expressed or implied. In no event will PC or the dealer selling this product be liable to you for any damages, including incidental or consequential damages, arising out of the use or inability to use this product. Some states do not allow limitations as the exclusion or limitation of incidental or consequential damages, so the above limitations may not apply to you.

Limitations of Warranties and Warranty Terms

Any warranties, including implied warranties of the merchantability and fitness for a particular purpose, shall be limited to the duration and terms of the express written warranty. This warranty gives you specific legal rights, and you may have other rights, which vary from state to state.

Neither PC nor the dealer selling this product authorized any person to create for it any other warranty, obligation or liability in connection with this product.

Pacific Cycle Consumer Relations
Hours: 8:00 am – 5:00 pm (CST) Monday - Friday
Phone: 877-741-6154
Email: customerservice@kidtraxtoys.com

A DIVISION OF DOREL INDUSTRIES

PACIFICCYCLE™

© 2020 Pacific Cycle Inc.

4902 Hammersley Rd.
Madison, WI 53711