Internal Photos

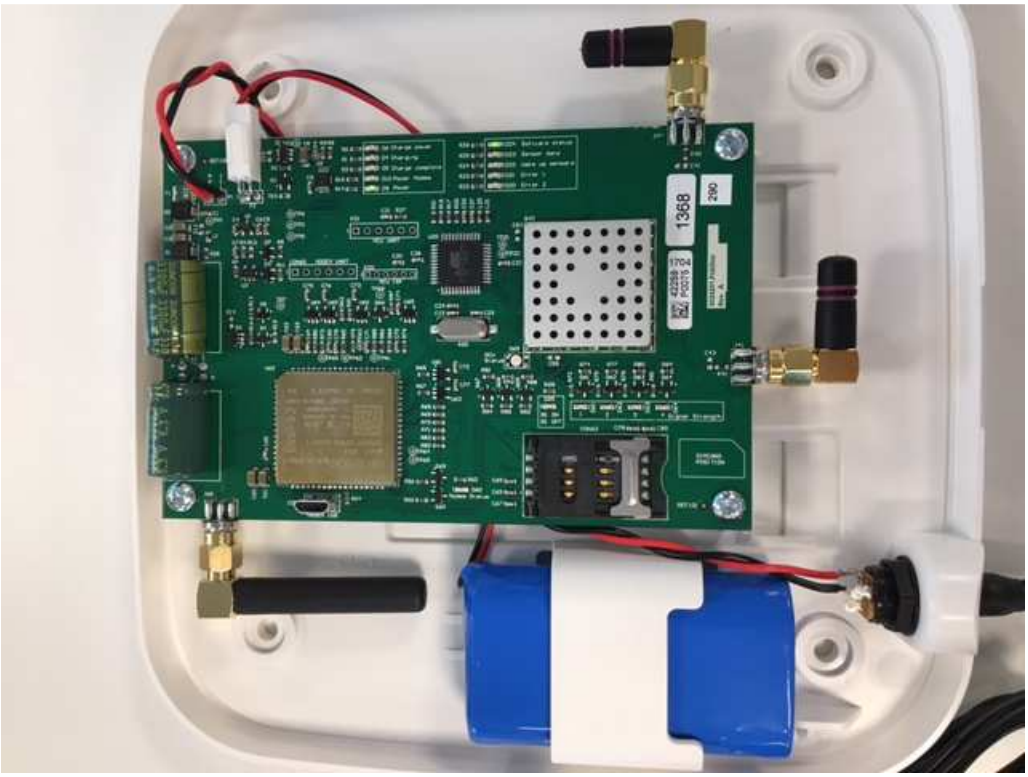

REVISIONS			
REV.	DESCRIPTION	ECN	DATE
A	RELEASE FOR PRODUCTION	E005381	2017-04-20

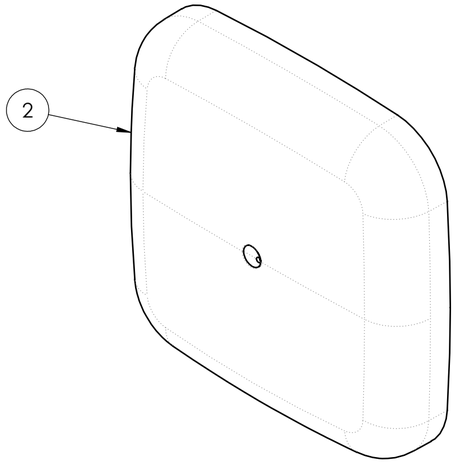

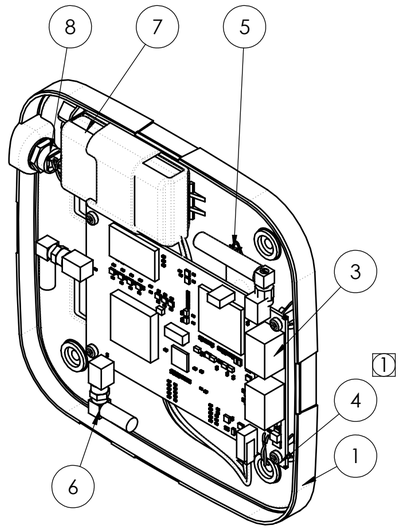

20		
19		
18		
17		
16		
15		
14		
13		
12		
11		
10		
9		
8		
7		
6		
5		
4		
3		
2	682920	WHITE
1	652810	WHITE
ITEM	ARTICLE NUMBER	COLOR - IMAGE
ARTICLE - COLOR - IMAGE - TABLE		

NOTES:

1. USE ARTICLE - COLOR - IMAGE TABLE TO MATCH ARTICLE NUMBER TO ITS CORRESPONDING INJECTION MOLDED PART COLOR.
2. ALL VENDOR WORK INSTRUCTIONS FOR ASSEMBLY AND IN-PROCESS TESTING AND CHECKOUT AS WELL AS SUBEQUENT CHANGES MUST BE APPROVED BY SCA PRIOR TO USE.
3. ALL GEOMETRIC FEATURES SHOWN WITHOUT DIMENSIONS SHALL BE DEFINED BY THE 3D CAD MODEL.
4. DRAWING STANDARDS PER ISO 128-1:2003 UNLESS OTHERWISE NOTED.
5. DIMENSIONAL AND GEOMETRICAL TOLERANCES PER ISO 1101:2004(E) UNLESS OTHERWISE NOTED.
6. ALL DIMENSIONS IN (X.XXX) ARE CRITICAL.
7. ALL DIMENSIONS IN (X.XXX) ARE REFERENCE ONLY.

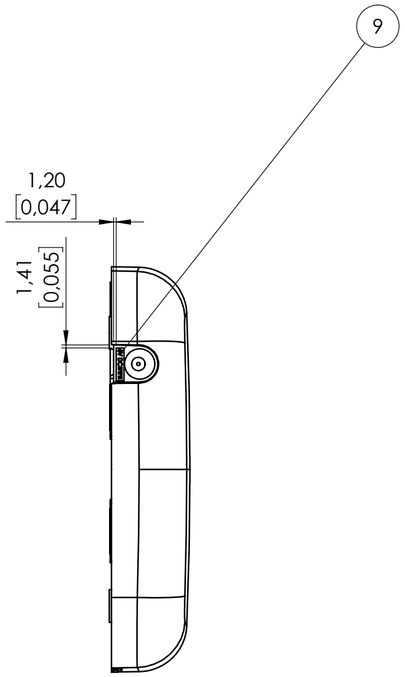

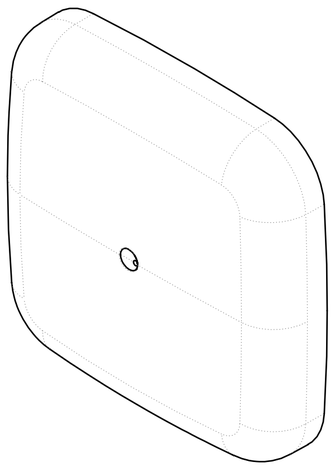

ITEM NO.	QTY.	PART NUMBER	DESCRIPTION
9	1	0005869	LABEL, DCU POWER SPECIFICATION
8	1	0027851	CABLE ASSEMBLY, DCU POWER
7	1	0005849	CABLE ASSEMBLY, DCU BATTERY PACK
6	2	0027848	ANTENNA, 2,4 GHz
5	1	0005855	ANTENNA, GSM
4	4	0005844	SCREW, M3.5 X 1.29 X 8mm, LG, #8 TORX, PAN HEAD
3	1	0024202	PCB MAINBOARD, TORK EASYCUBE GATEWAY
2	1	0005867	LID, DCU
1	1	0005868	BASE, DCU

BILL OF MATERIAL - ASSEMBLY, TORK EASYCUBE GATEWAY - 0025013

TORQUE SPECIFICATION CHART	
SYMBOL	TORQUE
1	1.5 Nm [1.1 in lbs]

PROPRIETARY AND CONFIDENTIAL
THE INFORMATION CONTAINED IN THIS DRAWING IS THE SOLE PROPERTY OF SCA GLOBAL HYGIENE CATEGORY. ANY REPRODUCTION IN PART OR AS A WHOLE WITHOUT WRITTEN PERMISSION IS PROHIBITED.

PROJECTION FIRST ANGLE

SCA Care of Life

SCA GLOBAL HYGIENE CATEGORY

DRAWN BY: DALELVEN

DATE: 2016-12-20

REFER TO ECN FOR APPROVALS AND DATES

UNLESS OTHERWISE SPECIFIED DIMENSIONS ARE IN MILLIMETERS [INCHES] AND TOLERANCES FOR

LINEAR: .X = ±.4 [.015]
.XX = ±.25 [.010]
.XXX = ±.127 [.005]

ANGULAR: ±1°

DESCRIPTION: ASSEMBLY, TORK EASYCUBE GATEWAY

PREVIOUS PART NUMBER:

STATE: RELEASED

SIZE	SCALE	SHEET
A2	1:2	1 OF 1

DWG NO. 0025013

REVISION A

SCA TEMPLATE A2