LOXURY-I

Model No. LL83AR

UNILOCK

2013. 10

1. Specific Features

- 3 levels key (RFID tag) management system
- Standard ISO-14443A RFID
- High glossy front panel & hidden LED Icons
- 1 time or permanent mode
- Burglar alarming when opening by force
- Warning alarms for low battery or abnormal status
- Possible use of external 9V battery
- Melody on-off setting
- In-use LED icon
- High security up and down deadbolt
- Using 3 AA type Alkaline batteries last for 1 year
- Material: PC/ABS(Body), Steel(Dead Bolt)

2. Sizes

- Front: 52(H) * 93(W) * 17(T) mm
- Rear: 133(H) * 67(W) * 26.5(T) mm

3. Supported door thickness

- Size A: 15~20mm (0.59~0.78 inches)
- Size B: 20~25mm (0.79~0.98 inches)
- Size C: 25~30mm (0.99~1.18 inches)
  - Contact us for less than 15mm or larger than 30mm

4. Part Names

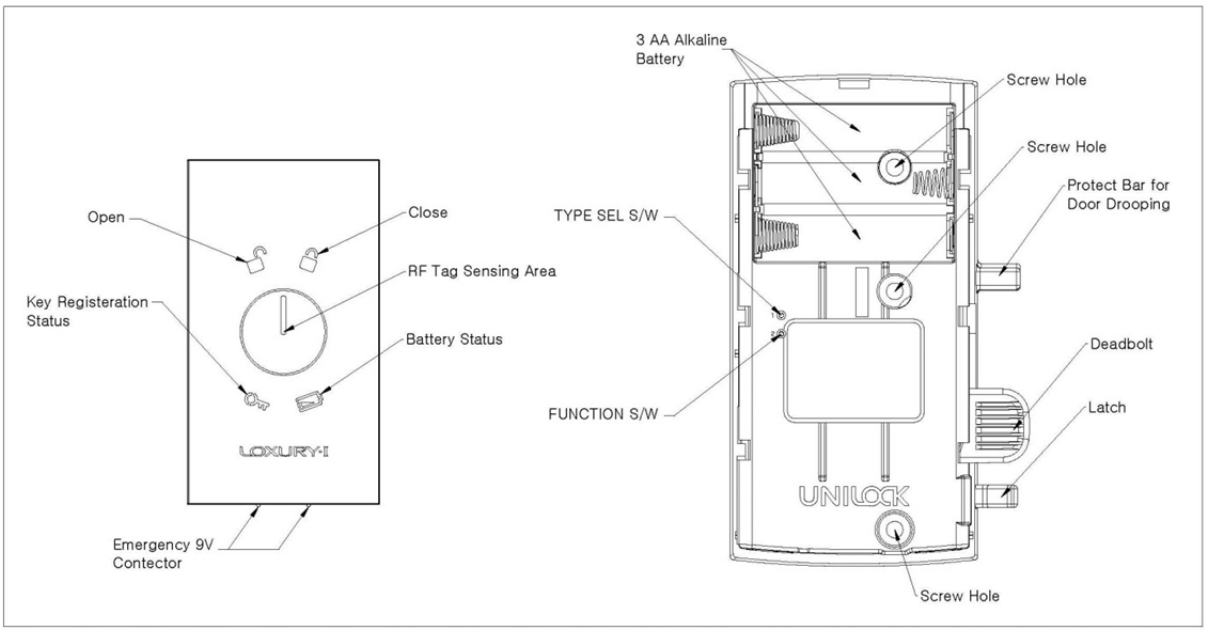

5. Change Type (Toggle)

- Remove battery from the lock.
- Press “Type Sel. S/W” (see paragraph 4 “Part Names”, with a pin like clip) + press “Latch” + insert batteries and stay for 5 seconds.
- There will be a beep and “Open” LED blinks 3 times if it is changed for type A.
- There will be a beep and “Close” LED blinks 3 times if it is changed for type B.

RFID Tag	Type A	Type B
Owner Key	1	1
Master Key	1	20
User Key	1	20
Cleaner Key	1	20

6. Change Mode Options (Toggle)

- Press “Function S/W”, see paragraph 4 “Part Names”, with a pin like clip. There will be beeps sequentially. Following functions can be changed by touch owner key after each beep.

How To Change	Function	Sound	Factory Set
1st Beep + Owner key	Enable locking status LED	Sol-Do	
	Disable locking status LED	Beep	Default
2nd Beep + Owner key	Enable Cleaners Key	Sol-Do	Default
	Disable Cleaners Key	Beep	
3rd Beep + Owner key	Auto Locking (Automatically locked when close door)	Sol-Do	
	Manual Locking (Touch user key or password for locking)	Beep	Default
4th Beep + Owner key	Enable Beep Sound	Sol-Do	Default
	Disable Beep Sound	Beep	
5th Beep + Owner key	1 Time Use Mode	Beep	
	Membership Use Mode	Sol-Do	Default

7. LED Icons

Icon	Meaning	Color	Status
	Locking Status	Green	Open
		Red	Closed
	Battery Status	Orange	Change Battery
	Processing Status	Yellow	Under Processing
		Red	Abnormal
		Green	Normal

8. Registering and Using RFID keys

- Loxury I is using IRDA sensing technology for waking it up from power saving mode. Direct sunlight or strong three wave light bulb may interfere with the IRDA sensing function. Please avoid from direct sunlight or strong three waves light.

A. Register an Owner key

- First used RF tag became an Owner key.

① Install LL83AR into the locker.

② Insert 3 AA type alkaline batteries for activating.

③ Touch any ISO-14443A RFID tag. There will be beeps 3 times and green key logo LED blinking when it is registered as an Owner key.

- 1 Owner key can be registered for a LL83AR. Owner key cannot access the lock.

B. Register Master key(s)

① Touch the Owner key

② Touch an extra RF tag (LED blinks during registration mode for 8 seconds). There will be beeps 3 times and green key logo blinking when it is registered as a Master key.

③ (For B type) Touch another RF tag sequentially for up to 20 tags total or touch same tag twice to end the registration.

- The Master key can open the LL83AR.
- After use the Master key, the deadbolt unlocked even the door is closed.

C. Register & using User key(s)

① Touch the Master key

② Touch an extra RF tag (LED blinks during registration mode for 8 seconds). There will be beeps 3 times and green key logo blinking when it is registered as a Master key.

③ (For B type) Touch another RF tag sequentially for up to 20 tags total or touch same tag twice to end the registration.

- The User key can lock or unlock the LL83AR.

D. Change or delete User key (while lost user key/password)

i. Touch Master key for deleting all registered User keys.

ii. Register new RF Tags.

9. Install Drawings

(For Right Hinge Door)

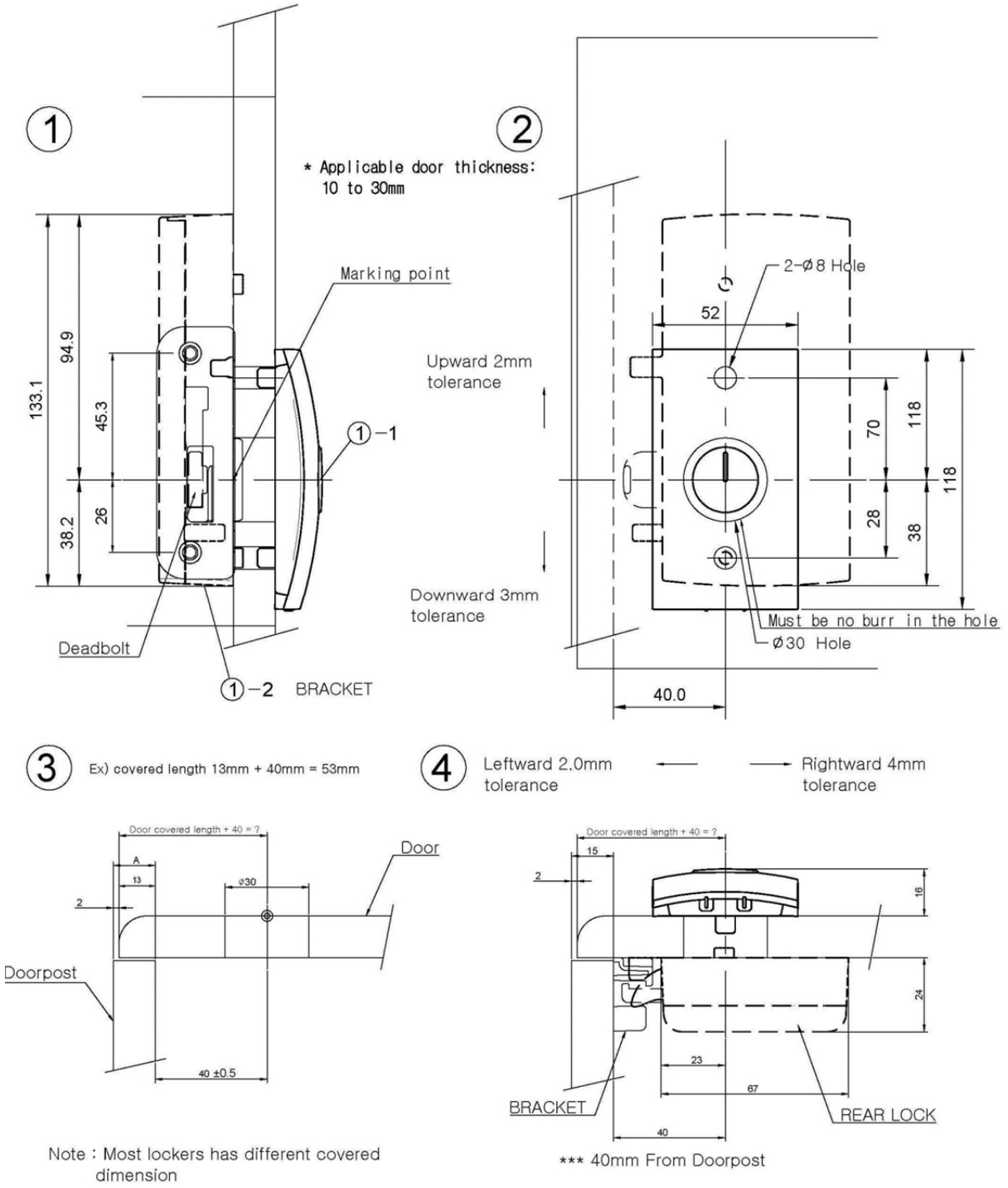

(For Left Hinge Door)

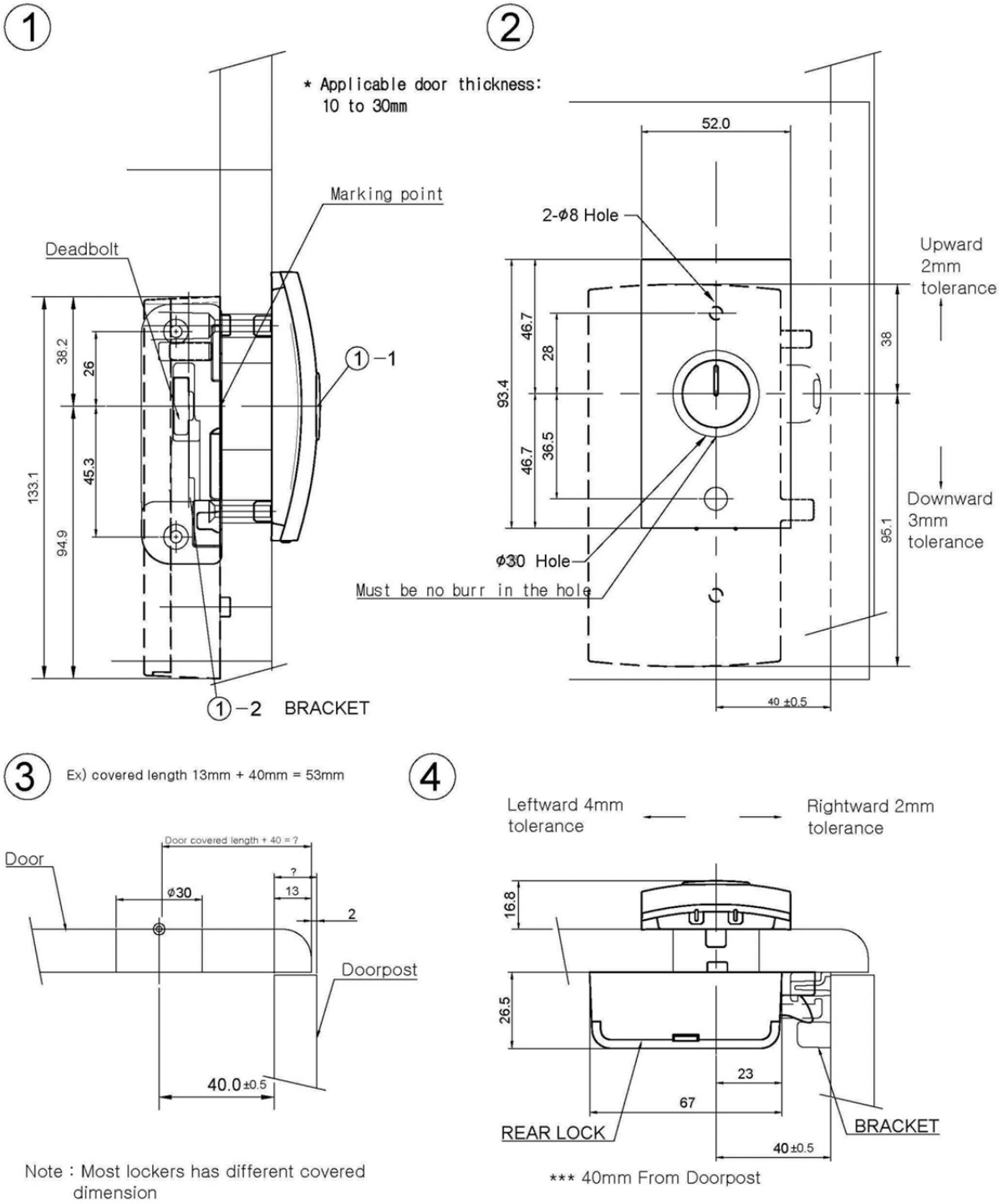

(For Two Doors)

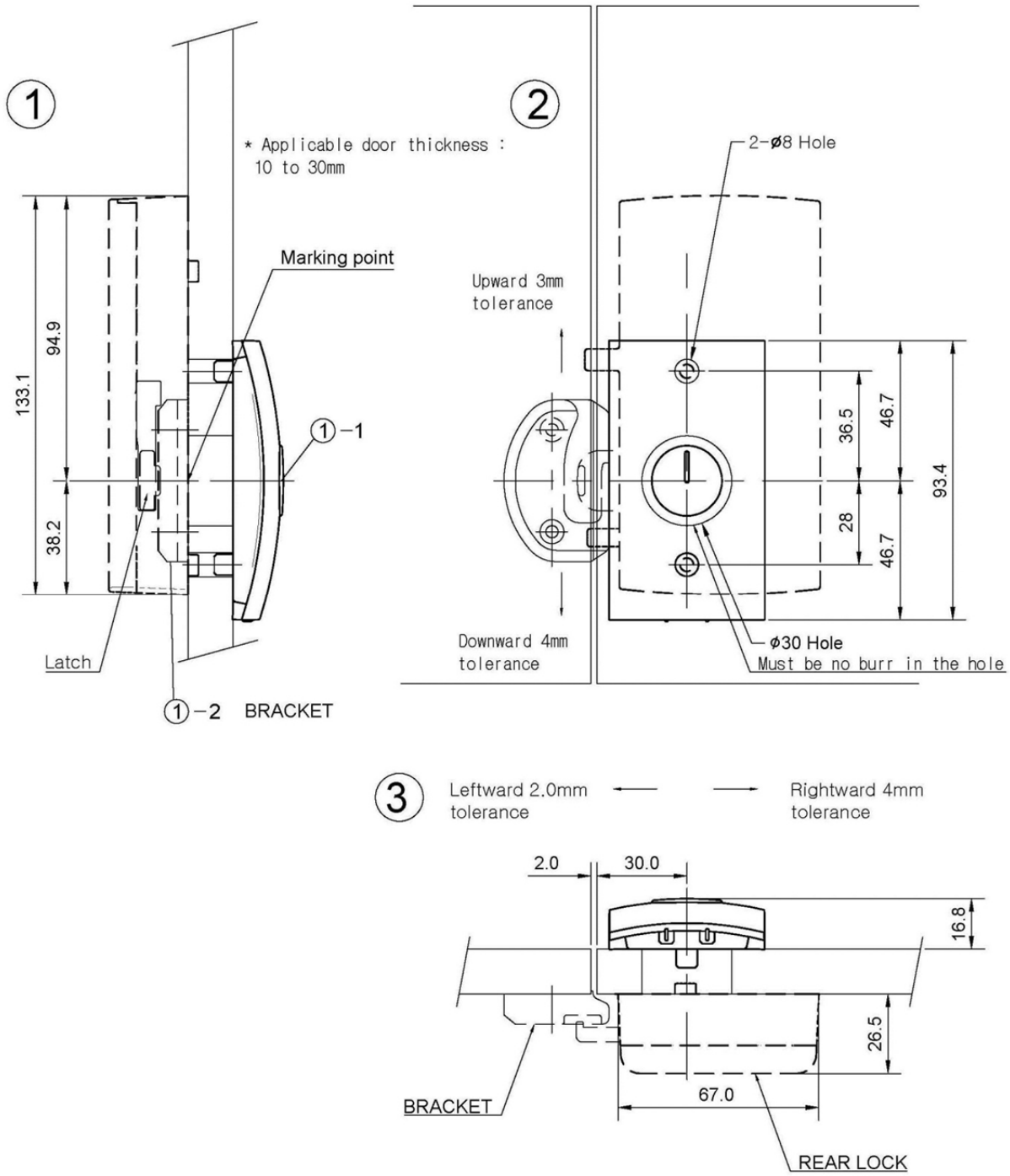

10. Out of Battery

- There will be battery warning alarms, 5 beeps, while open or close the lock if the batteries are almost flat.

- Standard 9V battery can be used at this situation. (Polarity is does not matter at this time)

  i. Contact 2 terminals, "+" and "-", of the 9V battery into the 2 external terminals on the lower front.

  ii. Use a registered Master card to open.

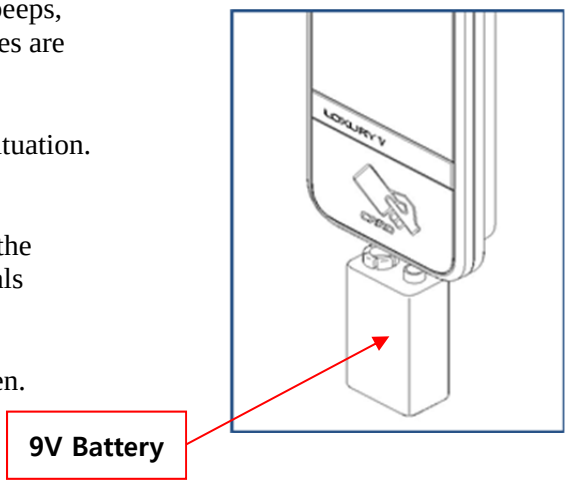

11. Reset Memory (Clear Memory)

- Possible to clear all memory of registered RF keys, and return the lock to factory setting.
  - Connect Front and Rear units and install batteries for the Reset Memory process.

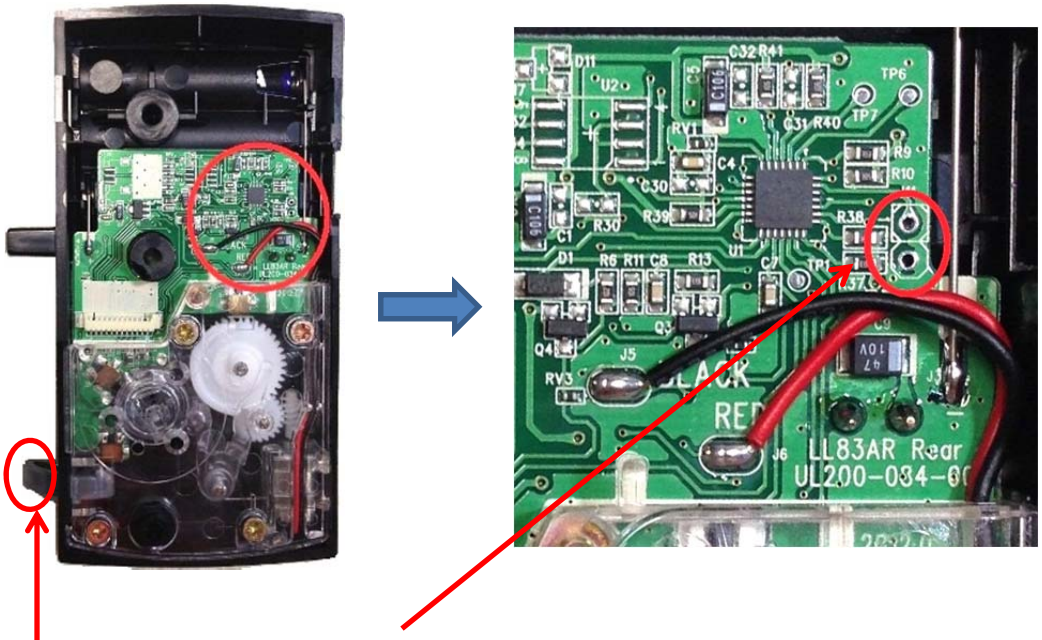

1. Coupling the "RESET" soldering points with a sharp tweezers or similar tool and press the "Latch" (page 1). Release the Latch and the Points for resetting memory.
   - Beep 1 times if the reset is done.
   - Register Owner key and Master Key again.

12. Emergency Opening

- There is an emergency "Break to Opening Process" if the lock does not work at all even if try paragraph 11 "Out of Battery"

1. Drill a hole at the center of the RF sensing window at right angle by use of 6mm drill bit for 21mm depth. (Customized drill bits are sold separately)

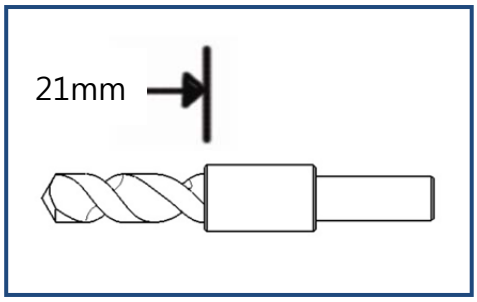

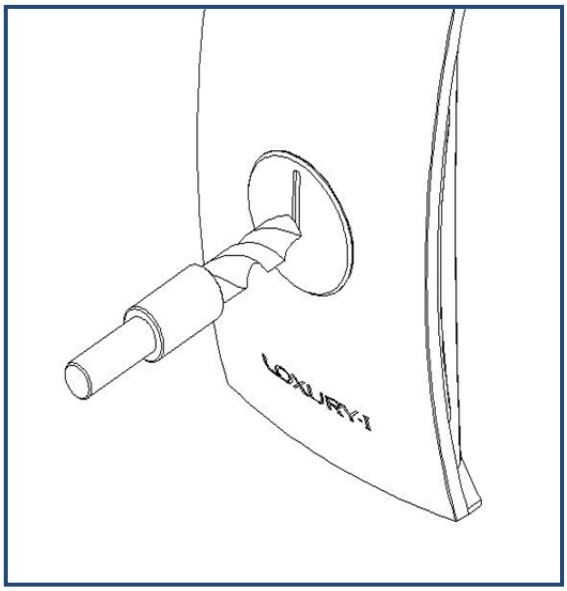

2. Insert "+" driver into the hole and turn to clockwise until the inside locking lever released for opening the lock.

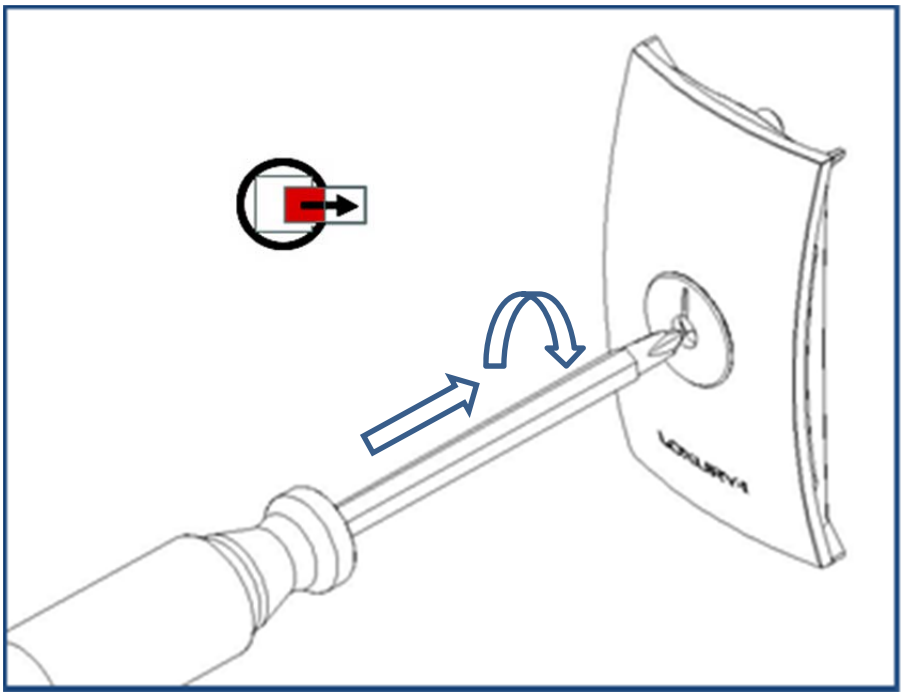

- Return the broken front back to Unilock or our dealer for replacing.

FCC Information to User

This equipment has been tested and found to comply with the limits for a Class B digital device, pursuant to Part 15 of the FCC Rules. These limits are designed to provide reasonable protection against harmful interference in a residential installation. This equipment generates, uses and can radiate radio frequency energy and, if not installed and used in accordance with the instructions, may cause harmful interference to radio communications. However, there is no guarantee that interference will not occur in a particular installation. If this equipment does cause harmful interference to radio or television reception, which can be determined by turning the equipment off and on, the user is encouraged to try to correct the interference by one of the following measures:

• Reorient or relocate the receiving antenna.

• Increase the separation between the equipment and receiver.

• Connect the equipment into an outlet on a circuit different from that to which the receiver is con-nected.

• Consult the dealer or an experienced radio/TV technician for help.

Caution

Modifications not expressly approved by the party responsible for compliance could void the user's authority to operate the equipment.

FCC Compliance Information : This device complies with Part 15 of the FCC Rules. Operation is subject to the following two conditions: (1) This device may not cause harmful interference, and (2) this device must accept any interference received, including interference that may cause undesired operation

IMPORTANT NOTE:

FCC RF Radiation Exposure Statement:

This equipment complies with FCC RF radiation exposure limits set forth for an uncontrolled environment. This equipment should be installed and operated with a minimum distance of 20 centimeters between the radiator and your body.This transmitter must not be co-located or operating in conjunction with any other antenna or transmitter.

IMPORTANT Safety Instruction:

CAUTION

To reduce the risk of electric shock, do not remove the top cover (or the rear section).
No user serviceable parts inside, refer servicing to qualified personnel.

This symbol, wherever it appears, alerts you to the presence of uninsulated dangerous voltage inside the enclosure-voltage that may be sufficient to constitute a risk of sock.

This symbol, wherever it appears, alerts you to the important operating and maintenance instructions in the accompanying literature. Please read the manual.

1) Read these instructions.

2) Keep these instructions.

3) Heed all warnings.

4) Follow all instructions.

5) Do not use this equipment near water.

6) Do not using near any heat sources such as radiators, heat resisters, stove, or other equipment that produce heat.

CAUTION
RISK OF EXPLOSION IF BATTERY IS REPLACED BY AN INCORRECT TYPE.
DISPOSE OF USED BATTERIES ACCORDING TO THE INSTRUCTIONS

CONTACT INFORMATION

Manufacturer Address : 1409 Mega Bldg., SK n Techno Park, 190-1 Sangdaewon-dong, Jungwon-gu, Seongnam, Gyeonggi-do, South Korea

To locate in-country Unilock Co., Ltd. distributors of the LL83AR,
please refer to the Unilock Co., Ltd. Website http://www.unilock.co.kr/
These distributor(s) represent local contacts for this product.

CORPORATE HEADQUARTERS:

Unilock Co., Ltd.

1409 Mega Bldg., SK n Techno Park, 190-1 Sangdaewon-dong, Jungwon-gu, Seongnam, Gyeonggi-do, South Korea

Tel: +82-31-776-3525
Fax: +82-31-776-3526
Web: http://www.unilock.co.kr/

EUROPEAN UNION "DECLARATION OF CONFORMITY"

DECLARATION OF CONFORMITY

Unilock Co., Ltd.
1409 Mega Bldg., SK n Techno Park, 190-1 Sangdaewon-dong, Jungwon-gu, Seongnam, Gyeonggi-do, South Korea

declare under our sole responsibility that the product(s)

LOXURY-I – LL83AR

to which this declaration relate(s) is in conformance with the following standards:

EN 60950-1:2006/A11:2009/A1:2010/A12:2011/A2:2013
EN 301 489-1 V1.9.2:2011
EN 301 489-3 V1.6.1:2013
EN 300 330-1 V1.7.1:2010
EN 300 330-2 V1.5.1:2010

following the provisions of the 1999/5/EC Directives.

[END]