REVISIONS					
REV	ECO NO.	ZONE	DESCRIPTION	DATE	APPROVED
A	463	_	RELEASE TO PRODUCTION.	5/18/06	BS
B	504	_	LOWERED POWER LEVEL OF TRANSMITTER UPDATED FCC ID INFO.	11/25/14	BS

Function Descriptions

1) press key 1 to turn relay 1 on
it will turn relay 1 off if press key1 again

2) press key 2 to turn relay 2 on
it will turn relay 2 off if press key2 again

3) press key 3 to turn relay 1&2 on
it will turn relay 1&2 off if press key3 again

Design Specifications

1)Remote Unit

.Similar system 6000
.MCU: HT12E
.membrane key 1~6
.I.D Code : 2^4 =16 by DIP Switch
.Tx Frequency: 915MHz
.MOD Type : ASK
.LED active indication

General specification

. Frequency: 915MHz
. Modulation Type: ASK
. Remote Control Distance : 75ft
. Input Voltage : TX: 9V Carbon Znic / GP 1604G
: Controller: AC 110V/60Hz Transformer
. Current Drain : Active current < 25mA
: Standby current <10uA
. Wet protect

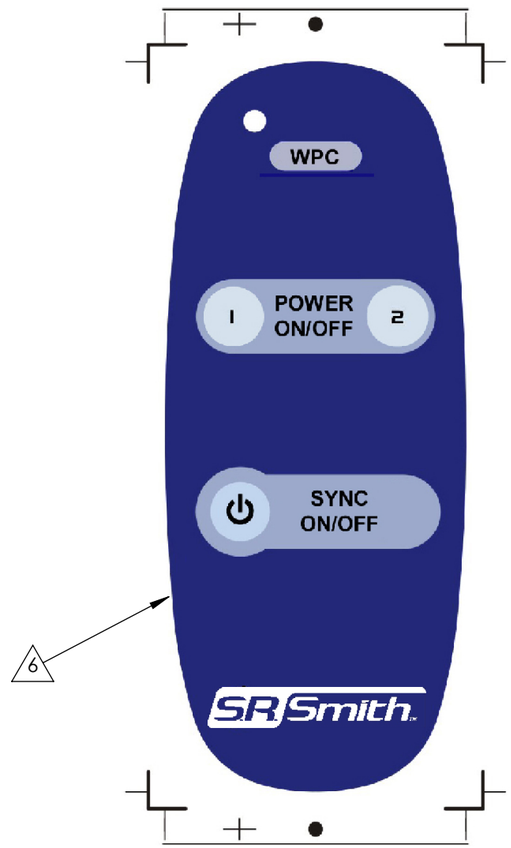

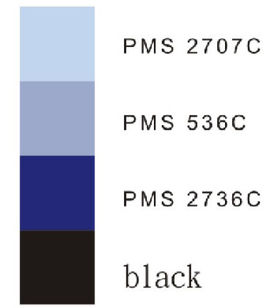

NOTES: UNLESS OTHERWISE SPECIFIED.
1. USE MANUFACTURER (LEI CHUANG COMPOUND CO., LTD) COLOR SYSTEM OR EQUIVALENT.
2. COLOR TO BE BLACK OR EQUIVALENT.
3. REMOTE CONTROL TO BE ASSEMBLED BY VENDOR USING STAINLESS STEEL SCREWS.
4. 9V BATTERY TO BE INCLUDED WITH EVERY REMOTE.
5. PCB MUST HAVE CONFORMAL COATING.
6. SECURELY AFFIX LABEL 70-15286-XX FOR APPROPRIATE PRODUCT (SEE CHART), TO ANY FREE SPACE ON REMOTE SURFACE

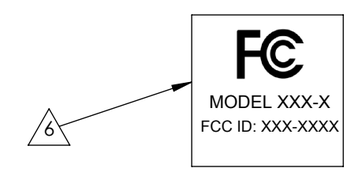

SAMPLE IMAGE ONLY, SEE DRAWING 70-15286-XX

THIRD ANGLE PROJECTION

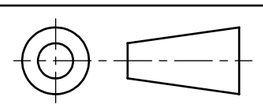

THIS DOCUMENT CONTAINS PROPRIETARY INFORMATION WHICH SHALL NOT BE REPRODUCED, TRANSFERRED TO OTHER DOCUMENTS, DISCLOSED TO OTHERS, USED FOR MANUFACTURING OR ANY OTHER PURPOSE WITHOUT PRIOR AUTHORIZATION OF S.R. SMITH, INC.

NEXT ASSY	USED ON
APPLICATION	

UNLESS OTHERWISE SPECIFIED DIMENSIONS ARE IN MM.
TOLERANCES ARE:
FRACTIONS ± — DECIMALS .XX ±_ .XXX ±_ ANGLES ± 1°

MATERIAL: N/A

FINISH: N/A

DO NOT SCALE DRAWING

APPROVALS		DATES
DRAWN BY:	A. KIM	09/23/05
PROJECT ENGR:	JN	8/1/07
DIR. ENGR:	RB	8/23/07
V.P. MFG:	HLS	8/23/07
PURCHASING MGR:	CV	8/23/07
Q.C. MGR:	HS FRO DJ	8/27/07
SAFETY SPECIALIST:	_	_

SR Smith

TRANSMITTER,WPC

SIZE	UL FILE NO.:	DWG NO.:	REV.
B	-	94-15253-00	B

SCALE= 1:1 MODIFIED BY: K.MARTIN 5/12/14 SHEET 1 OF 4

FCC version note :
Change resistor R4 from 330 ohm to 2.1k
Change Capacitance C6 from 3.3pF to 1.5pF
Change Capacitance C2 from 10nF to 0.1uF

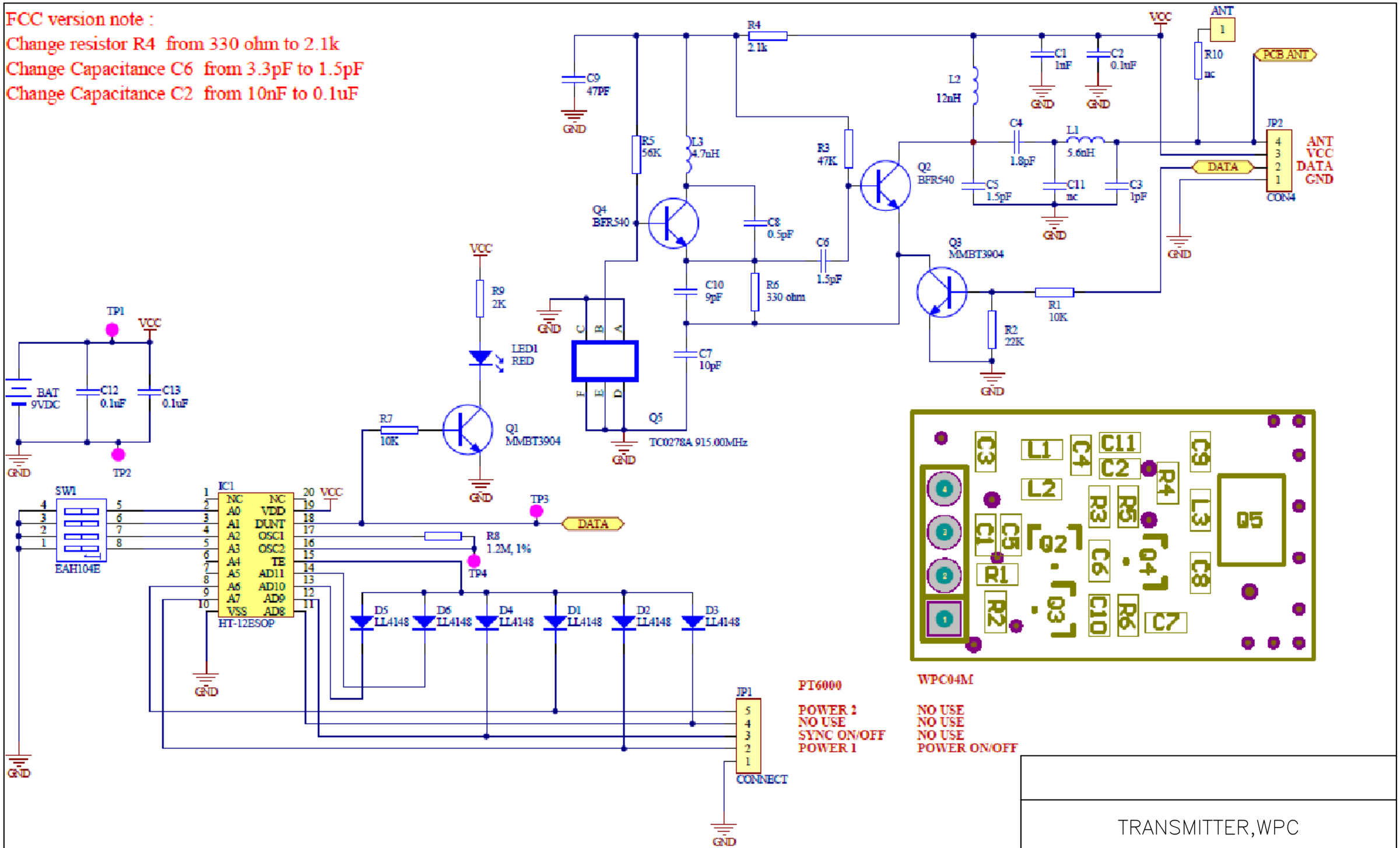

TRANSMITTER,WPC

SIZE	UL FILE NO.:	DWG NO.:	REV.
B	-	94-15253-00	B
SCALE= NTS	MODIFIED BY: K.MARTIN	5/12/14	SHEET 2 OF 4

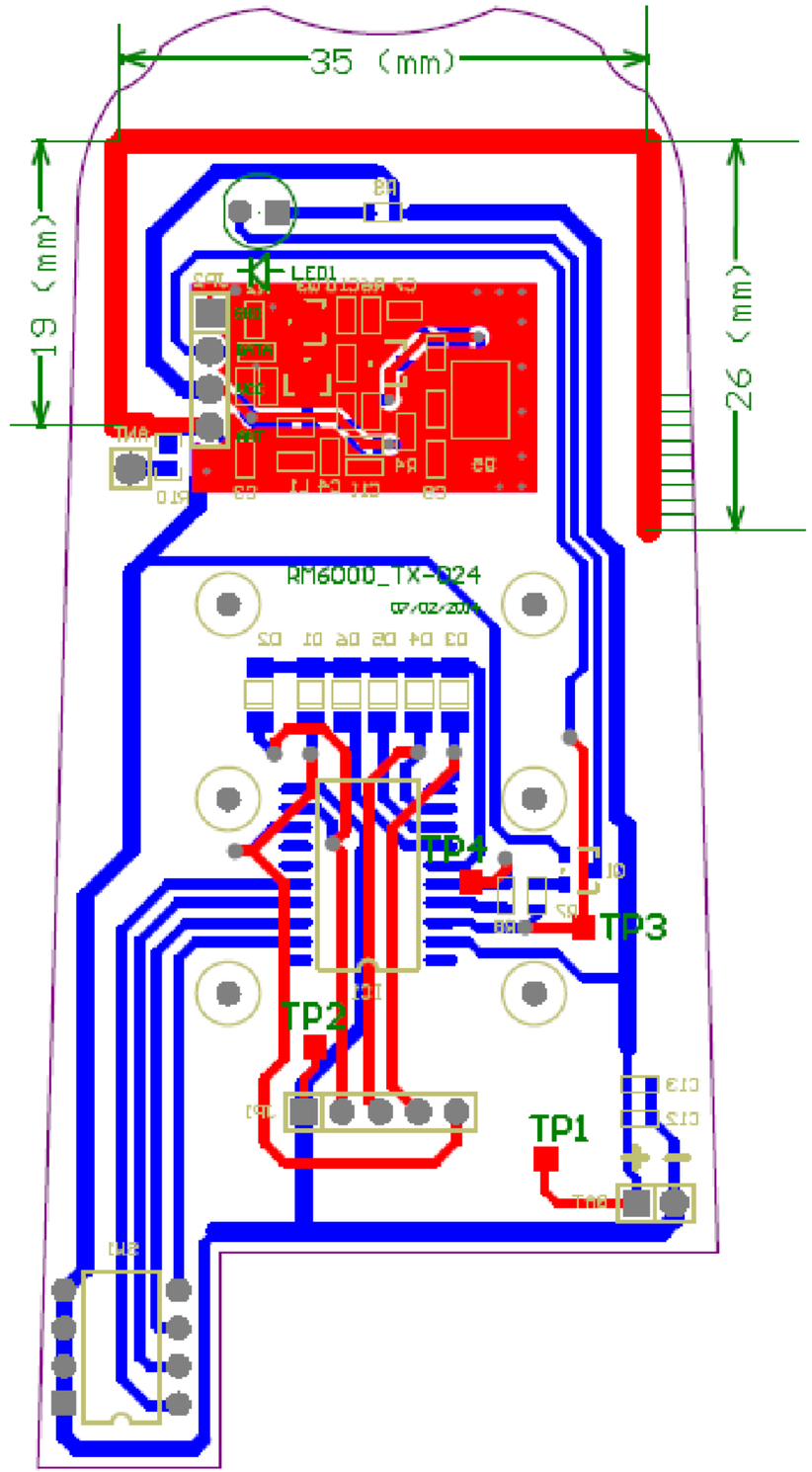

SR Smith

TRANSMITTER,WPC

SIZE	UL FILE NO.:	DWG NO.:	REV.
B	-	94-15253-00	B

SCALE= NTS	MODIFIED BY: K.MARTIN	5/12/14	SHEET 3 OF 4

ITEM	ALT.	ITEM DESCRIPTION	MFG	MFG P/N	QTY	REF DESIGNATOR
0001		DIP SW., LOW PROFILE ACTUATOR, 4PST TOP	百容	EAH104EZ	1	SW1
0002		BATTERY., 9V P/N: BS-IC	常利	BS-IC	1	BAT
0003		LED.,3mm RND, BRIGHT RED DIFF,	EVERLIGHT	EL-204HD	1	LED1
0004		PIN HEADER.,5PIN 1*5 P/N:PHSR05G10	GTK	PHSR05G10	1	JP1
0005		PCB RM6000TX-024 2層板無鉛噴錫			1	
0006	(S)	CAP., 0.1UF/50V/X7R/K 0603	MURATA	GRM188R71H104KA93D	3	C12,C13,C2
0006	(M)	CAP., 0.1UF/50V/X7R/K 0603	TDK	C1608X7R1H104KT	3	C12,C13,C2
0007		CAP.1.8PF/50V/COG/C 0603	TDK	C1608C0G1H1R8CT	1	C4
0008	(S)	CAP., 1000PF/50V/NPO/J 0603	MURATA	GRM1885C1H102JA01D	1	C1
0008	(M)	CAP., 1000PF/50V/NPO/J 0603	TDK	C1608COG1H102JT	1	C1
0009	(S)	RES. 1% 2.1K 0603 ,CHIP	PHYCOMP	2322 704 62102L	1	R4
0009	(S)	RES. 1% 2.1K 0603 ,CHIP	VIKING	CR-03FL7---2K1	1	R4
0009	(M)	RES. 1% 2.1K 0603 ,CHIP	WALSIN	WR06X2101FTL	1	R4
0009	(S)	RES. 1% 2.1K 0603 ,CHIP	YAGEO	RC0603FR-O72K1L	1	R4
0010	(M)	CAP. .1PF /50V/NOP/C/0603	TDK	C1608C0G1H010CT	1	C3
0010	(S)	CAP. .1PF /50V/NOP/C/0603	MURATA'	GRM1885C1H1R0CA01D	1	C3
0011	(S)	CAP., 47PF/50V/NPO/J 0603	MURATA	GRM1885C1H470JA01D	1	C9
0011	(M)	CAP., 47PF/50V/NPO/J 0603	TDK	C1608COG1H470JT	1	C9
0012	(S)	CAP. 1.5PF/50V/NPO/C 0603	MURATA	GRM1885C1H1R5CA01D	2	C5,C6
0012	(M)	CAP. 1.5PF/50V/NPO/C 0603	TDK	C1608COG1H1R5C	2	C5,C6
0013		IC., 20 PIN, P/N:HT12E-2 20SOP	HOLTEK	HT12E-2	1	IC1
0014	(S)	RES. 5% 10K 0603,CHIP	YAGEO	RC0603JR-0710KL	2	R7,R1
0014	(S)	RES. 5% 10K 0603,CHIP	VIKING	CR-03JL7---10K	2	R7,R1
0014	(M)	RES. 5% 10K 0603,CHIP	WALSIN	WR06X103JTL	2	R7,R1
0018	(M)	RES. 5% 2K 0603 ,CHIP	WALSIN	WR06X202JTL	1	R9
0018	(S)	RES. 5% 2K 0603 ,CHIP	YAGEO	RC0603JR-072KL	1	R9
0018	(S)	RES. 5% 2K 0603 ,CHIP	VIKING	CR-03JL7----2K	1	R9
0019	(M)	RES. 1% 1.2M 0603,CHIP	WALSIN	WR06X1204FTL (	1	R8
0019	(S)	RES. 1% 1.2M 0603,CHIP	YAGEO	RC0603FR-071M2L	1	R8
0019	(S)	RES. 1% 1.2M 0603,CHIP	VIKING	CR-03FL7---1M2	1	R8
0020	(S)	RES. 5% 47K 0603 ,CHIP	YAGEO	RC0603JR-0747KL	1	R3
0020	(M)	RES. 5% 47K 0603 ,CHIP	WALSIN	WR06X473JTL	1	R3
0020	(S)	RES. 5% 47K 0603 ,CHIP	VIKING	CR-03JL7---47K	1	R3
0021	(S)	RES. 5% 56K 0603 ,CHIP	YAGEO	RC0603JR-0756KL	1	R5

ITEM	ALT.	ITEM DESCRIPTION	MFG	MFG P/N	QTY	REF DESIGNATOR
0021	(S)	RES. 5% 56K 0603 ,CHIP	VIKING	CR-03JL7---56K	1	R5
0021	(M)	RES. 5% 56K 0603 ,CHIP	WALSIN	WR06X563JTL	1	R5
0022	(S)	RES. 5% 330E 0603,CHIP	YAGEO	RC0603JR-07330RL	1	R6
0022	(M)	RES. 5% 330E 0603,CHIP	WALSIN	WR06X331JTL	1	R6
0022	(S)	RES. 5% 330E 0603,CHIP	VIKING	CR-03JL7--330R	1	R6
0023	(S)	RES. 5% 22K 0603 ,CHIP	YAGEO	RC0603JR-0722KL	1	R2
0023	(S)	RES. 5% 22K 0603 ,CHIP	VIKING	CR-03JL7---22K	1	R2
0023	(M)	RES. 5% 22K 0603 ,CHIP	WALSIN	WR06X223JTL	1	R2
0024	(M)	TRANSISTOR., P/N:MMBT3904-7-F (DIODES)	DIDOES	MMBT3904-7-F	2	Q1,Q3
0024	(S)	TRANSISTOR SOT-23 P/N:MMBT3904LT1G (ON)	ON	MMBT3904LT1G	2	Q1,Q3
0024	(S)	TRANSISTOR., P/N:MMBT3904LT1G (WILLAS)	WILLAS	MMBT3904LT1G	2	Q1,Q3
0024	(S)	TRANSISTOR., P/N:MMBT3904-TP (MICRO)	MICRO COMMERCIAL	MMBT3904-TP	2	Q1,Q3
0025		TRANS NPN 120MA 15V 9GHZ SOT23	NXP	BFR540,215	2	Q2,Q4
0026	(S)	DIODE.,75V/500mW, P/N:LL4148 (PANJIT) MI	PANJIT	LL4148	4	D1-D4
0026	(M)	DIODE.,75V/500mW, P/N:LL4148 (DACO)	DACO	LL4148	4	D1-D4
0026	(S)	DIODE.,75V/500mW, P/N:LL4148-13 (DIODES)	DIODES	LL4148-13	4	D1-D4
0026	(S)	DIODE.,75V/500mW, P/N:LL4148 (GD)	GD	LL4148	4	D1-D4
0026	(S)	DIODE.,75V/500mW, P/N:LL4148-GS (VISHAY)	VISHAY	LL4148-GS18	4	D1-D4
0027		IND.,5%,12nH, 0603, CHIP (TDK)	TDK	MLG1608B12NJ	1	L2
0028		IND.,0.5%,5.6nH, 0603, CHIP (TDK)	TDK	MLG1608B5N6D	1	L1
0029	(S)	CAP. 9PF/50V/NPO/C 0603	TDK	C1608C0G1H090C080AA	1	C10
0029	(M)	CAP. 9PF/50V/NPO/D 0603	TDK	C1608C0G1H090D080AA	1	C10
0030		SAW Resonator., 915.00 MHz, (TC0278A)	TAI SAW	W915.00TC0278A	1	Q5
0031		IND.±0.3nH,4.7nH, 0603, CHIP	TDK	MLG1608B4N7S	1	L3
0032		CAP., 10PF/50V/NPO/C, 0603	TDK	C1608COG1H100CT	1	C7
0033		CAP. 0.5PF/50V/NPO/C 0603	TDK	C1608COG1H0R5C	1	C8

SR Smith

TRANSMITTER,WPC

SIZE	UL FILE NO.:	DWG NO.:	REV.
B		94-15253-00	B

SCALE= NTS	MODIFIED BY: K.MARTIN	5/12/14	SHEET 4 OF 4