RF-BM-2642B1 SimpleLink™

Bluetooth® 5 Low Energy Wireless Module

Version 1.0

Shenzhen RF-star Technology Co., Ltd.

Jan. 19th, 2020

TI CC264X BLE Module List

Chipset	Core	Flash (Byte)	RAM (KB)	TX Power (dBm)	Model	Antenna	Dimension (mm)	Range (M)	Photo
CC2640 R2FRSM	M3	128	28	2	RF-BM-4044B2	PCB	11.2 × 16.6	300	
					RF-BM-4044B3	IPEX	11.2 × 15.2	500	
					RF-BM-4044B4	CHIP	8 × 8	150	
CC2640 R2FRGZ	M3	128	28	5	RF-BM-4077B1	PCB	17 × 23.5	500	
CC2640 R2FRGZ – Q1					RF-BM-4077B2	PCB	17 × 23.5	500	
CC2642R	M4F	352	80	5	RF-BM-2642B1	PCB	17 × 23.5	500	
CC2652R	M4F	352	80	5	RF-BM-2652B1	PCB	17 × 23.5	BLE: 500 ZigBee: 300	
CC1352R	M4F	352	80	5 / 14	RF-TI1352B1	IPEX	16.8 × 26.5	BLE: 500 ZigBee: 300 868 MHz: 1500	

Note:

1. The communication distance is the longest distance obtained by testing the module's maximum transmission power in an open and interference-free environment in sunny weather.
2. Click the picture to buy modules.

1 Device Overview

1.1 Description

RF-BM-2642B1 is an RF module based on TI lower-power CC2642R SoC. It integrates a 48 MHz crystal and a 32.768 kHz crystal, 352 KB of in-system Programmable Flash, 256 KB ROM, 8 KB of cache SRAM, 80 KB of ultra-low leakage SRAM. Its ARM® Cortex®-M4F core application processor can operate at an extremely low current at flexible power modes. Its 2.4 GHz RF transceiver compatible with Bluetooth 5 Low Energy. It features small size, robust connection distance, and rigid reliability.

1.2 Key Features

- RF Section
  - 2.4GHz RF transceiver compatible with Bluetooth 5 Low Energy
  - Excellent receiver sensitivity
    - ✧ -105 dBm for BLE 125 kbps (LE coded PHY)
    - ✧ -97 dBm for 1 Mbps PHY
  - Output power up to +5 dBm with temperature compensation
  - Suitable for systems targeting compliance with worldwide radio frequency regulations
- Microcontroller
  - Powerful 48 MHz ARM® Cortex®-M4F processor
  - EEBMC CoreMark® score: 148
  - 352 KB of in-system programmable flash
  - 256 KB of ROM for protocols and library functions
  - 8 KB of cache SRAM
  - 80 KB of ultra-low leakage SRAM
  - Support OTA upgrade
- Ultra-low power sensor controller with 4 KB of SRAM
  - Sample, store, and process sensor data
  - Operation independent from system CPU
  - Fast wake-up for low-power operation
- Peripherals
  - Digital peripheral pins can be routed to 31 GPIOs
  - 4 × 32-bit or 8 × 16-bit general-purpose timers
  - 12-bit ADC, 200 ksamples/s, 8 channels
  - 2 × comparators with internal reference DAC
  - Ultra-low power analog comparator
  - Programmable current source
  - 2 × UART
  - 2 × SSI (SPI, Microwave, TI)
  - I^2C
  - I^2S
  - Real-time clock (RTC)
  - AES 128 and 256 bit Crypto accelerator
  - ECC and RSA public key hardware accelerator
  - SHA2 accelerator (full suite up to SHA-512)
  - True random number generator (TRNG)
  - Capacitive sensing, up to 8 channels
  - Integrated temperature and battery monitor
- External system
  - On-chip buck DC/DC converter
- Low Power
  - Wide supply voltage range: 1.8 V ~ 3.8 V
  - Active-mode RX: 6.9 mA
  - Active-mode TX at 0 dBm: 7.3 mA
  - Active-mode TX at +5 dBm: 9.6 mA
  - Active-mode MCU 48 MHz (CoreMark): 3.4 mA (71 μA/MHz)
  - Sensor controller, low power-mode, 2 MHz, running infinite loop: 30.8 μA
  - Sensor controller, active-mode, 24 MHz, running infinite loop: 808 μA

- Standby: 0.94 µA (RTC on, 80 KB RAM and CPU retention)
- Shutdown: 150 nA (wakeup on external events)

1.3 Applications

- Personal electronics
- Mobile phone accessories
- Sports and fitness equipment
- HID applications
- Smart grid and automatic meter reading
- Wireless sensor networks
- Active RFID
- Energy harvesting applications
- Electronic Shelf Label (ESL)
- Home and building automation
- Wireless alarm and security systems
- Long-range sensor applications

1.4 Functional Block Diagram

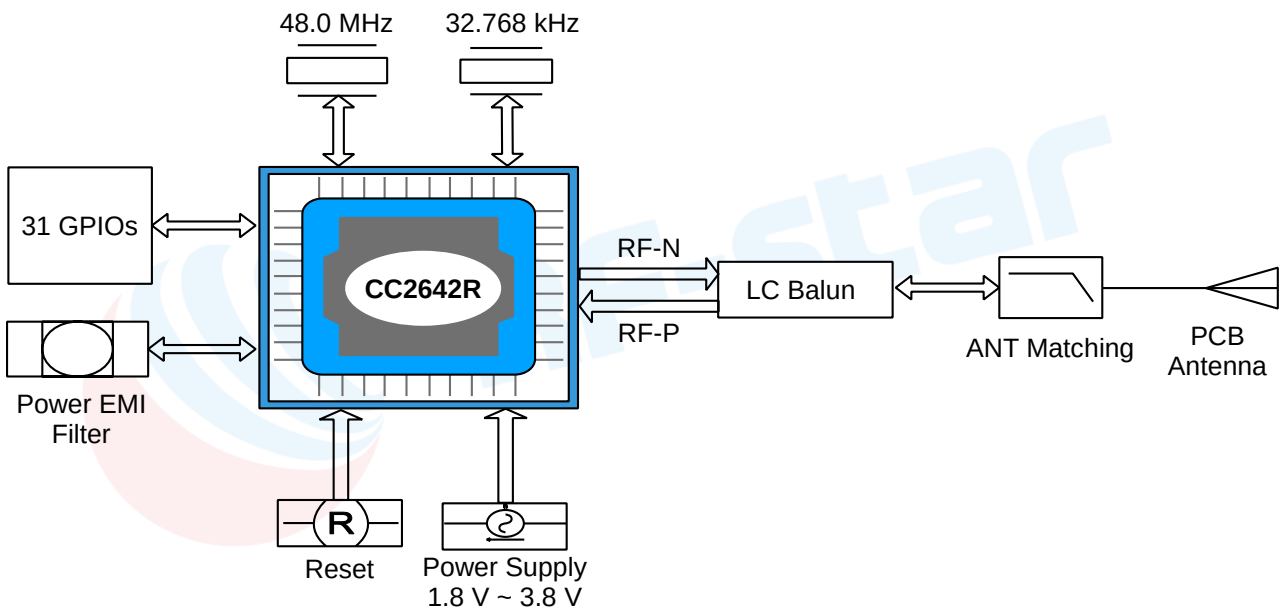

Figure 1. Functional Block Diagram of RF-BM-2642B1

1.5 Part Number Conventions

The part numbers are of the form of RF-BM-2642B1 where the fields are defined as follows:

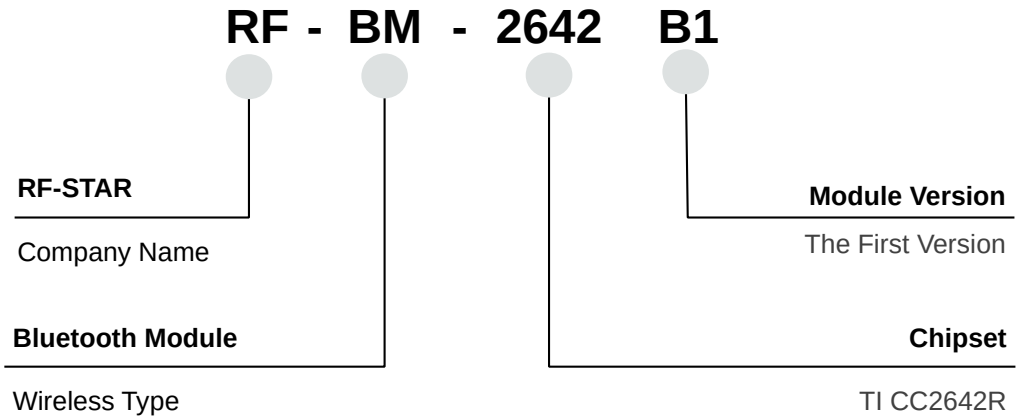

Figure 2. Part Number Conventions of RF-BM-2642B1

Table of Contents

TI CC264X BLE Module List 2
1 Device Overview 3
1.1 Description 3
1.2 Key Features 3
1.3 Applications 4
1.4 Functional Block Diagram 4
1.5 Part Number Conventions 4
Table of Contents 5
Table of Figures 6
Table of Tables 6
2 Module Configuration and Functions 7
2.1 Module Parameters 7
2.2 Module Pin Diagram 8
2.3 Pin Functions 8
3 Specifications 10
3.1 Recommended Operating Conditions 10
3.2 Handling Ratings 10
3.3 Power Consumption 10
3.3.1 Power Mode 10
3.3.2 Radio Mode 12
4 Application, Implementation, and Layout 13
4.1 Module Photos 13
4.2 Recommended PCB Footprint 13
4.3 Schematic Diagram 14
4.4 Basic Operation of Hardware Design 14
4.5 Trouble Shooting 16
4.5.1 Unsatisfactory Transmission Distance 16
4.5.2 Vulnerable Module 16
4.5.3 High Bit Error Rate 16
4.6 Electrostatics Discharge Warnings 16

4.7 Soldering and Reflow Condition 17
4.8 Optional Packaging 18
5 Revision History 19
6 Contact Us 20

Table of Figures

Figure 1. Functional Block Diagram of RF-BM-2642B1 4
Figure 2. Part Number Conventions of RF-BM-2642B1 4
Figure 3. Pin Diagram of RF-BM-2642B1 8
Figure 4. Recommendation of Antenna Layout 15
Figure 5. Optional Packaging Mode 18

Table of Tables

Table 1. Parameters of RF-BM-2642B1 7
Table 2. Pin Functions of RF-BM-2642B1 8
Table 3. Recommended Operating Conditions of RF-BM-2642B1 10
Table 4. Handling Ratings of RF-BM-2642B1 10
Table 5. Table of Power Consumption on Power Mode 10
Table 6. Table of Power Consumption on Radio Mode 12

2 Module Configuration and Functions

2.1 Module Parameters

Table 1. Parameters of RF-BM-2642B1

Chipset	CC2642R
Supply Power Voltage	1.8 V ~ 3.8 V, recommended to 3.3 V
Frequency	2402 MHz ~ 2480 MHz
Maximum Transmit Power	+5.0 dBm
Receiving Sensitivity	-97 dBm
GPIO	31
Power Consumption	RX current: 6.9 mA TX current: 7.3 mA @ 0 dBm 9.6 mA @ 5 dBm MCU 48 MHz (CoreMark):3.4 mA (71 μA/MHz) Sensor Controller：30.8 μA @ low power-mode, 2 MHz 808 μA @ active-mode, 24 MHz Standby: 0.94 μA Shutdown: 150 nA
Support Protocol	Bluetooth 5 Low Energy
Crystal	48 MHz, 32.768 kHz
Package	SMT packaging (Half hole)
Communication Interface	UART, SPI, I^2C, I^2S
Dimension	23.50 mm × 17.0 mm × (2.2 ± 0.1) mm
Type of Antenna	PCB Antenna
Operating Temperature	-40 ℃ ~ +85 ℃
Storage Temperature	-40 ℃ ~ +125 ℃

2.2 Module Pin Diagram

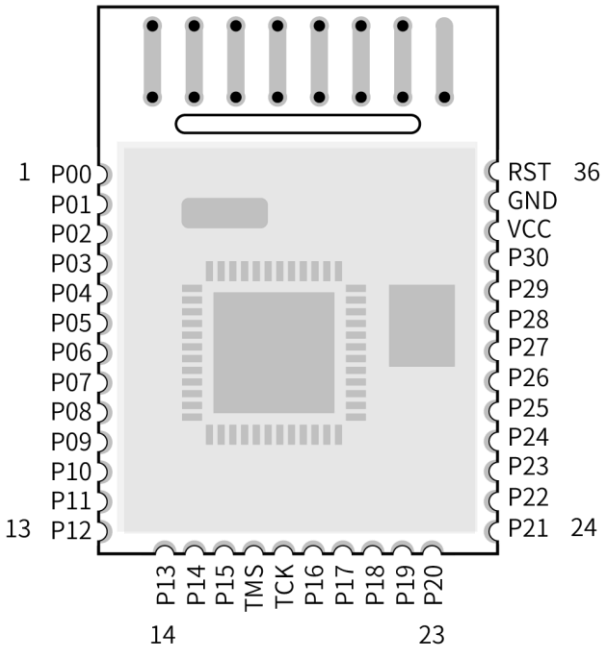

Figure 3. Pin Diagram of RF-BM-2642B1

2.3 Pin Functions

Table 2. Pin Functions of RF-BM-2642B1

Pin	Name	Function	Description
1	P00	GPIO	GPIO, Sensor Controller
2	P01	GPIO	GPIO, Sensor Controller
3	P02	GPIO	GPIO, Sensor Controller
4	P03	GPIO	GPIO, Sensor Controller
5	P04	GPIO	GPIO, Sensor Controller
6	P05	GPIO	GPIO, Sensor Controller, high-drive capability
7	P06	GPIO	GPIO, Sensor Controller, high-drive capability
8	P07	GPIO	GPIO, Sensor Controller, high-drive capability
9	P08	GPIO	GPIO
10	P09	GPIO	GPIO
11	P10	GPIO	GPIO
12	P11	GPIO	GPIO
13	P12	GPIO	GPIO
14	P13	GPIO	GPIO

15	P14	GPIO	GPIO
16	P15	GPIO	GPIO
17	JTAG_TMSC	JTAG_TMSC	JTAG TMSC, high-drive capability
18	JTAG_TCKC	JTAG_TCKC	JTAG TCKC
19	P16	GPIO	GPIO, JTAG_TDO, high-drive capability
20	P17	GPIO	GPIO, JTAG_TDI, high-drive capability
21	P18	GPIO	GPIO
22	P19	GPIO	GPIO
23	P20	GPIO	GPIO
24	P21	GPIO	GPIO
25	P22	GPIO	GPIO
26	P23	GPIO	GPIO, Sensor Controller, Analog
27	P24	GPIO	GPIO, Sensor Controller, Analog
28	P25	GPIO	GPIO, Sensor Controller, Analog
29	P26	GPIO	GPIO, Sensor Controller, Analog
30	P27	GPIO	GPIO, Sensor Controller, Analog
31	P28	GPIO	GPIO, Sensor Controller, Analog
32	P29	GPIO	GPIO, Sensor Controller, Analog
33	P30	GPIO	GPIO, Sensor Controller, Analog
34	VDD_EB	VDD	Power Supply: 1.8 V ~ 3.8 V, recommend to 3.3 V
35	GND	GND	Ground
36	NRESET	RESET_N	Reset, active-low. No internal pullup

3 Specifications

3.1 Recommended Operating Conditions

Functional operation does not guarantee performance beyond the limits of the conditional parameter values in the table below. Long-term work beyond this limit will affect the reliability of the module more or less.

Table 3. Recommended Operating Conditions of RF-BM-2642B1

Items	Condition	Min.	Typ.	Max.	Unit
Operating Supply Voltage	/	1.8	3.3	3.8	V
Operating Temperature	/	-40	+25	+85	℃

Notes: To ensure the RF performance, the ripple wave on the source must be less than ±300 mV.

3.2 Handling Ratings

Table 4. Handling Ratings of RF-BM-2642B1

Items	Condition	Min.	Typ.	Max.	Unit
Storage Temperature	Tstg	-40	+25	+125	℃
Human Body Model	HBM		±2000		V
Moisture Sensitivity Level			2		
Charged Device Model			±500		V

3.3 Power Consumption

3.3.1 Power Mode

Table 5. Table of Power Consumption on Power Mode

Measured on the RF-BM-2642B1 reference design with Tc = 25°C, VDDS = 3.0 V with internal DC/DC converter, unless otherwise noted.

Parameter		Test Conditions	Typ.	Unit
Core Current Consumption				
I_{core}	Reset and Shutdown	Reset. RESET_N pin asserted or VDDS below power-on-reset threshold	150	nA
		Shutdown. No clocks running, no retention	150	nA
	Standby without cache	RTC running, CPU, 80 KB RAM and (partial) register retention.	0.94	μA

	retention	RCOSC_LF		
		RTC running, CPU, 80 KB RAM and (partial) register retention. XOSC_LF	1.09	μA
	Standby with cache retention	RTC running, CPU, 80 KB RAM and (partial) register retention. RCOSC_LF	3.2	μA
		RTC running, CPU, 80 KB RAM and (partial) register retention. XOSC_LF	3.3	μA
	Idle	Supply Systems and RAM powered RCOSC_HF	675	μA
	Active	MCU running CoreMark at 48 MHz RCOSC_HF	3.39	mA
Peripheral Current Consumption				
I_{peri}	Peripheral power domain	Delta current with domain enabled	97.7	μA
	Serial power domain	Delta current with domain enabled	7.2	μA
	RF Core	Delta current with power domain enabled, clock enabled, RF core idle	210.9	μA
	μDMA	Delta current with clock enabled, module is idle	63.9	μA
	Timer	Delta current with clock enabled, module is idle	81.0	μA
	I2C	Delta current with clock enabled, module is idle	10.1	μA
	I2S	Delta current with clock enabled, module is idle	26.3	μA
	SSI	Delta current with clock enabled, module is idle	82.9	μA
	UART	Delta current with clock enabled, module is idle	167.5	μA
	CRYPTO (AES)	Delta current with clock enabled, module is idle	25.6	μA
	PKA	Delta current with clock enabled, module is idle	84.7	μA
	TRNG	Delta current with clock enabled, module is idle	35.6	μA
Sensor Controller Engine Consumption				
I_{SCE}	Active mode	24 MHz, Infinite loop	808.5	μA
	Low-power mode	2 MHz, Infinite loop	30.1	μA

3.3.2 Radio Mode

Table 6. Table of Power Consumption on Radio Mode

Measured on the RF-BM-2642B1 reference design with Tc = 25°C, VDDS = 3.0 V with internal DC/DC converter, unless otherwise noted.

Parameter	Test Conditions	Typ.	Unit
Radio Receive Current	2440 MHz	6.9	mA
Radio Transmit Current	+5 dBm output power setting 2440 MHz	7.3	mA
	+5 dBm output power setting 2440 MHz	9.6	mA

4 Application, Implementation, and Layout

4.1 Module Photos

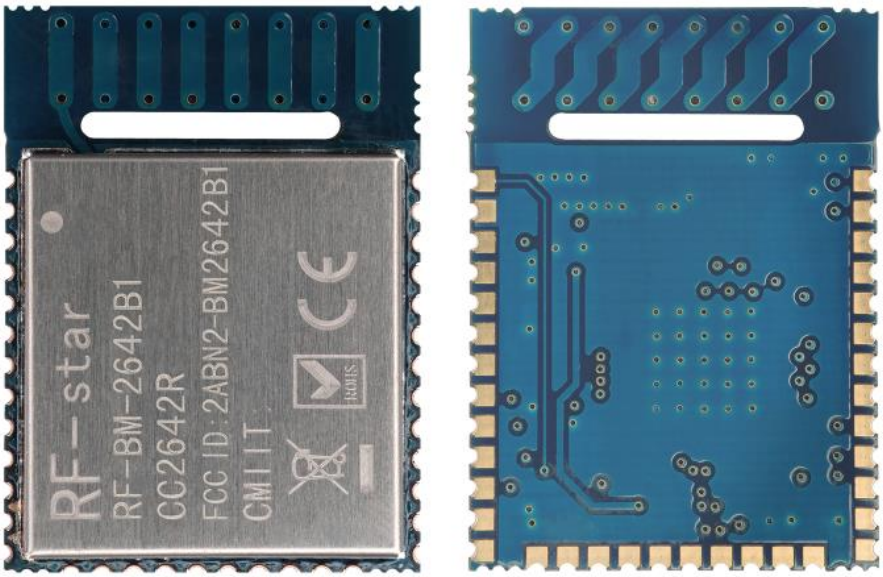

Figure 3. Photos of RF-BM-2642B1

4.2 Recommended PCB Footprint

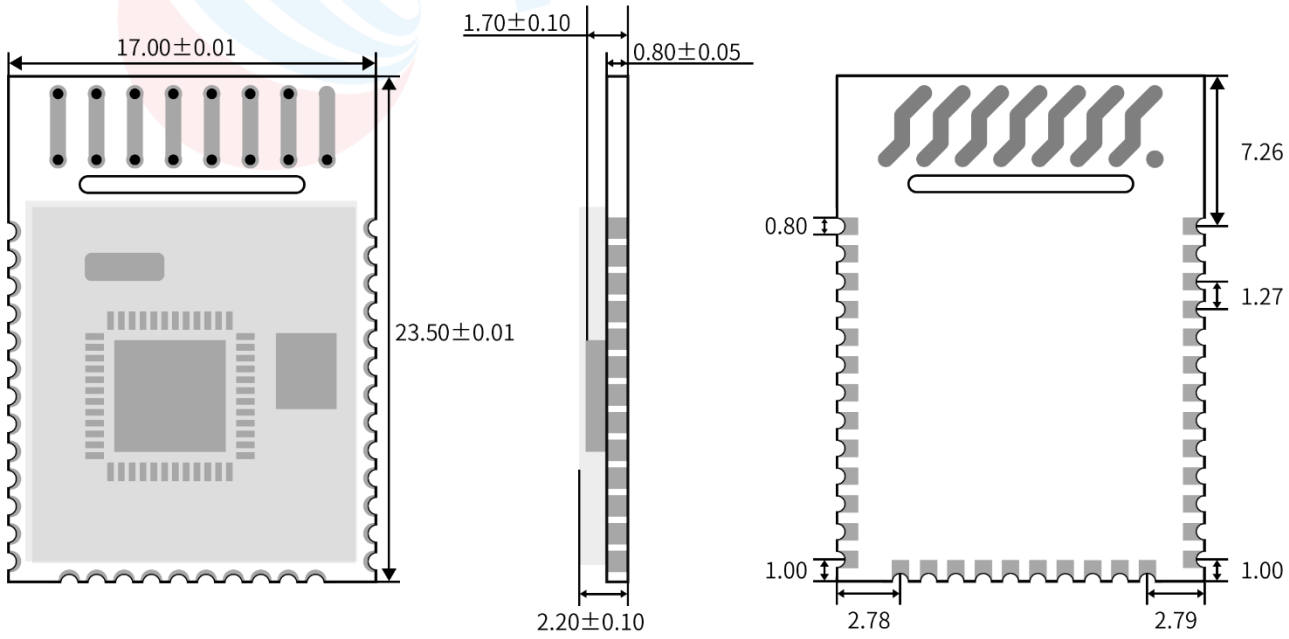

Figure 4. Recommended PCB Footprint of RF-BM-2642B1

4.3 Schematic Diagram

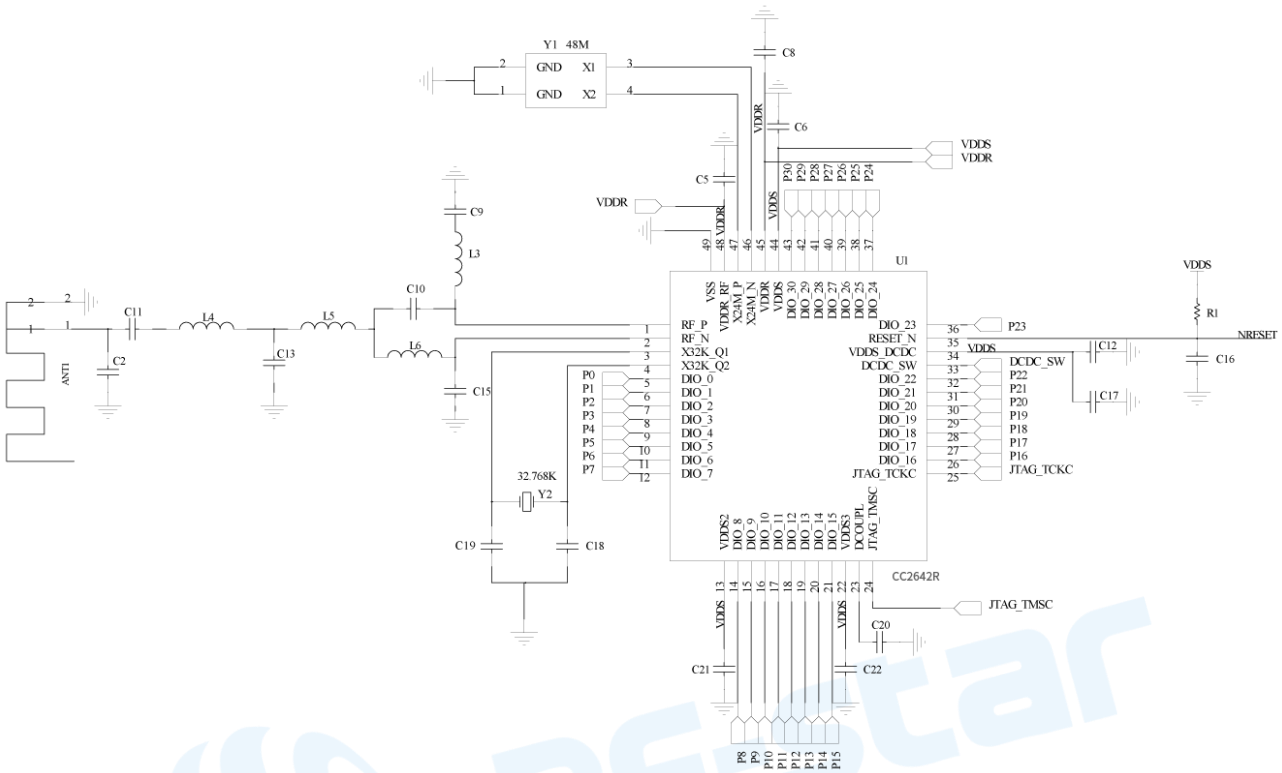

Figure 5. Schematic Diagram of RF-BM-2642B1

4.4 Basic Operation of Hardware Design

1. It is recommended to offer the module with a DC stabilized power supply, a tiny power supply ripple coefficient and the reliable ground. Please pay attention to the correct connection between the positive and negative poles of the power supply. Otherwise, the reverse connection may cause permanent damage to the module;
2. Please ensure the supply voltage is between the recommended values. The module will be permanently damaged if the voltage exceeds the maximum value. Please ensure the stable power supply and no frequently fluctuated voltage.
3. When designing the power supply circuit for the module, it is recommended to reserve more than 30% of the margin, which is beneficial to the long-term stable operation of the whole machine. The module should be far away from the power electromagnetic, transformer, high-frequency wiring and other parts with large electromagnetic interference.
4. The bottom of module should avoid high-frequency digital routing, high-frequency analog routing and power routing. If it has to route the wire on the bottom of module, for example, it is assumed that the module is soldered to the Top Layer, the copper must be spread on the connection part of the top layer and the module, and be close to the digital part of module and routed in the Bottom Layer (all copper is well grounded).
5. Assuming that the module is soldered or placed in the Top Layer, it is also wrong to randomly route the Bottom

Layer or other layers, which will affect the spurs and receiving sensitivity of the module to some degrees;

6. Assuming that there are devices with large electromagnetic interference around the module, which will greatly affect the module performance. It is recommended to stay away from the module according to the strength of the interference. If circumstances permit, appropriate isolation and shielding can be done.
7. Assuming that there are routings of large electromagnetic interference around the module (high-frequency digital, high-frequency analog, power routings), which will also greatly affect the module performance. It is recommended to stay away from the module according to the strength of the interference. If circumstances permit, appropriate isolation and shielding can be done.
8. It is recommended to stay away from the devices whose TTL protocol is the same 2.4 GHz physical layer, for example: USB 3.0.
9. The antenna installation structure has a great influence on the module performance. It is necessary to ensure the antenna is exposed and preferably vertically upward. When the module is installed inside of the case, a high-quality antenna extension wire can be used to extend the antenna to the outside of the case.
10. The antenna must not be installed inside the metal case, which will cause the transmission distance to be greatly weakened.
11. The recommendation of antenna layout.

    The inverted-F antenna position on PCB is free space electromagnetic radiation. The location and layout of antenna is a key factor to increase the data rate and transmission range.

    Therefore, the layout of the module antenna location and routing is recommended as follows:

    （1） Place the antenna on the edge (corner) of the PCB.

    （2） Make sure that there is no signal line or copper foil in each layer below the antenna.

    （3） It is the best to hollow out the red part of the antenna position in the following figure so as to ensure that S11 of the module is minimally affected.

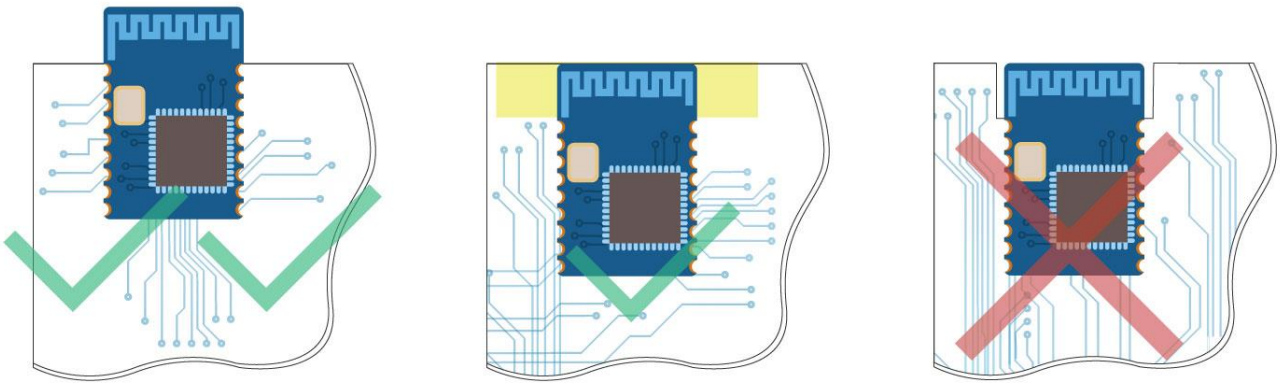

Figure 4. Recommendation of Antenna Layout

Note: The hollow-out position is based on the antenna used.

4.5 Trouble Shooting

4.5.1 Unsatisfactory Transmission Distance

1. When there is a linear communication obstacle, the communication distance will be correspondingly weakened. Temperature, humidity, and co-channel interference will lead to an increase in communication packet loss rate. The performances of ground absorption and reflection of radio waves will be poor, when the module is tested close to the ground.
2. Seawater has a strong ability to absorb radio waves, so the test results by seaside are poor.
3. The signal attenuation will be very obvious, if there is a metal near the antenna or the module is placed inside of the metal shell.
4. The incorrect power register set or the high data rate in an open air may shorten the communication distance. The higher the data rate, the closer the distance.
5. The low voltage of the power supply is lower than the recommended value at ambient temperature, and the lower the voltage, the smaller the power is.
6. The unmatchable antennas and module or the poor quality of antenna will affect the communication distance.

4.5.2 Vulnerable Module

1. Please ensure the supply voltage is between the recommended values. The module will be permanently damaged if the voltage exceeds the maximum value. Please ensure the stable power supply and no frequently fluctuated voltage.
2. Please ensure the anti-static installation and the electrostatic sensitivity of high-frequency devices.
3. Due to some humidity sensitive components, please ensure the suitable humidity during installation and application. If there is no special demand, it is not recommended to use at too high or too low temperature.

4.5.3 High Bit Error Rate

1. There are co-channel signal interferences nearby. It is recommended to be away from the interference sources or modify the frequency and channel to avoid interferences.
2. The unsatisfactory power supply may also cause garbled. It is necessary to ensure the power supply reliability.
3. If the extension wire or feeder wire is of poor quality or too long, the bit error rate will be high.

4.6 Electrostatics Discharge Warnings

The module will be damaged for the discharge of static. RF-star suggest that all modules should follow the 3 precautions below:

1. According to the anti-static measures, bare hands are not allowed to touch modules.

2. Modules must be placed in anti- static areas.
3. Take the anti-static circuitry (when inputting HV or VHF) into consideration in product design.

   Static may result in the degradation in performance of module, even causing the failure.

4.7 Soldering and Reflow Condition

1. Heating method: Conventional Convection or IR/convection.
2. Temperature measurement: Thermocouple d = 0.1 mm to 0.2 mm CA (K) or CC (T) at soldering portion or equivalent methods.
3. Solder paste composition: Sn/3.0 Ag/0.5 Cu
4. Allowable reflow soldering times: 2 times based on the following reflow soldering profile.
5. Temperature profile: Reflow soldering shall be done according to the following temperature profile.
6. Peak temperature: 245 ℃.

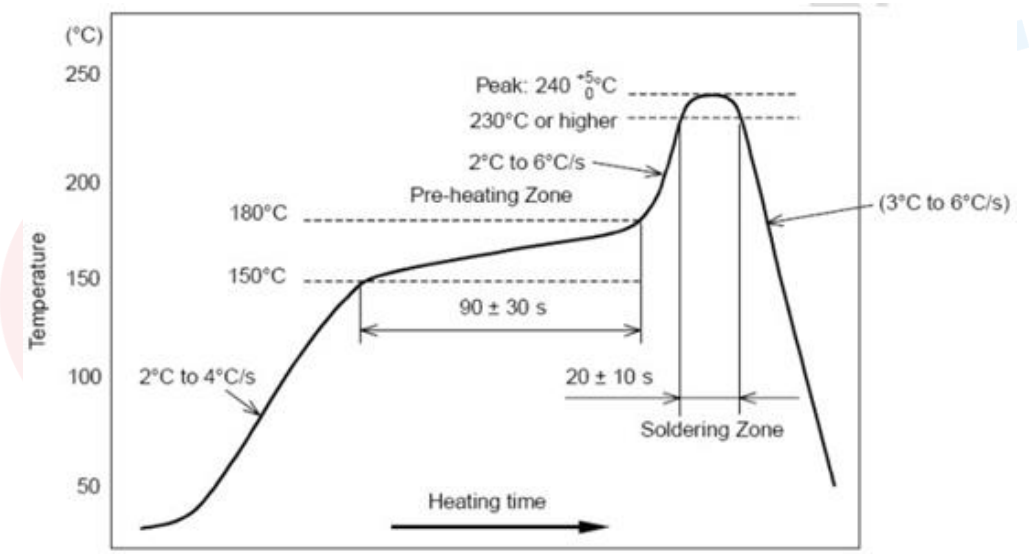

Figure 6. Recommended Reflow for Lead Free Solder

4.8 Optional Packaging

Figure 5. Optional Packaging Mode

Note: Default tray packaging.

5 Revision History

Date	Version No.	Description	Author
2019.09.11	V1.0	The initial version is released.	Aroo Wang
2020.01.19	V1.0	Add TI CC264X BLE module list.	Sunny Li

6 Contact Us

SHENZHEN RF-STAR TECHNOLOGY CO., LTD.

Shenzhen HQ:

Add.: Room 601, Block C, Skyworth Building, High-tech Park, Nanshan District, Shenzhen, Guangdong, China

Tel.: 86-755-3695 3756

Chengdu Branch:

Add.: No. B4-12, Building No.1, No. 1480 Tianfu Road North Section (Incubation Park), High-Tech Zone, Chengdu, China (Sichuan) Free Trade Zone, 610000

Tel.: 86-28-6577 5970

Email: sunny@szrfstar.com, sales@szrfstar.com

Web.: www.szrfstar.com

FCC Statement
FCC standards: FCC CFR Title 47 Part 15 Subpart C Section 15.247
PCB Antenna with Antenna gain：0dBi

This device complies with part 15 of the FCC Rules. Operation is subject to the following two conditions: (1) This device may not cause harmful interference, and (2) this device must accept any interference received, including interference that may cause undesired operation.
Any Changes or modifications not expressly approved by the party responsible for compliance could void the user's authority to operate the equipment.
Note: This equipment has been tested and found to comply with the limits for a Class B digital device, pursuant to part 15 of the FCC Rules. These limits are designed to provide reasonable protection against harmful interference in a residential installation. This equipment generates, uses and can radiate radio frequency energy and, if not installed and used in accordance with the instructions, may cause harmful interference to radio communications. However, there is no guarantee that interference will not occur in a particular installation. If this equipment does cause harmful interference to radio or television reception, which can be determined by turning the equipment off and on, the user is encouraged to try to correct the interference by one or more of the following measures:
—Reorient or relocate the receiving antenna.
—Increase the separation between the equipment and receiver.
—Connect the equipment into an outlet on a circuit different from that to which the receiver is connected.
—Consult the dealer or an experienced radio/TV technician for help.

FCC Radiation Exposure Statement

This modular complies with FCC RF radiation exposure limits set forth for an uncontrolled environment. This transmitter must not be co-located or operating in conjunction with any other antenna or transmitter.

If the FCC identification number is not visible when the module is installed inside another device, then the outside of the device into which the module is installed must also display a label referring to the enclosed module. This exterior label can use wording such as the following: “Contains Transmitter Module FCC ID: 2ABN2-BM2642B1 Or Contains FCC ID: 2ABN2-BM2642B1”
When the module is installed inside another device, the user manual of the host must contain below warning statements;
1. This device complies with Part 15 of the FCC Rules. Operation is subject to the following two conditions:
(1) This device may not cause harmful interference.
(2) This device must accept any interference received, including interference that may cause undesired operation.
Note: This equipment has been tested and found to comply with the limits for a Class B digital device, pursuant to part 15 of the FCC Rules. These limits are designed to provide reasonable protection against harmful interference in a residential installation. This equipment generates, uses and can radiate radio frequency energy and, if not installed and used in accordance with the instructions, may cause harmful interference to radio communications.
However, there is no guarantee that interference will not occur in a particular installation. If this equipment does cause harmful interference to radio or television reception, which can be determined by turning the equipment off and on, the user is encouraged to try to correct the interference by one or more of the following measures:
—Reorient or relocate the receiving antenna.
—Increase the separation between the equipment and receiver.
—Connect the equipment into an outlet on a circuit different from that to which the receiver is connected.
—Consult the dealer or an experienced radio/TV technician for help.
2. Changes or modifications not expressly approved by the party responsible for compliance could void the user's authority to operate the equipment.
The devices must be installed and used in strict accordance with the manufacturer's instructions as described in the user documentation that comes with the product.
Any company of the host device which install this modular with limit modular approval should perform the test of radiated & conducted emission and spurious emission,etc. according to FCC part 15C : 15.247 and 15.209 & 15.207 ,15B Class B requirement, Only if the test result comply with FCC part 15C : 15.247 and 15.209 & 15.207 ,15B Class B requirement， then the host can be sold legally.