RSBRS02ABR-01

Bluetooth 5.0 Low Energy Module

Version 1.0

Shenzhen RF-star Technology Co., Ltd.

Jan. 10th, 2020

1 Device Overview

1.1 Description

RSBRS02ABR-01 is a compact size, cost-effective single-mode Bluetooth low energy module based on RF-star 256 kB flash SoC RS02A1-B chip with super low power consumption (BLE TX: 13.0 mA @ 0 dBm, BLE RX: 12.0 mA), good noise reduction, better sensitivity, robust transmission distance, and high reliability. The module integrates a 16 MHz crystal, an RF matching filter, a power filter, and a meander line inverted-F PCB antenna. It supports BLE stack v5.0 and is preprogrammed with an easy-to-integrate serial interface communication protocol.

1.2 Key Features

- Frequency: 2402 MHz ~ 2480.0 MHz
- BLE
  - Compiles with Bluetooth v5.0 (1/2 Mbps, extended ADV payload)
  - TX: Up to +5 dBm transceiver output power
  - RX: -94 dBm sensitivity @ 1 Mbps
  - Single-pin antenna interface
  - Link layer and AES/CCM integrated
- CPU
  - 32-bit ARM Cortex-M0+ @ 48 MHz
  - Single-cycle multiplier
  - 65 μA/MHz running from SRAM
  - Serial wire debug
- Memory
  - ROM 80 kB
  - SRAM 36 kB, 4 kB Cache
  - Flash 256 kB
  - 32B eFuse
- Power
  - Supply voltage: 2.3 V ~ 3.6 V
  - Hibernation mode (GPIO retention): 2 μA @ 3 V, wakeup by GPIO or RTC
  - Sleep mode (BLE linked, 40 kB SRAM data retention): 5 μA, wakeup by GPIO, RTC or BLE
  - BLE TX: 13.0 mA @ 0 dBm
  - BLE RX: 12.0 mA
- Clock and Timer
  - 16 MHz crystal and RC oscillator
  - 5 x 16 bit timer
  - Real timer clock (RTC)
  - Watchdog
- Peripherals
  - 11 general purpose I/Os. Function IO any-route support
  - 2 x UARTs with CTS/RTS
  - SPI with master/slave configurable
  - I^2C with master/slave configurable
  - 7816 T-0 master interface
  - Keyboard interface
  - 4-channel 9-bit general purpose ADC
  - Infra-red generator
  - 4 x PWM
  - Quadrature decoder (QDEX) interface
  - 12 MHz clock output
  - RSSI (1 dB resolution)
  - 2-channel DMA

1.3 Applications

- Smart toys
- Gaming controller
- E-lock
- Smart lighting

- Electronic shelf label
- Location-based service
- Medical devices
- Fitness equipment
- Environmental sensor nodes
- Passive keyless entry (PKE)
- Phone accessories
- Health-care equipment
- Energy harvesting
- Thermometer
- Human input devices
- Wearable

1.4 Functional Block Diagram

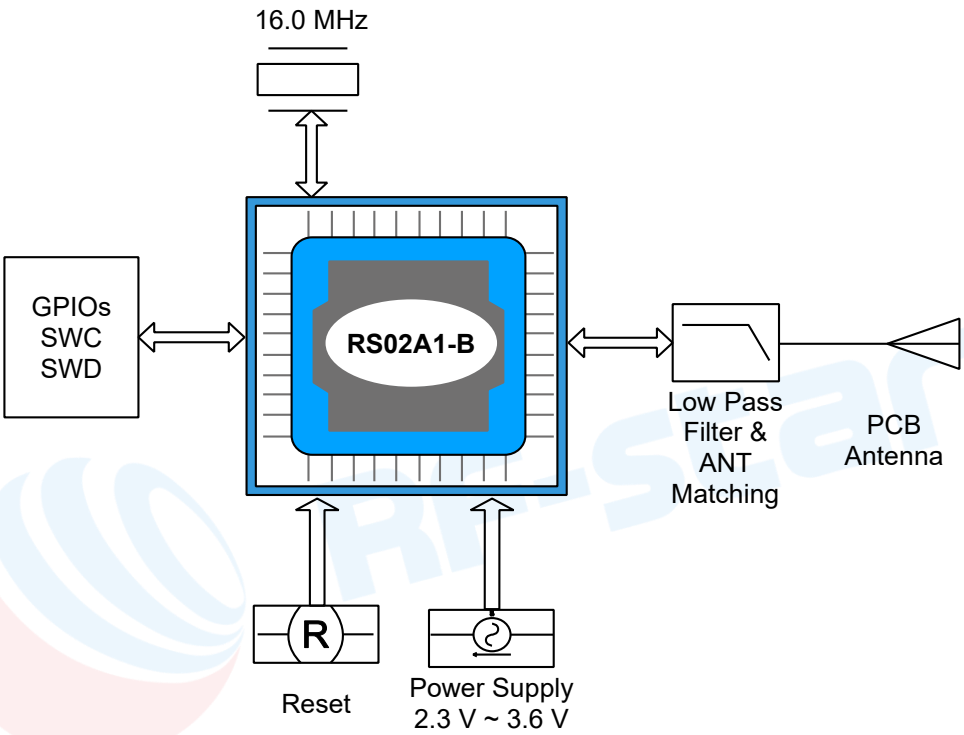

Figure 1. Functional Block Diagram of RSBRS02ABR-01

Table of Contents

RF-star BLE Module List 1
1 Device Overview 2
1.1 Description 2
1.2 Key Features 2
1.3 Applications 2
1.4 Functional Block Diagram 3
Table of Contents 4
2 Module Configuration and Functions 5
2.1 Module Parameter 5
2.2 Module Pin Diagram 6
2.3 Pin Functions 6
3 Specifications 8
3.1 Absolute Maximum Ratings 8
3.2 Handling Ratings 8
4 Application, Implementation, and Layout 8
4.1 Recommended PCB Footprint 8
4.2 Antenna 9
4.2.1 Antenna Design Recommendation 9
4.3 Basic Operation of Hardware Design 9
4.4 Trouble Shooting 10
4.4.1 Unsatisfactory Transmission Distance 10
4.4.2 Vulnerable Module 11
4.4.3 High Bit Error Rate 11
4.5 Electrostatics Discharge Warnings 11
4.6 Soldering and Reflow Condition 11
4.7 Optional Packaging 13
6 Revision History 16
7 Contact Us 16

2 Module Configuration and Functions

2.1 Module Parameter

Table 1. Parameters of RSBRS02ABR-01

Chipset	RS02A1-B
Supply Power Voltage	2.3 V ~ 3.6 V, recommended to 3.3 V
Modulation	GFSK
Frequency	2402 MHz ~ 2480.0 MHz
Transmit Power	-20.0 dBm ~ +5.0 dBm (typical: 0 dBm)
Receiving Sensitivity	-94 dBm
GPIO	11
Crystal	16 MHz
ROM	80 kB
SRAM	36 kB, 4 kB Cache
Flash	256 kB
Package	SMT Packaging
Frequency Error	±20 kHz
Dimension	15.2 mm x 11.2 mm x 1.7 mm
Type of Antenna	PCB Antenna
Operating Temperature	-40 ℃ ~ +85 ℃
Storage Temperature	-40 ℃ ~ +125 ℃
Hibernation Current	5 µA (Test software RS02A1-B-test.hex)
Current of Broadcast Event	90 µA (Broadcast interval: 200 ms @ 0 dBm)
Current of Connection Event	0.35 mA (Connection interval: 20 ms @ 0 dBm)

2.2 Module Pin Diagram

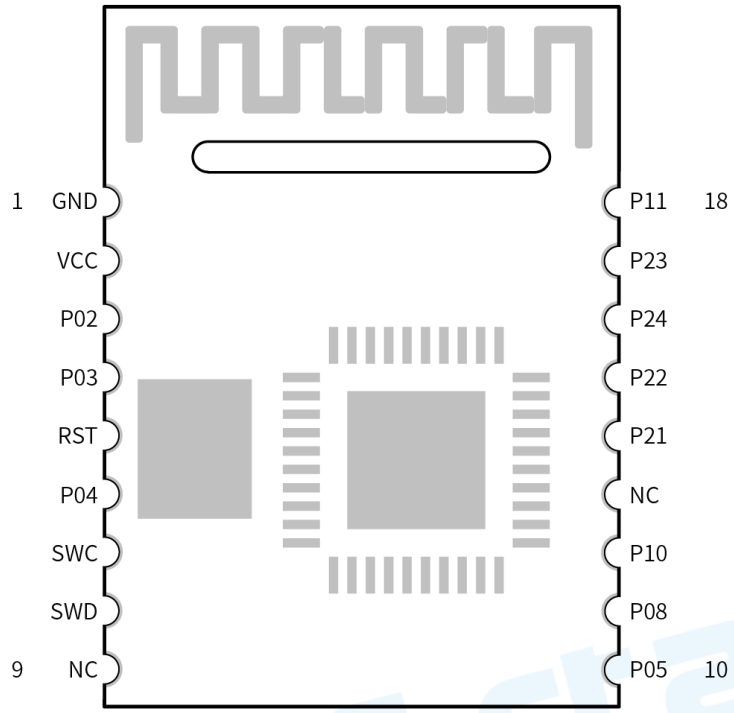

Figure 2. Pin Diagram of RSBRS02ABR-01

2.3 Pin Functions

Table 2. Pin Functions of RSBRS02ABR-01

Pin	Name	Chip Pin	Pin Type	Remarks
1	GND	GND	Ground	Ground
2	VCC	VCC	VCC	Power supply: 2.3 V ~ 3.6 V, Recommended to 3.3 V
3	P02	P02	I/O	
4	P03	P03	I/O	
5	RESET	RESET	RESET	Reset, active low
6	P04	P04	I/O	
7	SWC	SWC	SWCLK	Connect J-Link simulator SWCLK
8	SWD	SWD	SWDIO	Connect J-Link simulator SWDIO
9	NC	NC	NC	
10	P05	P05	I/O	
11	P08	P08	I/O	
12	P10	P10	I/O	
13	NC	NC	NC	

14	P21	P21	I/O	
15	P22	P22	I/O	
16	P24	P24	I/O	
17	P23	P23	I/O	
18	P11	P11	I/O	

3 Specifications

3.1 Absolute Maximum Ratings

Table 3. Absolute Maximum Ratings

Identification	Condition	Min.	Typ.	Max.	Unit
Source & IO	Battery mode	2.3	3.3	3.6	V
Operating Temperature	/	-40	25	+85	℃
Environmental Hot Pendulum	/	-20		20	℃ / Min

3.2 Handling Ratings

Table 4. Handling Ratings of RSBRS02ABR-01

Items	Condition	Min.	Typ.	Max.	Unit
Storage Temperature	Tstg	-40	+25	+125	℃
Human Body Model	HBM		±2000		V
Moisture Sensitivity Level			2		
Charged Device Model			±250		V

4 Application, Implementation, and Layout

4.1 Recommended PCB Footprint

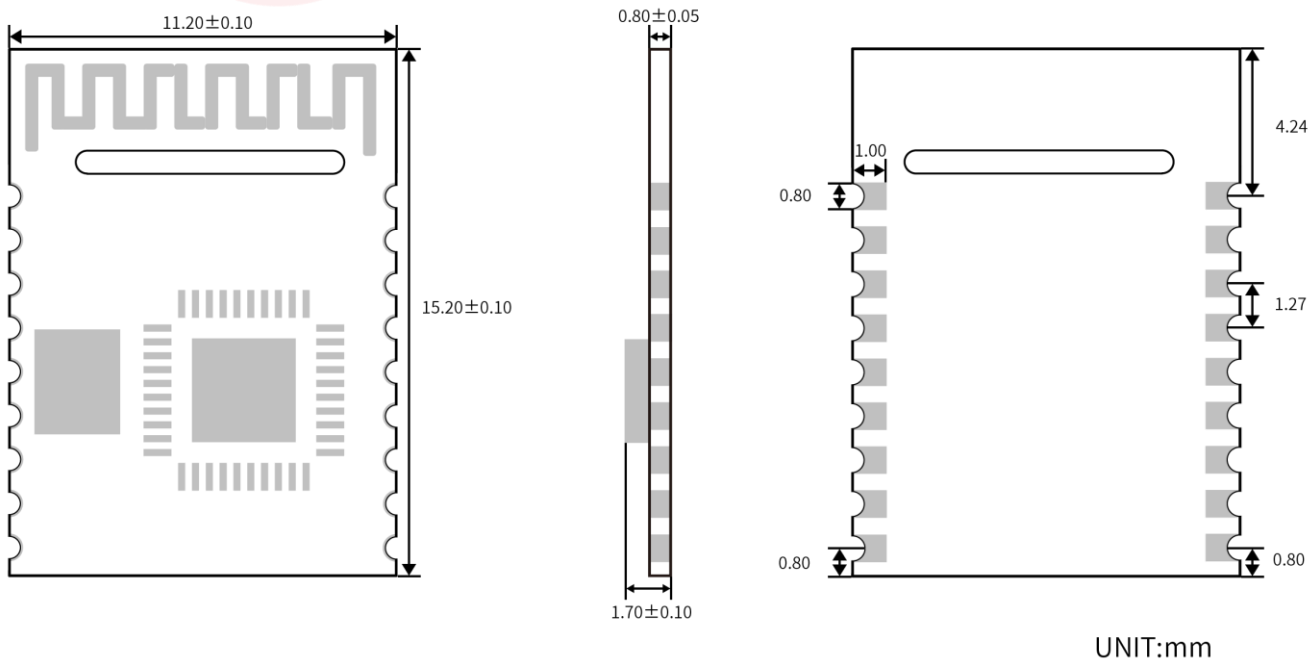

Figure 3. Recommended PCB Footprint of RSBRS02ABR-01 (mm)

4.2 Antenna

4.2.1 Antenna Design Recommendation

1. The antenna installation structure has a great influence on the module performance. It is necessary to ensure the antenna is exposed and preferably vertically upward. When the module is installed inside of the case, a high-quality antenna extension wire can be used to extend the antenna to the outside of the case.
2. The antenna must not be installed inside the metal case, which will cause the transmission distance to be greatly weakened.
3. The recommendation of antenna layout.

   The inverted-F antenna position on PCB is free-space electromagnetic radiation. The location and layout of the antenna is a key factor to increase the data rate and transmission range.

   Therefore, the layout of the module antenna location and routing is recommended as follows:

   (1) Place the antenna on the edge (corner) of the PCB.

   (2) Make sure that there is no signal line or copper foil in each layer below the antenna.

   (3) It is best to hollow out the antenna position in the following figure to ensure that the S11 of the module is minimally affected.

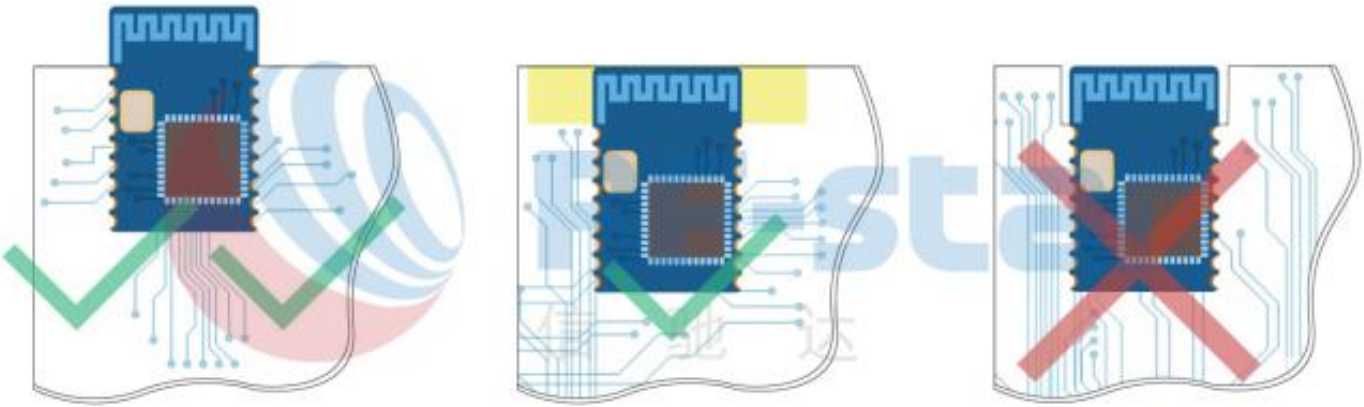

Figure 4. Recommendation of Antenna Layout

Note: The hollow-out position is based on the antenna used.

4.3 Basic Operation of Hardware Design

1. It is recommended to offer the module with a DC stabilized power supply, a tiny power supply ripple coefficient, and reliable ground. Please pay attention to the correct connection between the positive and negative poles of the power supply. Otherwise, the reverse connection may cause permanent damage to the module;
2. Please ensure the supply voltage is between the recommended values. The module will be permanently damaged if the voltage exceeds the maximum value. Please ensure a stable power supply and no frequently fluctuated voltage.
3. When designing the power supply circuit for the module, it is recommended to reserve more than 30% of the margin,

which is beneficial to the long-term stable operation of the whole machine. The module should be far away from the power electromagnetic, transformer, high-frequency wiring, and other parts with large electromagnetic interference.

4. The bottom of the module should avoid high-frequency digital routing, high-frequency analog routing, and power routing. If it has to route the wire on the bottom of the module, for example, it is assumed that the module is soldered to the Top Layer, the copper must be spread on the connection part of the top layer and the module, and be close to the digital part of the module and routed in the Bottom Layer (all copper is well-grounded).
5. Assuming that the module is soldered or placed in the Top Layer, it is also wrong to randomly route the Bottom Layer or other layers, which will affect the spurs and receiving sensitivity of the module to some degrees;
6. Assuming that there are devices with large electromagnetic interference around the module, which will greatly affect the module performance. It is recommended to stay away from the module according to the strength of the interference. If circumstances permit, appropriate isolation and shielding can be done.
7. Assuming that there are routings of large electromagnetic interference around the module (high-frequency digital, high-frequency analog, power routings), which will also greatly affect the module performance. It is recommended to stay away from the module according to the strength of the interference. If circumstances permit, appropriate isolation and shielding can be done.
8. It is recommended to stay away from the devices whose TTL protocol is the same 2.4 GHz physical layer, for example, USB 3.0.

4.4 Trouble Shooting

4.4.1 Unsatisfactory Transmission Distance

1. When there is a linear communication obstacle, the communication distance will be correspondingly weakened. Temperature, humidity, and co-channel interference will lead to an increase in communication packet loss rate. The performances of ground absorption and reflection of radio waves will be poor when the module is tested close to the ground.
2. Seawater has a strong ability to absorb radio waves, so the test results by the seaside are poor.
3. The signal attenuation will be very obvious if there is a metal near the antenna or the module is placed inside the metal shell.
4. The incorrect power register set or the high data rate in an open-air may shorten the communication distance. The higher the data rate, the closer the distance.
5. The low voltage of the power supply is lower than the recommended value at ambient temperature, and the lower the voltage, the smaller the power is.
6. The unmatchable antennas and modules or the poor quality of the antenna will affect the communication distance.

4.4.2 Vulnerable Module

1. Please ensure the supply voltage is between the recommended values. The module will be permanently damaged if the voltage exceeds the maximum value. Please ensure a stable power supply and no frequently fluctuated voltage.
2. Please ensure the anti-static installation and the electrostatic sensitivity of high-frequency devices.
3. Due to some humidity-sensitive components, please ensure suitable humidity during installation and application. If there is no special demand, it is not recommended to use at too high or too low temperature.

4.4.3 High Bit Error Rate

1. There are co-channel signal interferences nearby. It is recommended to be away from the interference sources or modify the frequency and channel to avoid interferences.
2. The unsatisfactory power supply may also cause garbled. It is necessary to ensure the power supply's reliability.
3. If the extension wire or feeder wire is of poor quality or too long, the bit error rate will be high.

4.5 Electrostatics Discharge Warnings

The module will be damaged for the discharge of static. RF-star suggests that all modules should follow the 3 precautions below:

1. According to the anti-static measures, bare hands are not allowed to touch modules.
2. Modules must be placed in anti-static areas.
3. Take the anti-static circuitry (when inputting HV or VHF) into consideration in product design.
   Static may result in the degradation in performance of the module, even causing the failure.

4.6 Soldering and Reflow Condition

1. Heating method: Conventional Convection or IR/convection.
2. Solder paste composition: Sn96.5 / Ag3.0 / Cu0.5
3. Allowable reflow soldering times: 2 times based on the following reflow soldering profile.
4. Temperature profile: Reflow soldering shall be done according to the following temperature profile.
5. Peak temperature: 245 ℃.

Table 5. Temperature Table of Soldering and Reflow

Profile Feature	Sn-Pb Assembly	Pb-Free Assembly
Solder Paste	Sn63 / Pb37	Sn96.5 / Ag3.0 / Cu0.5
Min. Preheating Temperature (T_{min})	100 ℃	150 ℃
Max. Preheating Temperature (T_{max})	150 ℃	200 ℃
Preheating Time (T_{min} to T_{max}) (t_1)	60 s ~ 120 s	60 s ~ 120 s

Average Ascend Rate (T_{max} to T_p)	Max. 3 ℃/s	Max. 3 ℃/s
Liquid Temperature (T_L)	183 ℃	217 ℃
Time above Liquidus (t_L)	60 s ~ 90 s	30 s ~ 90 s
Peak Temperature (T_p)	220 ℃ ~ 235 ℃	230 ℃ ~ 250 ℃
Average Descend Rate (T_p to T_{max})	Max. 6 ℃/s	Max. 6 ℃/s
Time from 25 ℃ to Peak Temperature (t_2)	Max. 6 minutes	Max. 8 minutes
Time of Soldering Zone (t_P)	20±10 s	20±10 s

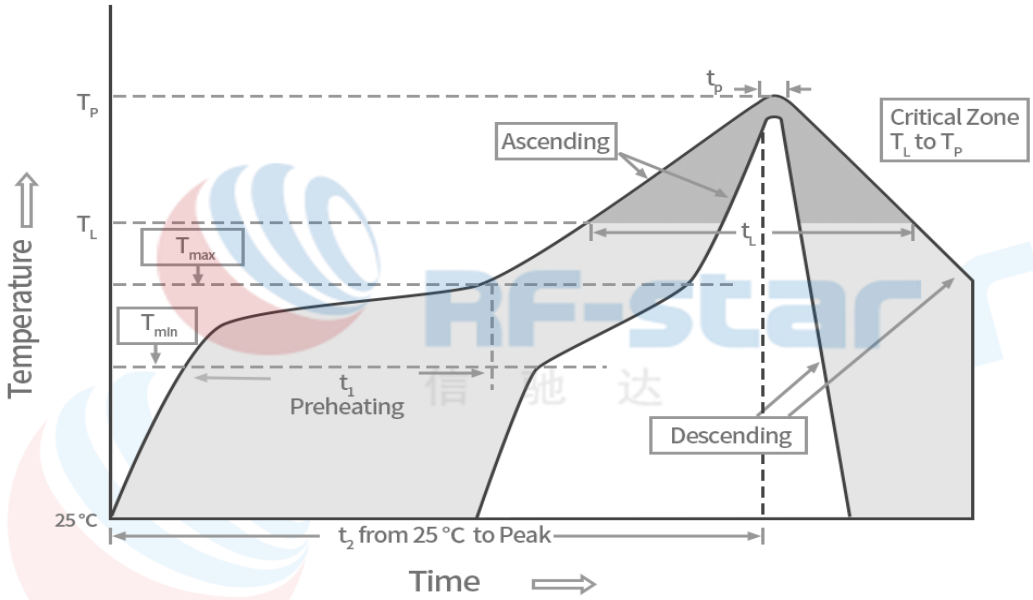

Figure 5. Recommended Reflow for Lead-Free Solder

Additional Testing and Evaluation for Host Product

The module is a limited module and complies with the requirement of FCC Part 15.247. According to FCC Part 15 Subpart C section 15.212, the radio elements must have the radio frequency circuitry shielded. However, due to there is no shield for this module, this module is granted as a Limited Modular Approval.
A C2PC is required for new host application. Only Grantees are permitted to make permissive changes.
Please contact us for further process with Shenzhen RF-STAR Technology CO.,LTD
The OEM integrators should follow the following C2PC test plan, based on Module RF report “BLA-EMC-20 2403-A9801”under FCC ID: 2ABN2-RSBRS02ABR-01.
For the host product installed this module exactly according to this guide, and did not make any hardware or software modifications to the module or modified the software but does not affect the radio characteristics, the host product will need to evaluate according to FCC Part 15 Subpart C §15.247 for Bluetooth LE:

- a. Maximum conducted output power for Channel 21.
- b. 6 dB Bandwidth for Channel 21
- c. Radiated spurious emissions include lower and higher band edge for Channel 1 and 40 with the other co-located transmitters.

If the power is higher or lower than the original grant, (though still within compliance) it might indicate something is not proper. Checking items a. and b. would be useful to show consistency between original grant and C2PCs.
The host product shall be evaluated for ensuring the continuous compliance for the FCC rules that apply to the host product. Additional guidance for testing host products is provided in KDB Publication 996369 D02 and D04.
This module was tested as a subsystem and its certification does not cover the FCC Part 15 Subpart B (unintentional radiator) rule requirement applicable to the final host. The host will still need to be reassessed for compliance to this portion of rule requirements.
For the host product is not installed according to this guide, the module certification will be invalid and a new grant certification will be required for the host product.

5 FCC Statement

FCC standards: FCC CFR Title 47 Part 15 Subpart C Section 15.247

PCB Antenna with antenna gain: -0.89dBi

This device complies with part 15 of the FCC Rules. Operation is subject to the following two conditions: (1 This device may not cause harmful interference, and (2 this device must accept any interference received, including interference that may cause undesired operation. Any Changes or modifications not expressly approved by the party responsible for compliance could void the user's authority to operate the equipment. Note: This equipment has been tested and found to comply with the limits for a Class B digital device, pursuant to part 15 of the FCC Rules. These limits are designed to provide reasonable protection against harmful interference in a residential installation. This equipment generates, uses and can radiate radio frequency energy and, if not installed and used in accordance with the instructions, may cause harmful interference to radio communications. However, there is no guarantee that interference will not occur in a particular installation. If this equipment does cause harmful interference to radio or television reception, which can be determined by turning the equipment off and on, the user is encouraged to try to correct the interference by one or more of the following measures:

—Reorient or relocate the receiving antenna.

—Increase the separation between the equipment and receiver.

—Connect the equipment into an outlet on a circuit different from that to which the receiver is connected.

—Consult the dealer or an experienced radio/TV technician for help.

FCC Radiation Exposure Statement

The modular can be installed or integrated in mobile or fix devices. This modular cannot be installed in any portable device if without any further certify include C2PC with SAR. This modular complies with FCC RF radiation exposure limits set forth for an uncontrolled environment. This transmitter must not be co-located or operating in conjunction with any other antenna or transmitter. This modular must be installed and operated with a minimum distance of 20 cm between the radiator and user body.

If the FCC identification number is not visible when the module is installed inside another device, then the outside of the device into which the module is installed must also display a label referring to the enclosed module. This exterior label can use wording such as the following: “ Contains Transmitter Module FCC ID: 2ABN2-RSBRS02ABR-01 Or Contains FCC ID: 2ABN2-RSBRS02ABR-01” When the module is installed inside another device, the user manual of the host must contain below warning

statements;

1. This device complies with Part 15 of the FCC Rules. Operation is subject to the following two conditions:

(1) This device may not cause harmful interference.

(2) This device must accept any interference received, including interference that may cause undesired operation.

Note: This equipment has been tested and found to comply with the limits for a Class B digital device, pursuant to part 15 of the FCC Rules. These limits are designed to provide reasonable protection against harmful interference in a residential installation. This equipment generates, uses and can radiate radio frequency energy and, if not installed and used in accordance with the instructions, may cause harmful interference to radio communications.However, there is no guarantee that interference will not occur in a particular installation. If this equipment does cause harmful interference to radio or television reception, which can be determined by turning the equipment off and on, the user is encouraged to try to correct the interference by one or more of the following measures:

—Reorient or relocate the receiving antenna.

—Increase the separation between the equipment and receiver.

—Connect the equipment into an outlet on a circuit different from that to which the receiver is connected.

—Consult the dealer or an experienced radio/TV technician for help.

2. Changes or modifications not expressly approved by the party responsible for compliance could void the user's authority to operate the equipment.

The devices must be installed and used in strict accordance with the manufacturer's instructions as described in the user documentation that comes with the product.

Any company of the host device which install modular with Limit modular approval should perform the test of radiated & conducted emission and spurious emission,etc. according to FCC part 15C : 15.247 and 15.209 & 15.207 ,15B Class B requirement, Only if the test result comply with FCC part 15C : 15.247 and 15.209 & 15.207 ,15B Class B requirement, then the host can be sold legally

6 Revision History

Date	Version No.	Description
2020.05.15	V1.0	The initial version is released.

Note:

1. The document will be optimized and updated from time to time. Before using this document, please make sure it is the latest version.
2. To obtain the latest document, please download it from the official website: www.szrfstar.com.

7 Contact Us

SHENZHEN RF-STAR TECHNOLOGY CO., LTD.

Shenzhen HQ:

Add.: Room A502 ~ A503, Podium Building No. 12, Shenzhen Bay Science and Technology Ecological Park, Nanshan District, Shenzhen, Guangdong, China, 518063

Tel.: 86-755-3695 3756

Chengdu Branch:

Add.: N2-1604, Global Center, North No. 1700, Tianfu Avenue, Hi-Tech District, Chengdu, Sichuan, China, 610095

Tel.: 86-28-6577 5970

Email: sunny@szrfstar.com, sales@szrfstar.com

Web.: www.szrfstar.com