FCC SAR Test Report

APPLICANT	:	**Nyle Oswind Parry Limited Liability Company**
EQUIPMENT	:	**Tablet PC**
MODEL NAME	:	**GPZ45RW**
FCC ID	:	**2ABO6-1210**
STANDARD	:	**FCC 47 CFR Part 2 (2.1093)** **ANSI/IEEE C95.1-1992** **IEEE 1528-2003**

We, SPORTON INTERNATIONAL INC., would like to declare that the tested sample has been evaluated in accordance with the procedures and had been in compliance with the applicable technical standards.

The test results in this report apply exclusively to the tested model / sample. Without written approval of SPORTON INTERNATIONAL INC., the test report shall not be reproduced except in full.

Reviewed by: Eric Huang / Deputy Manager

Approved by: Jones Tsai / Manager

Testing Laboratory
1190

SPORTON INTERNATIONAL INC.

No. 52, Hwa Ya 1st Rd., Hwa Ya Technology Park, Kwei-Shan Hsiang, Tao Yuan Hsien, Taiwan, R.O.C.

Table of Contents

1. Statement of Compliance **4**
2. Administration Data **4**
3. Guidance Standard **5**
4. Equipment Under Test (EUT) **5**
4.1 General Information 5
4.2 Maximum Tune-up Limit 5
5. RF Exposure Limits **6**
5.1 Uncontrolled Environment 6
5.2 Controlled Environment 6
6. Specific Absorption Rate (SAR) **7**
6.1 Introduction 7
6.2 SAR Definition 7
7. System Description and Setup **8**
8. Measurement Procedures **9**
8.1 Spatial Peak SAR Evaluation 9
8.2 Power Reference Measurement 10
8.3 Area Scan 10
8.4 Zoom Scan 11
8.5 Volume Scan Procedures 11
8.6 Power Drift Monitoring 11
9. Test Equipment List **12**
10. System Verification **13**
10.1 Tissue Verification 13
10.2 System Performance Check Results 14
11. RF Exposure Positions **14**
11.1 SAR Testing for Tablet 14
12. Conducted RF Output Power (Unit: dBm) **15**
13. Exposure Position Conditions **27**
14. SAR Test Results **29**
14.1 Body SAR 29
14.2 Repeated SAR Measurement 32
15. Simultaneous Transmission Analysis **33**
15.1 Body Exposure Conditions 33
15.2 SPLSR Evaluation and Analysis 34
16. Uncertainty Assessment **35**
17. References **38**
Appendix A. Plots of System Performance Check
Appendix B. Plots of High SAR Measurement
Appendix C. DASY Calibration Certificate
Appendix D. Test Setup Photos

Revision History

REPORT NO.	VERSION	DESCRIPTION	ISSUED DATE
FA432436-07	Rev. 01	Initial issue of report	Aug. 11, 2014

1. Statement of Compliance

The maximum results of Specific Absorption Rate (SAR) found during testing for **Nyle Oswind Parry Limited Liability Company, Tablet PC, GPZ45RW**, are as follows.

Equipment Class	Frequency Band	Highest SAR Summary	
		Body 1g SAR (W/kg)	Simultaneous Transmission 1g SAR (W/kg)
DTS	WLAN 2.4GHz Band	1.19	1.47
NII	WLAN 5.2GHz Band	**1.30**	1.30
	WLAN 5.3GHz Band	1.29	
	WLAN 5.5GHz Band	1.25	
	WLAN 5.8GHz Band	1.28	
DSS	Bluetooth	0.12	0.12
Date of Testing:		04/17/2014 ~ 07/30/2014	

This device is in compliance with Specific Absorption Rate (SAR) for general population/uncontrolled exposure limits (1.6 W/kg) specified in FCC 47 CFR part 2 (2.1093) and ANSI/IEEE C95.1-1992, and had been tested in accordance with the measurement methods and procedures specified in IEEE 1528-2003.

2. Administration Data

Testing Laboratory	
Test Site	SPORTON INTERNATIONAL INC.
Test Site Location	No. 52, Hwa Ya 1st Rd., Hwa Ya Technology Park, Kwei-Shan Hsiang, Tao Yuan Hsien, Taiwan, R.O.C. TEL: +886-3-327-3456 FAX: +886-3-328-4978

Applicant	
Company Name	Nyle Oswind Parry Limited Liability Company
Address	7027 Old Madison Pike, Suite 108, Huntsville, Alabama 35806

3. Guidance Standard

The Specific Absorption Rate (SAR) testing specification, method, and procedure for this device is in accordance with the following standards:

- FCC 47 CFR Part 2 (2.1093)
- ANSI/IEEE C95.1-1992
- IEEE 1528-2003
- FCC KDB 865664 D01 SAR Measurement 100 MHz to 6 GHz v01r03
- FCC KDB 865664 D02 SAR Reporting v01r01
- FCC KDB 447498 D01 General RF Exposure Guidance v05r02
- FCC KDB 248227 D01 SAR meas for 802 11abg v01r02
- FCC KDB 644545 D01 Guidance for IEEE 802 11ac v01r02
- FCC KDB 616217 D04 SAR for laptop and tablets v01r01

4. Equipment Under Test (EUT)

4.1 General Information

Product Feature & Specification	
Equipment Name	Tablet PC
Model Name	GPZ45RW
FCC ID	2ABO6-1210
S/N	B08E0202409700U6
Wireless Technology and Frequency Range	WLAN 2.4GHz Band: 2412 MHz ~ 2462 MHz WLAN 5.2GHz Band: 5180 MHz ~ 5240 MHz WLAN 5.3GHz Band: 5260 MHz ~ 5320 MHz WLAN 5.5GHz Band: 5500 MHz ~ 5700 MHz WLAN 5.8GHz Band: 5745 MHz ~ 5825 MHz Bluetooth: 2402 MHz ~ 2480 MHz
Mode	• 802.11a/b/g/n/ac HT20/HT40/VHT20/VHT40/VHT80 • Bluetooth v3.0+EDR，Bluetooth v4.0-LE
Remark: 1. 5GHz WLAN operation in 5600 MHz ~ 5650 MHz is notched.	

4.2 Maximum Tune-up Limit

Band / Mode	Average power(dBm)			
	v3.0+EDR			v4.0-LE
	1Mbps	2Mbps	3Mbps	
2.4 GHz Bluetooth	9.5	6	6	6

Band / Mode	IEEE 802.11 average power(dBm)		
	Antenna 1	Antenna 2	Antenna 1+2
2.4GHz Band	15.5	15.5	18.5
5.2GHz Band	12.5	12.5	15.5
5.3GHz Band	13.0	11.5	15.3
5.5GHz Band	13.0	11.5	15.3
5.8GHz Band	13.0	13.0	16.0

5. RF Exposure Limits

5.1 Uncontrolled Environment

Uncontrolled Environments are defined as locations where there is the exposure of individuals who have no knowledge or control of their exposure. The general population/uncontrolled exposure limits are applicable to situations in which the general public may be exposed or in which persons who are exposed as a consequence of their employment may not be made fully aware of the potential for exposure or cannot exercise control over their exposure. Members of the general public would come under this category when exposure is not employment-related; for example, in the case of a wireless transmitter that exposes persons in its vicinity.

5.2 Controlled Environment

Controlled Environments are defined as locations where there is exposure that may be incurred by persons who are aware of the potential for exposure, (i.e. as a result of employment or occupation). In general, occupational/controlled exposure limits are applicable to situations in which persons are exposed as a consequence of their employment, who have been made fully aware of the potential for exposure and can exercise control over their exposure. The exposure category is also applicable when the exposure is of a transient nature due to incidental passage through a location where the exposure levels may be higher than the general population/uncontrolled limits, but the exposed person is fully aware of the potential for exposure and can exercise control over his or her exposure by leaving the area or by some other appropriate means.

Limits for Occupational/Controlled Exposure (W/kg)

Whole-Body	Partial-Body	Hands, Wrists, Feet and Ankles
0.4	8.0	20.0

Limits for General Population/Uncontrolled Exposure (W/kg)

Whole-Body	Partial-Body	Hands, Wrists, Feet and Ankles
0.08	1.6	4.0

1. Whole-Body SAR is averaged over the entire body, partial-body SAR is averaged over any 1gram of tissue defined as a tissue volume in the shape of a cube. SAR for hands, wrists, feet and ankles is averaged over any 10 grams of tissue defined as a tissue volume in the shape of a cube.

6. Specific Absorption Rate (SAR)

6.1 Introduction

SAR is related to the rate at which energy is absorbed per unit mass in an object exposed to a radio field. The SAR distribution in a biological body is complicated and is usually carried out by experimental techniques or numerical modeling. The standard recommends limits for two tiers of groups, occupational/controlled and general population/uncontrolled, based on a person's awareness and ability to exercise control over his or her exposure. In general, occupational/controlled exposure limits are higher than the limits for general population/uncontrolled.

6.2 SAR Definition

The SAR definition is the time derivative (rate) of the incremental energy (dW) absorbed by (dissipated in) an incremental mass (dm) contained in a volume element (dv) of a given density (ρ). The equation description is as below:

$$\mathbf{SAR} = \frac{\mathbf{d}}{\mathbf{dt}}\left(\frac{\mathbf{dW}}{\mathbf{dm}}\right) = \frac{\mathbf{d}}{\mathbf{dt}}\left(\frac{\mathbf{dW}}{\boldsymbol{\rho}\mathbf{dv}}\right)$$

SAR is expressed in units of Watts per kilogram (W/kg)

$$\mathbf{SAR} = \frac{\boldsymbol{\sigma}|\mathbf{E}|^{\mathbf{2}}}{\boldsymbol{\rho}}$$

Where: σ is the conductivity of the tissue, ρ is the mass density of the tissue and E is the RMS electrical field strength.

7. System Description and Setup

The DASY system used for performing compliance tests consists of the following items:

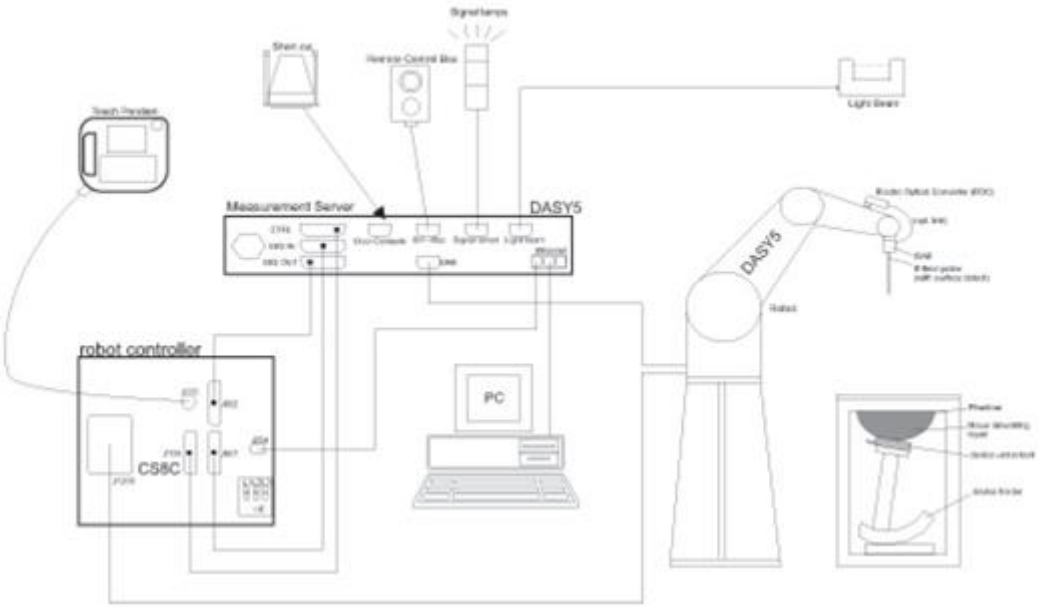

- A standard high precision 6-axis robot with controller, teach pendant and software. An arm extension for accommodating the data acquisition electronics (DAE).
- An isotropic Field probe optimized and calibrated for the targeted measurement.
- A data acquisition electronics (DAE) which performs the signal amplification, signal multiplexing, AD-conversion, offset measurements, mechanical surface detection, collision detection, etc. The unit is battery powered with standard or rechargeable batteries. The signal is optically transmitted to the EOC.
- The Electro-optical converter (EOC) performs the conversion from optical to electrical signals for the digital communication to the DAE. To use optical surface detection, a special version of the EOC is required. The EOC signal is transmitted to the measurement server.
- The function of the measurement server is to perform the time critical tasks such as signal filtering, control of the robot operation and fast movement interrupts.
- The Light Beam used is for probe alignment. This improves the (absolute) accuracy of the probe positioning.
- A computer running WinXP or Win7 and the DASY5 software.
- Remote control and teach pendant as well as additional circuitry for robot safety such as warning lamps, etc.
- The phantom, the device holder and other accessories according to the targeted measurement.

8. Measurement Procedures

The measurement procedures are as follows:

<Conducted power measurement>

(a) For WWAN power measurement, use base station simulator to configure EUT WWAN transmission in conducted connection with RF cable, at maximum power in each supported wireless interface and frequency band.
(b) Read the WWAN RF power level from the base station simulator.
(c) For WLAN/BT power measurement, use engineering software to configure EUT WLAN/BT continuously transmission, at maximum RF power in each supported wireless interface and frequency band
(d) Connect EUT RF port through RF cable to the power meter, and measure WLAN/BT output power

<SAR measurement>

(a) Use base station simulator to configure EUT WWAN transmission in radiated connection, and engineering software to configure EUT WLAN/BT continuously transmission, at maximum RF power, in the highest power channel.
(b) Place the EUT in the positions as Appendix D demonstrates.
(c) Set scan area, grid size and other setting on the DASY software.
(d) Measure SAR results for the highest power channel on each testing position.
(e) Find out the largest SAR result on these testing positions of each band
(f) Measure SAR results for other channels in worst SAR testing position if the reported SAR of highest power channel is larger than 0.8 W/kg

According to the test standard, the recommended procedure for assessing the peak spatial-average SAR value consists of the following steps:

(a) Power reference measurement
(b) Area scan
(c) Zoom scan
(d) Power drift measurement

8.1 Spatial Peak SAR Evaluation

The procedure for spatial peak SAR evaluation has been implemented according to the test standard. It can be conducted for 1g and 10g, as well as for user-specific masses. The DASY software includes all numerical procedures necessary to evaluate the spatial peak SAR value.

The base for the evaluation is a "cube" measurement. The measured volume must include the 1g and 10g cubes with the highest averaged SAR values. For that purpose, the center of the measured volume is aligned to the interpolated peak SAR value of a previously performed area scan.

The entire evaluation of the spatial peak values is performed within the post-processing engine (SEMCAD). The system always gives the maximum values for the 1g and 10g cubes. The algorithm to find the cube with highest averaged SAR is divided into the following stages:

(a) Extraction of the measured data (grid and values) from the Zoom Scan
(b) Calculation of the SAR value at every measurement point based on all stored data (A/D values and measurement parameters)
(c) Generation of a high-resolution mesh within the measured volume
(d) Interpolation of all measured values form the measurement grid to the high-resolution grid
(e) Extrapolation of the entire 3-D field distribution to the phantom surface over the distance from sensor to surface
(f) Calculation of the averaged SAR within masses of 1g and 10g

8.2 Power Reference Measurement

The Power Reference Measurement and Power Drift Measurements are for monitoring the power drift of the device under test in the batch process. The minimum distance of probe sensors to surface determines the closest measurement point to phantom surface. This distance cannot be smaller than the distance of sensor calibration points to probe tip as defined in the probe properties.

8.3 Area Scan

The area scan is used as a fast scan in two dimensions to find the area of high field values, before doing a fine measurement around the hot spot. The sophisticated interpolation routines implemented in DASY software can find the maximum found in the scanned area, within a range of the global maximum. The range (in dB0 is specified in the standards for compliance testing. For example, a 2 dB range is required in IEEE standard 1528 and IEC 62209 standards, whereby 3 dB is a requirement when compliance is assessed in accordance with the ARIB standard (Japan), if only one zoom scan follows the area scan, then only the absolute maximum will be taken as reference. For cases where multiple maximums are detected, the number of zoom scans has to be increased accordingly.

Area scan parameters extracted from FCC KDB 865664 D01v01r03 SAR measurement 100 MHz to 6 GHz.

	≤ 3 GHz	> 3 GHz
Maximum distance from closest measurement point (geometric center of probe sensors) to phantom surface	5 ± 1 mm	½·δ·ln(2) ± 0.5 mm
Maximum probe angle from probe axis to phantom surface normal at the measurement location	30° ± 1°	20° ± 1°
Maximum area scan spatial resolution: Δx_{Area}, Δy_{Area}	≤ 2 GHz: ≤ 15 mm 2 – 3 GHz: ≤ 12 mm	3 – 4 GHz: ≤ 12 mm 4 – 6 GHz: ≤ 10 mm
	When the x or y dimension of the test device, in the measurement plane orientation, is smaller than the above, the measurement resolution must be ≤ the corresponding x or y dimension of the test device with at least one measurement point on the test device.	

8.4 Zoom Scan

Zoom scans are used assess the peak spatial SAR values within a cubic averaging volume containing 1 gram and 10 gram of simulated tissue. The zoom scan measures points (refer to table below) within a cube shoes base faces are centered on the maxima found in a preceding area scan job within the same procedure. When the measurement is done, the zoom scan evaluates the averaged SAR for 1 gram and 10 gram and displays these values next to the job's label.

Zoom scan parameters extracted from FCC KDB 865664 D01v01r03 SAR measurement 100 MHz to 6 GHz.

			≤ 3 GHz	> 3 GHz
Maximum zoom scan spatial resolution: Δx_{Zoom}, Δy_{Zoom}			≤ 2 GHz: ≤ 8 mm 2 – 3 GHz: ≤ 5 mm*	3 – 4 GHz: ≤ 5 mm* 4 – 6 GHz: ≤ 4 mm*
Maximum zoom scan spatial resolution, normal to phantom surface	uniform grid: $\Delta z_{Zoom}(n)$		≤ 5 mm	3 – 4 GHz: ≤ 4 mm 4 – 5 GHz: ≤ 3 mm 5 – 6 GHz: ≤ 2 mm
	graded grid	$\Delta z_{Zoom}(1)$: between 1st two points closest to phantom surface	≤ 4 mm	3 – 4 GHz: ≤ 3 mm 4 – 5 GHz: ≤ 2.5 mm 5 – 6 GHz: ≤ 2 mm
		$\Delta z_{Zoom}(n>1)$: between subsequent points	$\leq 1.5 \cdot \Delta z_{Zoom}(n-1)$	
Minimum zoom scan volume	x, y, z		≥ 30 mm	3 – 4 GHz: ≥ 28 mm 4 – 5 GHz: ≥ 25 mm 5 – 6 GHz: ≥ 22 mm

Note: δ is the penetration depth of a plane-wave at normal incidence to the tissue medium; see draft standard IEEE P1528-2011 for details.

* When zoom scan is required and the *reported* SAR from the *area scan based 1-g SAR estimation* procedures of KDB 447498 is ≤ 1.4 W/kg, ≤ 8 mm, ≤ 7 mm and ≤ 5 mm zoom scan resolution may be applied, respectively, for 2 GHz to 3 GHz, 3 GHz to 4 GHz and 4 GHz to 6 GHz.

8.5 Volume Scan Procedures

The volume scan is used for assess overlapping SAR distributions for antennas transmitting in different frequency bands. It is equivalent to an oversized zoom scan used in standalone measurements. The measurement volume will be used to enclose all the simultaneous transmitting antennas. For antennas transmitting simultaneously in different frequency bands, the volume scan is measured separately in each frequency band. In order to sum correctly to compute the 1g aggregate SAR, the EUT remain in the same test position for all measurements and all volume scan use the same spatial resolution and grid spacing. When all volume scan were completed, the software, SEMCAD postprocessor can combine and subsequently superpose these measurement data to calculating the multiband SAR.

8.6 Power Drift Monitoring

All SAR testing is under the EUT install full charged battery and transmit maximum output power. In DASY measurement software, the power reference measurement and power drift measurement procedures are used for monitoring the power drift of EUT during SAR test. Both these procedures measure the field at a specified reference position before and after the SAR testing. The software will calculate the field difference in dB. If the power drifts more than 5%, the SAR will be retested.

9. Test Equipment List

Manufacturer	Name of Equipment	Type/Model	Serial Number	Calibration	
				Last Cal.	Due Date
SPEAG	2450MHz System Validation Kit	D2450V2	924	Nov. 13, 2013	Nov. 12, 2014
SPEAG	5GHz System Validation Kit	D5GHzV2	1128	Jul. 24, 2013	Jul. 23, 2014
SPEAG	Data Acquisition Electronics	DAE4	778	Aug. 21, 2013	Aug. 20, 2014
SPEAG	Data Acquisition Electronics	DAE4	1338	Nov. 05, 2013	Nov. 04, 2014
SPEAG	Data Acquisition Electronics	DAE3	577	May. 15, 2014	May. 14, 2015
SPEAG	Data Acquisition Electronics	DAE4	1279	Jan. 30, 2014	Jan. 29, 2015
SPEAG	Data Acquisition Electronics	DAE4	1425	Mar. 03, 2014	Mar. 02, 2015
SPEAG	Dosimetric E-Field Probe	ES3DV3	3270	Sep. 24, 2013	Sep. 23, 2014
SPEAG	Dosimetric E-Field Probe	EX3DV4	3935	Nov. 04, 2013	Nov. 03, 2014
SPEAG	Dosimetric E-Field Probe	EX3DV4	3931	Sep. 10, 2013	Sep. 09, 2014
SPEAG	Dosimetric E-Field Probe	EX3DV4	3954	Nov. 04, 2013	Nov. 03, 2014
Wisewind	Thermometer	ETP-101	TM560	Oct. 22, 2013	Oct. 21, 2014
Wisewind	Thermometer	ETP-101	TM685	Oct. 22, 2013	Oct. 21, 2014
Wisewind	Thermometer	HTC-1	TM642	Oct. 22, 2013	Oct. 21, 2014
Wisewind	Thermometer	HTC-1	TM281	Oct. 22, 2013	Oct. 21, 2014
SPEAG	Device Holder	N/A	N/A	NCR	NCR
Agilent	Signal Generator	E4438C	MY49070755	Oct. 08, 2013	Oct. 07, 2014
SPEAG	Dielectric Probe Kit	DAK-3.5	1126	Jul. 23, 2013	Jul. 22, 2014
SPEAG	Dielectric Probe Kit	DAKS-3.5	0004	Mar. 04, 2014	Mar. 03, 2015
Agilent	ENA Network Analyzer	E5071C	MY46316648	Feb. 07, 2014	Feb. 06, 2015
Anritsu	Power Meter	ML2495A	1349001	Dec. 04, 2013	Dec. 03, 2014
Anritsu	Power Sensor	MA2411B	1306099	Dec. 03, 2013	Dec. 02, 2014
R&S	Spectrum Analyzer	FSP30	101067	Nov. 20, 2013	Nov. 19, 2014
Agilent	Dual Directional Coupler	778D	50422	Note 1	
Woken	Attenuator	WK0602-XX	N/A	Note 1	
PE	Attenuator	PE7005-10	N/A	Note 1	
PE	Attenuator	PE7005- 3	N/A	Note 1	
AR	Power Amplifier	5S1G4M2	0328767	Note 1	
Mini-Circuits	Power Amplifier	ZVE-3W	162601250	Note 1	
Mini-Circuits	Power Amplifier	ZHL-42W+	13440021344	Note 1	

General Note:

1. Prior to system verification and validation, the path loss from the signal generator to the system check source and the power meter, which includes the amplifier, cable, attenuator and directional coupler, was measured by the network analyzer. The reading of the power meter was offset by the path loss difference between the path to the power meter and the path to the system check source to monitor the actual power level fed to the system check source.

10. System Verification

10.1 Tissue Verification

The following tissue formulations are provided for reference only as some of the parameters have not been thoroughly verified. The composition of ingredients may be modified accordingly to achieve the desired target tissue parameters required for routine SAR evaluation.

Frequency (MHz)	Water (%)	Sugar (%)	Cellulose (%)	Salt (%)	Preventol (%)	DGBE (%)	Conductivity (σ)	Permittivity (εr)
For Head								
750	41.1	57.0	0.2	1.4	0.2	0	0.89	41.9
835	40.3	57.9	0.2	1.4	0.2	0	0.90	41.5
900	40.3	57.9	0.2	1.4	0.2	0	0.97	41.5
1800, 1900, 2000	55.2	0	0	0.3	0	44.5	1.40	40.0
2450	55.0	0	0	0	0	45.0	1.80	39.2
2600	54.8	0	0	0.1	0	45.1	1.96	39.0
For Body								
750	51.7	47.2	0	0.9	0.1	0	0.96	55.5
835	50.8	48.2	0	0.9	0.1	0	0.97	55.2
900	50.8	48.2	0	0.9	0.1	0	1.05	55.0
1800, 1900, 2000	70.2	0	0	0.4	0	29.4	1.52	53.3
2450	68.6	0	0	0	0	31.4	1.95	52.7
2600	68.1	0	0	0.1	0	31.8	2.16	52.5

Simulating Liquid for 5GHz, Manufactured by SPEAG

Ingredients	(% by weight)
Water	64~78%
Mineral oil	11~18%
Emulsifiers	9~15%
Additives and Salt	2~3%

<Tissue Dielectric Parameter Check Results>

Frequency (MHz)	Tissue Type	Liquid Temp. (℃)	Conductivity (σ)	Permittivity (ε_r)	Conductivity Target (σ)	Permittivity Target (ε_r)	Delta (σ) (%)	Delta (ε_r) (%)	Limit (%)	Date
2450	Body	22.5	1.957	53.837	1.95	52.70	0.36	2.16	±5	2014/5/5
2450	Body	22.6	2.005	53.959	1.95	52.70	2.82	2.39	±5	2014/7/24
2450	Body	22.3	1.930	53.269	1.95	52.70	-1.03	1.08	±5	2014/7/30
5200	Body	22.3	5.084	48.917	5.30	49.00	-4.08	-0.17	±5	2014/5/6
5200	Body	22.3	5.279	48.534	5.30	49.00	-0.40	-0.95	±5	2014/5/7
5300	Body	22.3	5.457	47.597	5.42	48.88	0.68	-2.62	±5	2014/4/17
5300	Body	22.3	5.268	48.783	5.42	48.88	-2.80	-0.20	±5	2014/5/6
5300	Body	22.3	5.418	48.319	5.42	48.88	-0.04	-1.15	±5	2014/5/7
5600	Body	22.3	5.681	48.192	5.77	48.47	-1.54	-0.57	±5	2014/5/6
5600	Body	22.3	5.849	47.666	5.77	48.47	1.37	-1.66	±5	2014/5/7
5800	Body	22.3	6.168	46.453	6.00	48.20	2.80	-3.62	±5	2014/4/17
5800	Body	22.5	6.228	47.321	6.00	48.20	3.80	-1.82	±5	2014/4/18
5800	Body	22.3	6.113	47.156	6.00	48.20	1.88	-2.17	±5	2014/5/7

10.2 System Performance Check Results

Comparing to the original SAR value provided by SPEAG, the verification data should be within its specification of 10 %. Below table shows the target SAR and measured SAR after normalized to 1W input power. The table below indicates the system performance check can meet the variation criterion and the plots can be referred to Appendix A of this report.

Date	Frequency (MHz)	Tissue Type	Input Power (mW)	Dipole S/N	Probe S/N	DAE S/N	Measured SAR (W/kg)	Targeted SAR (W/kg)	Normalized SAR (W/kg)	Deviation (%)
2014/5/5	2450	Body	250	D2450V2-924	3270	778	11.60	50.20	46.40	-7.57
2014/7/24	2450	Body	250	D2450V2-924	3954	1425	12.70	50.20	50.80	1.20
2014/7/30	2450	Body	250	D2450V2-924	3931	577	12.60	50.20	50.40	0.40
2014/5/6	5200	Body	100	D5GHzV2-1128	3935	1338	7.36	73.40	73.60	0.27
2014/5/7	5200	Body	100	D5GHzV2-1128	3954	1279	7.37	73.40	73.70	0.41
2014/4/17	5300	Body	100	D5GHzV2-1128	3935	1338	7.69	74.30	76.90	3.50
2014/5/6	5300	Body	100	D5GHzV2-1128	3935	1338	7.77	74.30	77.70	4.58
2014/5/7	5300	Body	100	D5GHzV2-1128	3954	1279	7.36	74.30	73.60	-0.94
2014/5/6	5600	Body	100	D5GHzV2-1128	3935	1338	7.80	77.80	78.00	0.26
2014/5/7	5600	Body	100	D5GHzV2-1128	3954	1279	7.82	77.80	78.20	0.51
2014/4/17	5800	Body	100	D5GHzV2-1128	3935	1338	7.26	72.20	72.60	0.55
2014/4/18	5800	Body	100	D5GHzV2-1128	3935	1338	7.33	72.20	73.30	1.52
2014/5/7	5800	Body	100	D5GHzV2-1128	3954	1279	7.36	72.20	73.60	1.94

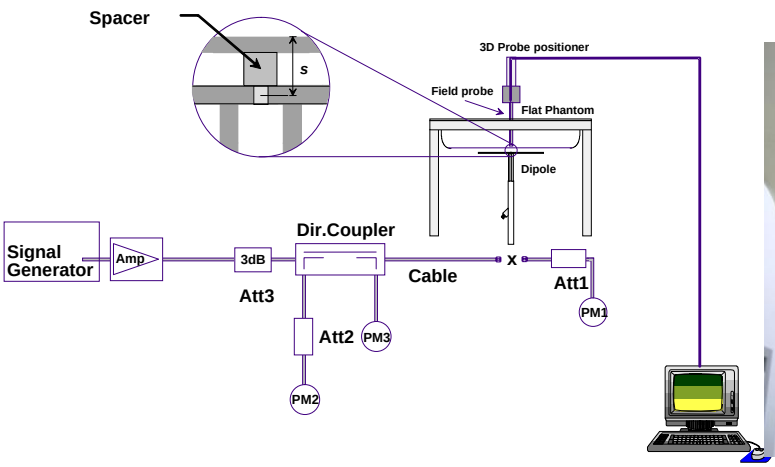

Fig 8.3.1 System Performance Check Setup

Fig 8.3.2 Setup Photo

11. RF Exposure Positions

11.1 SAR Testing for Tablet

This device can be used also in full sized tablet exposure conditions, due to its size. Per FCC KDB 616217, the back surface and edges of the tablet should be tested for SAR compliance with the tablet touching the phantom. The SAR exclusion threshold in KDB 447498 D01v05r02 can be applied to determine SAR test exclusion for adjacent edge configurations. The closest distance from the antenna to an adjacent tablet edge is used to determine if SAR testing is required for the adjacent edges, with the adjacent edge positioned against the phantom and the edge containing the antenna positioned perpendicular to the phantom.

12. Conducted RF Output Power (Unit: dBm)

<WLAN Conducted Power>

General Note:

1. For SAR testing was performed on single antenna RF power in SISO mode is larger or equal to the single antenna RF power in MIMO mode, and for RF exposure assessment of MIMO mode simultaneous transmission exclusion analysis was performed with SAR test results of each antenna in SISO mode.
2. For IEEE802.11a/b/g SAR testing, highest average RF output power channel for the lowest data rate for 802.11a/b were selected for SAR evaluation. 802.11g were not investigated since the average output powers over all channels and data rates were not more than 0.25 dB higher than the tested channel in the lowest data rate of 802.11a/b mode.
3. For IEEE802.11n/ac, SAR testing can be conducted on channel with the highest output power when taking into consideration tune-up tolerance for same test configuration that was identified during SAR evaluations for IEEE802.11a/b/g (as applicable) provided bandwidth and test position are the same.
4. For IEEE802.11n/ac with multiple channel BW configurations, highest channel BW configuration with highest output power limit shall be tested.
5. Testing of lower BW configurations is not required when the maximum average output of the default test channels in each lower BW configuration is less than 1/4dB higher than the default test channel in the highest BW configuration.
6. The measured power of antenna 1 and antenna 2 is summed to a total power.

<2.4GHz WLNA Total Power of Antenna 1+2>

WLAN 2.4GHz 802.11b Average Power (dBm)					
Power vs. Channel					
Channel	Frequency (MHz)	Data Rate	2Mbps	5.5Mbps	11Mbps
		1Mbps			
CH 1	2412	18.2	18.1	18.1	18.1
CH 6	2437	18.3			
CH 11	2462	18.0			

WLAN 2.4GHz 802.11g Average Power (dBm)									
Power vs. Channel									
Channel	Frequency (MHz)	Data Rate	9Mbps	12Mbps	18Mbps	24Mbps	36Mbps	48Mbps	54Mbps
		6Mbps							
CH 1	2412	17.3	17.7	17.6	17.6	17.5	17.4	17.5	17.6
CH 6	2437	17.9							
CH 11	2462	17.3							

WLAN 2.4GHz 802.11n-HT20 Average Power (dBm)									
Power vs. Channel									
Channel	Frequency (MHz)	MCS Index	MCS1	MCS2	MCS3	MCS4	MCS5	MCS6	MCS7
		MCS0							
CH 1	2412	16.4	17.8	17.7	17.8	17.6	17.8	17.6	17.8
CH 6	2437	18.0							
CH 11	2462	17.4							

WLAN 2.4GHz 802.11ac-VHT20 Average Power (dBm)										
Power vs. Channel										
Channel	Frequency (MHz)	MCS Index	MCS1	MCS2	MCS3	MCS4	MCS5	MCS6	MCS7	MCS8
		MCS0								
CH 1	2412	16.5	17.6	17.6	17.8	17.9	17.7	17.7	17.8	17.6
CH 6	2437	18.0								
CH 11	2462	17.3								

<2.4GHz WLAN Antenna 1>

WLAN 2.4GHz 802.11b Average Power (dBm)					
Power vs. Channel					
Channel	Frequency (MHz)	Data Rate	2Mbps	5.5Mbps	11Mbps
		1Mbps			
CH 1	2412	15.2	15.1	15.0	15.0
CH 6	2437	15.2			
CH 11	2462	15.0			

WLAN 2.4GHz 802.11g Average Power (dBm)									
Power vs. Channel									
Channel	Frequency (MHz)	Data Rate	9Mbps	12Mbps	18Mbps	24Mbps	36Mbps	48Mbps	54Mbps
		6Mbps							
CH 1	2412	14.3	14.9	14.8	14.8	14.7	14.6	14.7	14.7
CH 6	2437	14.2							
CH 11	2462	14.3							

WLAN 2.4GHz 802.11n-HT20 Average Power (dBm)									
Power vs. Channel									
Channel	Frequency (MHz)	MCS Index	MCS1	MCS2	MCS3	MCS4	MCS5	MCS6	MCS7
		MCS0							
CH 1	2412	13.3	14.9	14.8	14.9	14.7	14.9	14.6	14.7
CH 6	2437	15.0							
CH 11	2462	14.2							

WLAN 2.4GHz 802.11ac-VHT20 Average Power (dBm)										
Power vs. Channel										
Channel	Frequency (MHz)	MCS Index	MCS1	MCS2	MCS3	MCS4	MCS5	MCS6	MCS7	MCS8
		MCS0								
CH 1	2412	13.8	14.6	14.6	14.8	14.9	14.7	14.6	14.8	14.7
CH 6	2437	15.0								
CH 11	2462	14.2								

<2.4GHz WLAN Antenna 2>

WLAN 2.4GHz 802.11b Average Power (dBm)					
Power vs. Channel					
Channel	Frequency (MHz)	Data Rate	2Mbps	5.5Mbps	11Mbps
		1Mbps			
CH 1	2412	15.1	15.0	15.2	15.1
CH 6	2437	15.3			
CH 11	2462	15.0			

WLAN 2.4GHz 802.11g Average Power (dBm)									
Power vs. Channel									
Channel	Frequency (MHz)	Data Rate	9Mbps	12Mbps	18Mbps	24Mbps	36Mbps	48Mbps	54Mbps
		6Mbps							
CH 1	2412	14.2	14.5	14.4	14.4	14.3	14.2	14.3	14.4
CH 6	2437	15.5							
CH 11	2462	14.3							

WLAN 2.4GHz 802.11n-HT20 Average Power (dBm)									
Power vs. Channel									
Channel	Frequency (MHz)	MCS Index	MCS1	MCS2	MCS3	MCS4	MCS5	MCS6	MCS7
		MCS0							
CH 1	2412	13.4	14.6	14.5	14.7	14.5	14.6	14.6	14.8
CH 6	2437	15.0							
CH 11	2462	14.5							

WLAN 2.4GHz 802.11ac-VHT20 Average Power (dBm)										
Power vs. Channel										
Channel	Frequency (MHz)	MCS Index	MCS1	MCS2	MCS3	MCS4	MCS5	MCS6	MCS7	MCS8
		MCS0								
CH 1	2412	13.2	14.6	14.6	14.8	14.9	14.7	14.8	14.7	14.5
CH 6	2437	15.0								
CH 11	2462	14.3								

<5GHz WLAN Total Power of Antenna 1+2>

WLAN 5GHz 802.11a Average Power (dBm)									
Power vs. Channel									
Channel	Frequency (MHz)	Data Rate	9Mbps	12Mbps	18Mbps	24Mbps	36Mbps	48Mbps	54Mbps
		6Mbps							
CH 36	5180	15.4	15.3	15.3	15.3	15.3	15.2	15.2	15.2
CH 40	5200	15.4							
CH 44	5220	15.4							
CH 48	5240	15.5							
CH 52	5260	15.3	15.1	15.1	15.0	15.0	14.9	15.0	14.9
CH 56	5280	15.1							
CH 60	5300	15.1							
CH 64	5320	15.1							
CH 100	5500	15.3	15.0	15.1	15.0	15.1	14.9	15.1	15.0
CH 104	5520	15.2							
CH 108	5540	15.2							
CH 112	5560	15.2							
CH 116	5580	15.2							
CH 132	5660	15.2							
CH 136	5680	15.1							
CH 140	5700	15.1							
CH 144	5720	15.3							
CH 149	5745	15.7	15.8	15.7	15.7	15.8	15.8	15.7	15.7
CH 153	5765	15.6							
CH 157	5785	15.5							
CH 161	5805	15.5							
CH 165	5825	16.0							

WLAN 5GHz 802.11n-HT20 Average Power (dBm)									
Power vs. Channel									
Channel	Frequency (MHz)	Data Rate	9Mbps	12Mbps	18Mbps	24Mbps	36Mbps	48Mbps	54Mbps
		6Mbps							
CH 36	5180	15.4	15.4	15.3	15.3	15.2	15.1	15.2	15.2
CH 40	5200	15.4							
CH 44	5220	15.3							
CH 48	5240	15.5							
CH 52	5260	15.2	15.0	15.1	15.1	15.1	14.9	15.1	15.1
CH 56	5280	15.2							
CH 60	5300	15.2							
CH 64	5320	15.2							
CH 100	5500	15.3	15.1	15.0	15.1	15.0	14.9	15.1	15.0
CH 104	5520	15.2							
CH 108	5540	15.2							
CH 112	5560	15.2							
CH 116	5580	15.3							
CH 132	5660	15.2							
CH 136	5680	15.2							
CH 140	5700	15.1							
CH 144	5720	15.3							
CH 149	5745	15.9	15.7	15.8	15.8	15.7	15.7	15.8	15.7
CH 153	5765	15.9							
CH 157	5785	16.0							
CH 161	5805	16.0							
CH 165	5825	16.0							

WLAN 5GHz 802.11n-HT40 Average Power (dBm)									
Power vs. Channel									
Channel	Frequency (MHz)	MCS Index	MCS1	MCS2	MCS3	MCS4	MCS5	MCS6	MCS7
		MCS0							
CH 38	5190	15.3	15.3	15.2	15.2	15.2	15.1	15.3	15.2
CH 46	5230	15.3							
CH 54	5270	14.9	14.8	14.8	14.7	14.6	14.7	14.7	14.5
CH 62	5310	15.0							
CH 102	5510	14.7	15.0	15.1	15.1	15.1	15.0	15.2	15.1
CH 110	5550	15.1							
CH 134	5670	15.2							
CH 142	5710	15.1							
CH 151	5755	15.1	15.5	15.3	15.4	15.4	15.4	15.2	15.2
CH 159	5795	15.6							

WLAN 5GHz 802.11ac-VHT20 Average Power (dBm)										
Power vs. Channel										
Channel	Frequency (MHz)	MCS Index	MCS1	MCS2	MCS3	MCS4	MCS5	MCS6	MCS7	MCS8
		MCS0								
CH 36	5180	15.4	15.3	15.4	15.4	15.3	15.2	15.3	15.2	15.1
CH 40	5200	15.4								
CH 44	5220	15.3								
CH 48	5240	15.5								
CH 52	5260	15.2	15.1	15.1	15.1	15.1	14.9	14.9	15.0	15.0
CH 56	5280	15.2								
CH 60	5300	15.3								
CH 64	5320	15.2								
CH 100	5500	15.3	15.1	15.1	15.1	15.1	15.0	15.0	15.0	15.0
CH 104	5520	15.2								
CH 108	5540	15.2								
CH 112	5560	15.1								
CH 116	5580	15.2								
CH 132	5660	15.2								
CH 136	5680	15.1								
CH 140	5700	15.1								
CH 144	5720	15.3								
CH 149	5745	16.0	15.7	15.8	15.9	15.7	15.8	15.7	15.6	15.7
CH 153	5765	15.8								
CH 157	5785	15.8								
CH 161	5805	15.8								
CH 165	5825	15.8								

WLAN 5GHz 802.11ac-VHT40 Average Power (dBm)											
Power vs. Channel											
Channel	Frequency (MHz)	MCS Index	MCS1	MCS2	MCS3	MCS4	MCS5	MCS6	MCS7	MCS8	MCS9
		MCS0									
CH 38	5190	15.3	15.3	15.3	15.1	15.1	15.1	15.2	15.3	15.2	15.1
CH 46	5230	15.4									
CH 54	5270	14.9	14.8	14.8	14.6	14.6	14.6	14.5	14.5	14.5	14.5
CH 62	5310	14.7									
CH 102	5510	14.2	15.1	15.0	15.1	14.9	15.1	15.2	15.1	14.9	14.9
CH 110	5550	15.1									
CH 134	5670	15.2									
CH 142	5710	15.1									
CH 151	5755	15.1	15.5	15.4	15.4	15.4	15.6	15.3	15.3	15.3	15.4
CH 159	5795	15.7									

WLAN 5GHz 802.11ac-VHT80 Average Power (dBm)											
Power vs. Channel											
Channel	Frequency (MHz)	MCS Index	MCS1	MCS2	MCS3	MCS4	MCS5	MCS6	MCS7	MCS8	MCS9
		MCS0									
CH 42	5210	15.4	15.2	15.2	15.1	15.1	15.1	15.1	15.0	15.2	15.0
CH 58	5290	15.3	15.2	15.1	15.1	15.0	15.0	15.2	15.1	15.1	15.1
CH 106	5530	15.2	14.9	14.9	14.9	14.8	14.8	14.9	14.9	14.9	14.8
CH 138	5690	15.1									
CH 155	5775	16.0	15.8	15.7	15.8	15.8	15.7	15.7	15.7	15.7	15.6

<5GHz WLAN Antenna 1>

WLAN 5GHz 802.11a Average Power (dBm)									
Power vs. Channel									
Channel	Frequency (MHz)	Data Rate	9Mbps	12Mbps	18Mbps	24Mbps	36Mbps	48Mbps	54Mbps
		6Mbps							
CH 36	5180	12.5	12.2	12.1	12.2	12.3	12.3	12.2	12.3
CH 40	5200	12.5							
CH 44	5220	12.5							
CH 48	5240	12.5							
CH 52	5260	13.0	12.9	12.8	12.5	12.8	12.7	12.6	12.6
CH 56	5280	12.6							
CH 60	5300	12.6							
CH 64	5320	12.6							
CH 100	5500	13.0	12.6	12.6	12.5	12.8	12.7	12.9	12.8
CH 104	5520	12.9							
CH 108	5540	12.9							
CH 112	5560	12.9							
CH 116	5580	13.0							
CH 132	5660	12.8							
CH 136	5680	12.7							
CH 140	5700	12.6							
CH 144	5720	13.0							
CH 149	5745	12.4	12.6	12.5	12.6	12.7	12.8	12.9	12.8
CH 153	5765	12.6							
CH 157	5785	12.1							
CH 161	5805	12.6							
CH 165	5825	13.0							

WLAN 5GHz 802.11n-HT20 Average Power (dBm)									
Power vs. Channel									
Channel	Frequency (MHz)	Data Rate	9Mbps	12Mbps	18Mbps	24Mbps	36Mbps	48Mbps	54Mbps
		6Mbps							
CH 36	5180	12.5	12.4	12.3	12.4	12.2	12.0	12.1	12.3
CH 40	5200	12.4							
CH 44	5220	12.5							
CH 48	5240	12.4							
CH 52	5260	12.7	12.6	12.7	12.8	12.8	12.6	12.8	12.9
CH 56	5280	12.8							
CH 60	5300	12.8							
CH 64	5320	13.0							
CH 100	5500	13.0	12.8	12.6	12.7	12.7	12.6	12.9	12.8
CH 104	5520	12.9							
CH 108	5540	12.9							
CH 112	5560	12.9							
CH 116	5580	12.9							
CH 132	5660	12.9							
CH 136	5680	12.9							
CH 140	5700	12.6							
CH 144	5720	13.0							
CH 149	5745	12.8	12.6	12.8	12.9	12.8	12.7	12.8	12.6
CH 153	5765	12.8							
CH 157	5785	13.0							
CH 161	5805	13.0							
CH 165	5825	13.0							

WLAN 5GHz 802.11n-HT40 Average Power (dBm)									
Power vs. Channel									
Channel	Frequency (MHz)	MCS Index	MCS1	MCS2	MCS3	MCS4	MCS5	MCS6	MCS7
		MCS0							
CH 38	5190	12.4	12.3	12.1	12.2	12.1	12.0	12.2	12.2
CH 46	5230	12.1							
CH 54	5270	12.6	12.4	12.5	12.4	12.3	12.2	12.3	12.1
CH 62	5310	12.7							
CH 102	5510	12.4	12.6	12.8	12.9	12.8	12.7	12.8	12.7
CH 110	5550	12.6							
CH 134	5670	13.0							
CH 142	5710	12.6							
CH 151	5755	11.9	12.4	12.3	12.3	12.4	12.2	12.2	12.1
CH 159	5795	12.5							

WLAN 5GHz 802.11ac-VHT20 Average Power (dBm)										
Power vs. Channel										
Channel	Frequency (MHz)	MCS Index	MCS1	MCS2	MCS3	MCS4	MCS5	MCS6	MCS7	MCS8
		MCS0								
CH 36	5180	12.5	12.3	12.4	12.4	12.3	12.2	12.4	12.1	12.0
CH 40	5200	12.4								
CH 44	5220	12.5								
CH 48	5240	12.4								
CH 52	5260	12.8	12.8	12.6	12.7	12.8	12.5	12.5	12.6	12.7
CH 56	5280	12.8								
CH 60	5300	12.9								
CH 64	5320	12.9								
CH 100	5500	13.0	12.8	12.8	12.9	12.7	12.6	12.5	12.8	12.6
CH 104	5520	12.8								
CH 108	5540	12.8								
CH 112	5560	12.8								
CH 116	5580	12.8								
CH 132	5660	12.8								
CH 136	5680	12.8								
CH 140	5700	12.6								
CH 144	5720	13.0								
CH 149	5745	13.0	12.8	12.8	12.9	12.7	12.7	12.6	12.5	12.8
CH 153	5765	12.6								
CH 157	5785	12.5								
CH 161	5805	12.6								
CH 165	5825	12.5								

WLAN 5GHz 802.11ac-VHT40 Average Power (dBm)											
Power vs. Channel											
Channel	Frequency (MHz)	MCS Index	MCS1	MCS2	MCS3	MCS4	MCS5	MCS6	MCS7	MCS8	MCS9
		MCS0									
CH 38	5190	12.4	12.3	12.3	12.2	12.0	12.1	12.1	12.2	12.3	12.0
CH 46	5230	12.3									
CH 54	5270	12.6	12.5	12.5	12.4	12.3	12.2	12.2	12.1	12.3	12.1
CH 62	5310	12.2									
CH 102	5510	11.9	12.8	12.6	12.8	12.7	12.9	12.8	12.8	12.6	12.7
CH 110	5550	12.6									
CH 134	5670	13.0									
CH 142	5710	12.6									
CH 151	5755	11.9	12.3	12.3	12.2	12.1	12.4	12.3	12.2	12.2	12.1
CH 159	5795	12.5									

WLAN 5GHz 802.11ac-VHT80 Average Power (dBm)											
Power vs. Channel											
Channel	Frequency (MHz)	MCS Index	MCS1	MCS2	MCS3	MCS4	MCS5	MCS6	MCS7	MCS8	MCS9
		MCS0									
CH 42	5210	12.5	12.4	12.3	12.1	12.2	12.2	12.3	12.1	12.4	12.3
CH 58	5290	13.0	12.8	12.7	12.7	12.6	12.7	12.8	12.8	12.9	12.8
CH 106	5530	13.0	12.7	12.6	12.7	12.5	12.6	12.8	12.8	12.8	12.7
CH 138	5690	12.9									
CH 155	5775	13.0	12.9	12.9	12.8	12.8	12.7	12.5	12.6	12.6	12.5

<5GHz WLAN Antenna 2>

WLAN 5GHz 802.11a Average Power (dBm)									
Power vs. Channel									
Channel	Frequency (MHz)	Data Rate	9Mbps	12Mbps	18Mbps	24Mbps	36Mbps	48Mbps	54Mbps
		6Mbps							
CH 36	5180	12.2	12.3	12.4	12.3	12.3	12.1	12.2	12.0
CH 40	5200	12.3							
CH 44	5220	12.2							
CH 48	5240	12.5							
CH 52	5260	11.5	11.2	11.2	11.3	11.1	11.0	11.2	11.1
CH 56	5280	11.4							
CH 60	5300	11.5							
CH 64	5320	11.4							
CH 100	5500	11.5	11.3	11.4	11.3	11.2	11.0	11.2	11.1
CH 104	5520	11.3							
CH 108	5540	11.3							
CH 112	5560	11.4							
CH 116	5580	11.3							
CH 132	5660	11.4							
CH 136	5680	11.3							
CH 140	5700	11.5							
CH 144	5720	11.5							
CH 149	5745	12.9	12.9	12.9	12.8	12.8	12.7	12.5	12.6
CH 153	5765	12.6							
CH 157	5785	12.8							
CH 161	5805	12.4							
CH 165	5825	13.0							

WLAN 5GHz 802.11n-HT20 Average Power (dBm)									
Power vs. Channel									
Channel	Frequency (MHz)	Data Rate	9Mbps	12Mbps	18Mbps	24Mbps	36Mbps	48Mbps	54Mbps
		6Mbps							
CH 36	5180	12.2	12.4	12.3	12.1	12.2	12.2	12.3	12.1
CH 40	5200	12.3							
CH 44	5220	12.0							
CH 48	5240	12.5							
CH 52	5260	11.5	11.3	11.4	11.3	11.2	11.0	11.2	11.1
CH 56	5280	11.4							
CH 60	5300	11.5							
CH 64	5320	11.3							
CH 100	5500	11.5	11.2	11.2	11.3	11.1	11.0	11.2	11.1
CH 104	5520	11.4							
CH 108	5540	11.3							
CH 112	5560	11.3							
CH 116	5580	11.5							
CH 132	5660	11.4							
CH 136	5680	11.3							
CH 140	5700	11.5							
CH 144	5720	11.4							
CH 149	5745	13.0	12.8	12.7	12.7	12.6	12.7	12.8	12.8
CH 153	5765	13.0							
CH 157	5785	13.0							
CH 161	5805	13.0							
CH 165	5825	13.0							

WLAN 5GHz 802.11n-HT40 Average Power (dBm)									
Power vs. Channel									
Channel	Frequency (MHz)	MCS Index	MCS1	MCS2	MCS3	MCS4	MCS5	MCS6	MCS7
		MCS0							
CH 38	5190	12.1	12.3	12.3	12.1	12.2	12.2	12.3	12.1
CH 46	5230	12.4							
CH 54	5270	11.1	11.0	10.9	10.9	10.8	11.0	10.9	10.8
CH 62	5310	11.1							
CH 102	5510	10.8	11.3	11.2	11.2	11.3	11.1	11.4	11.3
CH 110	5550	11.5							
CH 134	5670	11.1							
CH 142	5710	11.5							
CH 151	5755	12.3	12.5	12.3	12.4	12.4	12.5	12.2	12.3
CH 159	5795	12.6							

WLAN 5GHz 802.11ac-VHT20 Average Power (dBm)										
Power vs. Channel										
Channel	Frequency (MHz)	MCS Index	MCS1	MCS2	MCS3	MCS4	MCS5	MCS6	MCS7	MCS8
		MCS0								
CH 36	5180	12.2	12.3	12.3	12.4	12.2	12.1	12.1	12.3	12.2
CH 40	5200	12.3								
CH 44	5220	12.1								
CH 48	5240	12.5								
CH 52	5260	11.5	11.3	11.4	11.3	11.3	11.2	11.1	11.2	11.1
CH 56	5280	11.4								
CH 60	5300	11.5								
CH 64	5320	11.4								
CH 100	5500	11.5	11.3	11.2	11.2	11.3	11.2	11.4	11.1	11.3
CH 104	5520	11.4								
CH 108	5540	11.4								
CH 112	5560	11.3								
CH 116	5580	11.5								
CH 132	5660	11.4								
CH 136	5680	11.3								
CH 140	5700	11.5								
CH 144	5720	11.4								
CH 149	5745	13.0	12.6	12.7	12.8	12.7	12.9	12.8	12.7	12.6
CH 153	5765	13.0								
CH 157	5785	13.0								
CH 161	5805	13.0								
CH 165	5825	13.0								

WLAN 5GHz 802.11ac-VHT40 Average Power (dBm)											
Power vs. Channel											
Channel	Frequency (MHz)	MCS Index	MCS1	MCS2	MCS3	MCS4	MCS5	MCS6	MCS7	MCS8	MCS9
		MCS0									
CH 38	5190	12.1	12.3	12.3	12.0	12.1	12.1	12.2	12.3	12.0	12.1
CH 46	5230	12.4									
CH 54	5270	11.1	11.0	11.0	10.6	10.8	10.9	10.7	10.7	10.6	10.7
CH 62	5310	11.0									
CH 102	5510	10.4	11.3	11.3	11.2	11.0	11.1	11.4	11.2	11.1	11.0
CH 110	5550	11.5									
CH 134	5670	11.2									
CH 142	5710	11.5									
CH 151	5755	12.3	12.6	12.5	12.6	12.7	12.7	12.2	12.3	12.4	12.6
CH 159	5795	12.8									

WLAN 5GHz 802.11ac-VHT80 Average Power (dBm)											
Power vs. Channel											
Channel	Frequency (MHz)	MCS Index	MCS1	MCS2	MCS3	MCS4	MCS5	MCS6	MCS7	MCS8	MCS9
		MCS0									
CH 42	5210	12.2	12.0	12.1	12.1	12.0	11.9	11.9	11.8	11.9	11.7
CH 58	5290	11.5	11.4	11.3	11.3	11.2	11.2	11.4	11.2	11.1	11.3
CH 106	5530	11.2	11.0	11.1	11.0	10.9	10.7	10.7	10.8	10.8	10.7
CH 138	5690	11.1									
CH 155	5775	13.0	12.6	12.5	12.8	12.7	12.7	12.8	12.7	12.8	12.6

<2.4GHz Bluetooth>

General Note:

1. For 2.4GHz Bluetooth SAR testing was selected 1Mbps, due to its highest average power.
2. The duty factor was used theoretical 83.3% perform Bluetooth SAR testing.

Mode	Channel	Frequency (MHz)	Bluetooth Average power (dBm)		
			1Mbps	2Mbps	3Mbps
v3.0+EDR	CH 00	2402	6.8	3.9	3.8
	CH 39	2441	8.7	5.5	5.6
	CH 78	2480	8.9	5.3	5.2

Mode	Channel	Frequency (MHz)	Average power (dBm)
			GFSK
v4.0-LE	CH 00	2402	4.5
	CH 19	2440	5.8
	CH 39	2480	5.2

13. Exposure Position Conditions

<Distance from the antenna to the edge>

General Note:

1. The detail antenna locations please refer to setup photo.
2. This device overall diagonal dimension is 272mm, and according to KDB 616217 D04v01r01, if the diagonal is greater than 200mm, SAR evaluation for the front surface of tablet display screens are generally not necessary.

Exposure Position	Bottom Face	Edge1	Edge2	Edge3	Edge4
WLAN Antenna1 to the Edge distance (mm)	< 5 mm	< 5 mm	163 mm	138 mm	49 mm
WLAN Antenna2 to the Edge distance (mm)	< 5 mm	116 mm	216 mm	21 mm	< 5 mm

<SAR test exclusion table>

General Note:

1. The below table, when the distance is < 50 mm exclusion threshold is "Ratio", when the distance is > 50 mm exclusion threshold is "mW"
2. Maximum power is the source-based time-average power and represents the maximum RF output power among production units
3. Per KDB 447498 D01v05r02, for larger devices, the test separation distance of adjacent edge configuration is determined by the closest separation between the antenna and the user.
4. Per KDB 447498 D01v05r02, standalone SAR test exclusion threshold is applied; If the test separation distance is < 5mm, 5mm is used to determine SAR exclusion threshold.
5. Per KDB 447498 D01v05r02, the 1-g and 10-g SAR test exclusion thresholds for 100 MHz to 6 GHz at *test separation distances* ≤ 50 mm are determined by:

   [(*max. power of channel, including tune-up tolerance, mW*)/(*min. test separation distance, mm*)] ·[$\sqrt{f(GHz)}$] ≤ 3.0 for 1-g SAR and ≤ 7.5 for 10-g extremity SAR

   - f(GHz) is the RF channel transmit frequency in GHz
   - Power and distance are rounded to the nearest mW and mm before calculation
   - The result is rounded to one decimal place for comparison
6. Per KDB 447498 D01v05r02, at 100 MHz to 6 GHz and for *test separation distances* > 50 mm, the SAR test exclusion threshold is determined according to the following

   a) [Threshold at 50 mm in step 1) + (test separation distance - 50 mm)·(f(MHz)/150)] mW, at 100 MHz to 1500 MHz

   b) [Threshold at 50 mm in step 1) + (test separation distance - 50 mm)·10] mW at > 1500 MHz and ≤ 6 GHz

Exposure Position	Wireless Interface	802.11b Ant 1	802.11b Ant 2	802.11a Ant 1	802.11a Ant 2
	Calculated Frequency	2462MHz	2462MHz	5825MHz	5825MHz
	Maximum power (dBm)	15.5	15.5	13	13
	Maximum rated power(mW)	35	35	20	20
Bottom Face	Separation distance(mm)	< 5	< 5	< 5	< 5
	exclusion threshold	11	11	10	10
	Testing required?	**Yes**	**Yes**	**Yes**	**Yes**
Edge 1	Separation distance(mm)	< 5	116.0	< 5	116.0
	exclusion threshold	11	756	10	722
	Testing required?	**Yes**	**No**	**Yes**	**No**
Edge 2	Separation distance(mm)	163.0	216.0	163.0	216.0
	exclusion threshold	1226	1756	1192	1722
	Testing required?	**No**	**No**	**No**	**No**
Edge 3	Separation distance(mm)	138.0	21.0	138.0	21.0
	exclusion threshold	976	3	942	2
	Testing required?	**No**	**No**	**No**	**No**
Edge 4	Separation distance(mm)	49.0	< 5	49.0	< 5
	exclusion threshold	1	11	1	10
	Testing required?	**No**	**Yes**	**No**	**Yes**

14. SAR Test Results

General Note:

1. Per KDB 447498 D01v05r02, the reported SAR is the measured SAR value adjusted for maximum tune-up tolerance.
   a. Tune-up scaling Factor = tune-up limit power (mW) / EUT RF power (mW), where tune-up limit is the maximum rated power among all production units.
   b. For WLAN: Reported SAR(W/kg)= Measured SAR(W/kg)*Tune-up Scaling Factor
2. Per KDB 447498 D01v05r02, for each exposure position, testing of other required channels within the operating mode of a frequency band is not required when the reported 1-g or 10-g SAR for the mid-band or highest output power channel is:
   - ≤ 0.8 W/kg or 2.0 W/kg, for 1-g or 10-g respectively, when the transmission band is ≤ 100 MHz
   - ≤ 0.6 W/kg or 1.5 W/kg, for 1-g or 10-g respectively, when the transmission band is between 100 MHz and 200 MHz
   - ≤ 0.4 W/kg or 1.0 W/kg, for 1-g or 10-g respectively, when the transmission band is ≥ 200 MHz
3. During the SAR testing, the additional separation between EUT and the phantom surface introduced by the protrusion is <5mm, and the reported SAR with the protrusions in place is < 1.2 W/kg, additional consideration of test setup is not required. Detailed information is included in the test setup photo exhibit.

14.1 Body SAR

<WLAN SAR>

Plot No.	Band	Mode	Test Position	Gap (cm)	Antenna	Ch.	Freq. (MHz)	Average Power (dBm)	Tune-Up Limit (dBm)	Tune-up Scaling Factor	Power Drift (dB)	Measured 1g SAR (W/kg)	Reported 1g SAR (W/kg)
	WLAN2.4GHz	802.11b 1Mbps	Bottom Face	0cm	Ant 1	6	2437	15.2	15.5	1.072	-0.04	0.880	0.943
	WLAN2.4GHz	802.11b 1Mbps	Bottom Face	0cm	Ant 1	1	2412	15.2	15.5	1.072	-0.01	0.914	0.979
	WLAN2.4GHz	802.11b 1Mbps	Bottom Face	0cm	Ant 1	11	2462	15.0	15.5	1.122	-0.01	0.837	0.939
	WLAN2.4GHz	802.11b 1Mbps	Bottom Face - Slant of Edge1	0cm	Ant 1	6	2437	15.2	15.5	1.072	-0.13	1.040	1.114
	WLAN2.4GHz	802.11b 1Mbps	Bottom Face - Slant of Edge1	0cm	Ant 1	1	2412	15.2	15.5	1.072	0.01	1.100	1.179
	WLAN2.4GHz	802.11b 1Mbps	Bottom Face - Slant of Edge1	0cm	Ant 1	11	2462	15.0	15.5	1.122	0.01	0.964	1.082
01	WLAN2.4GHz	802.11n-HT20 MCS0	Bottom Face - Slant of Edge1	0cm	Ant 1	6	2437	15.0	15.5	1.122	-0.12	1.060	**1.189**
	WLAN2.4GHz	802.11n-HT20 MCS0	Bottom Face - Slant of Edge1	0cm	Ant 1	1	2412	13.3	13.5	1.047	-0.11	0.593	0.621
	WLAN2.4GHz	802.11n-HT20 MCS0	Bottom Face - Slant of Edge1	0cm	Ant 1	11	2462	14.2	14.5	1.072	-0.06	0.654	0.701
	WLAN2.4GHz	802.11ac-VHT20	Bottom Face - Slant of Edge1	0cm	Ant 1	6	2437	15.0	15.5	1.122	0.02	1.060	1.189
	WLAN2.4GHz	802.11ac-VHT20	Bottom Face - Slant of Edge1	0cm	Ant 1	1	2412	13.8	14.0	1.047	-0.11	0.591	0.619
	WLAN2.4GHz	802.11ac-VHT20	Bottom Face - Slant of Edge1	0cm	Ant 1	11	2462	14.2	14.5	1.072	-0.04	0.646	0.692
	WLAN2.4GHz	802.11b 1Mbps	Edge 1	0cm	Ant 1	6	2437	15.2	15.5	1.072	-0.07	0.710	0.761
	WLAN2.4GHz	802.11b 1Mbps	Bottom Face	0cm	Ant 2	6	2437	15.3	15.5	1.047	0.02	0.465	0.487
	WLAN2.4GHz	802.11n-HT20 MCS0	Bottom Face	0cm	Ant 2	6	2437	15.0	15.5	1.122	-0.1	0.436	0.489
	WLAN2.4GHz	802.11ac-VHT20 MCS0	Bottom Face	0cm	Ant 2	6	2437	15.0	15.5	1.122	-0.05	0.413	0.463
	WLAN2.4GHz	802.11b 1Mbps	Bottom Face - Slant of Edge4	0cm	Ant 2	6	2437	15.3	15.5	1.047	-0.12	0.430	0.450
	WLAN2.4GHz	802.11b 1Mbps	Edge 4	0cm	Ant 2	6	2437	15.3	15.5	1.047	-0.17	0.156	0.163

Plot No.	Band	Mode	Test Position	Gap (cm)	Antenna	Ch.	Freq. (MHz)	Average Power (dBm)	Tune-Up Limit (dBm)	Tune-up Scaling Factor	Power Drift (dB)	Measured 1g SAR (W/kg)	Reported 1g SAR (W/kg)
	WLAN5GHz	802.11a 6Mbps	Bottom Face	0cm	Ant 1	44	5220	12.5	12.5	1.000	0.02	0.262	0.262
	WLAN5GHz	802.11a 6Mbps	Bottom Face - Slant of Edge1	0cm	Ant 1	44	5220	12.5	12.5	1.000	-0.11	0.342	0.342
	WLAN5GHz	802.11a 6Mbps	Edge 1	0cm	Ant 1	44	5220	12.5	12.5	1.000	-0.02	0.371	0.371
	WLAN5GHz	802.11n-HT40 MCS0	Edge 1	0cm	Ant 1	38	5190	12.4	12.5	1.023	-0.04	0.310	0.317
	WLAN5GHz	802.11ac-VHT80 MCS0	Edge 1	0cm	Ant 1	42	5210	12.5	12.5	1.000	0.03	0.320	0.320
	WLAN5GHz	802.11a 6Mbps	Bottom Face	0cm	Ant 2	48	5240	12.5	12.5	1.000	-0.04	0.708	0.708
	WLAN5GHz	802.11a 6Mbps	Bottom Face - Slant of Edge4	0cm	Ant 2	48	5240	12.5	12.5	1.000	-0.17	1.110	1.110
	WLAN5GHz	802.11a 6Mbps	Bottom Face - Slant of Edge4	0cm	Ant 2	40	5200	12.3	12.5	1.047	-0.07	1.060	1.110
02	WLAN5GHz	802.11n-HT40 MCS0	Bottom Face - Slant of Edge4	0cm	Ant 2	46	5230	12.4	12.5	1.023	-0.08	1.270	**1.300**
	WLAN5GHz	802.11n-HT40 MCS0	Bottom Face - Slant of Edge4	0cm	Ant 2	38	5180	12.1	12.5	1.096	0.03	1.070	1.173
	WLAN5GHz	802.11ac-VHT80 MCS0	Bottom Face - Slant of Edge4	0cm	Ant 2	42	5210	12.2	12.5	1.072	-0.06	1.110	1.189
	WLAN5GHz	802.11a 6Mbps	Edge 4	0cm	Ant 2	48	5240	12.5	12.5	1.000	-0.02	0.911	0.911
	WLAN5GHz	802.11a 6Mbps	Edge 4	0cm	Ant 2	40	5200	12.3	12.5	1.047	-0.16	0.864	0.905
	WLAN5GHz	802.11a 6Mbps	Bottom Face	0cm	Ant 1	52	5260	13.0	13.0	1.000	-0.11	0.409	0.409
	WLAN5GHz	802.11a 6Mbps	Bottom Face - Slant of Edge1	0cm	Ant 1	52	5260	13.0	13.0	1.000	-0.06	0.507	0.507
	WLAN5GHz	802.11a 6Mbps	Edge 1	0cm	Ant 1	52	5260	13.0	13.0	1.000	-0.06	0.512	0.512
	WLAN5GHz	802.11n-HT40 MCS0	Edge 1	0cm	Ant 1	54	5270	12.6	13.0	1.096	0.07	0.357	0.391
	WLAN5GHz	802.11ac-VHT80 MCS0	Edge 1	0cm	Ant 1	58	5290	13.0	13.0	1.000	0.04	0.330	0.330
	WLAN5GHz	802.11a 6Mbps	Bottom Face	0cm	Ant 2	60	5300	11.5	11.5	1.000	-0.09	0.670	0.670
	WLAN5GHz	802.11a 6Mbps	Bottom Face - Slant of Edge4	0cm	Ant 2	60	5300	11.5	11.5	1.000	-0.08	0.989	0.989
03	WLAN5GHz	802.11a 6Mbps	Bottom Face - Slant of Edge4	0cm	Ant 2	52	5260	11.5	11.5	1.000	-0.01	1.290	**1.290**
	WLAN5GHz	802.11n-HT40 MCS0	Bottom Face - Slant of Edge4	0cm	Ant 2	54	5270	11.1	11.5	1.096	-0.16	1.060	1.162
	WLAN5GHz	802.11n-HT40 MCS0	Bottom Face - Slant of Edge4	0cm	Ant 2	62	5310	11.1	11.5	1.096	-0.08	1.100	1.206
	WLAN5GHz	802.11ac-VHT80 MCS0	Bottom Face - Slant of Edge4	0cm	Ant 2	58	5290	11.5	11.5	1.000	-0.06	1.080	1.080
	WLAN5GHz	802.11a 6Mbps	Edge 4	0cm	Ant 2	60	5300	11.5	11.5	1.000	-0.07	0.892	0.892
	WLAN5GHz	802.11a 6Mbps	Edge 4	0cm	Ant 2	52	5260	11.5	11.5	1.000	-0.06	1.070	1.070
	WLAN5GHz	802.11a 6Mbps	Bottom Face	0cm	Ant 1	100	5500	13.0	13.0	1.000	-0.03	0.355	0.355
	WLAN5GHz	802.11a 6Mbps	Bottom Face - Slant of Edge1	0cm	Ant 1	100	5500	13.0	13.0	1.000	-0.09	0.356	0.356
	WLAN5GHz	802.11n-HT40 MCS0	Bottom Face - Slant of Edge1	0cm	Ant 1	134	5670	13.0	13.0	1.000	-0.16	0.625	0.625
	WLAN5GHz	802.11n-HT40 MCS0	Bottom Face - Slant of Edge1	0cm	Ant 1	110	5550	12.6	13.0	1.096	-0.07	0.352	0.386
	WLAN5GHz	802.11ac-VHT80 MCS0	Bottom Face - Slant of Edge1	0cm	Ant 1	106	5530	13.0	13.0	1.000	-0.07	0.338	0.338
	WLAN5GHz	802.11a 6Mbps	Edge 1	0cm	Ant 1	100	5500	13.0	13.0	1.000	-0.03	0.298	0.298
	WLAN5GHz	802.11a 6Mbps	Bottom Face	0cm	Ant 2	140	5700	11.5	11.5	1.000	-0.11	0.740	0.740
	WLAN5GHz	802.11a 6Mbps	Bottom Face	0cm	Ant 2	100	5500	11.5	11.5	1.000	-0.14	0.904	0.904
	WLAN5GHz	802.11a 6Mbps	Bottom Face	0cm	Ant 2	112	5560	11.4	11.5	1.023	-0.13	0.855	0.875
	WLAN5GHz	802.11a 6Mbps	Bottom Face - Slant of Edge4	0cm	Ant 2	140	5700	11.5	11.5	1.000	-0.06	0.956	0.956
	WLAN5GHz	802.11a 6Mbps	Bottom Face - Slant of Edge4	0cm	Ant 2	100	5500	11.5	11.5	1.000	0.14	1.120	1.120
	WLAN5GHz	802.11a 6Mbps	Bottom Face - Slant of Edge4	0cm	Ant 2	112	5560	11.4	11.5	1.023	0.12	1.160	1.187
	WLAN5GHz	802.11n-HT40 MCS0	Bottom Face - Slant of Edge4	0cm	Ant 2	110	5550	11.5	11.5	1.000	-0.06	1.210	1.210
04	WLAN5GHz	802.11n-HT40 MCS0	Bottom Face - Slant of Edge4	0cm	Ant 2	142	5710	11.5	11.5	1.000	0.07	1.250	**1.250**
	WLAN5GHz	802.11ac-VHT80 MCS0	Bottom Face - Slant of Edge4	0cm	Ant 2	106	5530	11.2	11.5	1.072	-0.04	0.940	1.007
	WLAN5GHz	802.11ac-VHT80 MCS0	Bottom Face - Slant of Edge4	0cm	Ant 2	138	5690	11.1	11.5	1.096	0.14	1.060	1.162
	WLAN5GHz	802.11a 6Mbps	Edge 4	0cm	Ant 2	140	5700	11.5	11.5	1.000	-0.1	0.790	0.790
	WLAN5GHz	802.11a 6Mbps	Edge 4	0cm	Ant 2	100	5500	11.5	11.5	1.000	-0.05	0.907	0.907
	WLAN5GHz	802.11a 6Mbps	Edge 4	0cm	Ant 2	112	5560	11.4	11.5	1.023	-0.08	0.899	0.920

Plot No.	Band	Mode	Test Position	Gap (cm)	Antenna	Ch.	Freq. (MHz)	Average Power (dBm)	Tune-Up Limit (dBm)	Tune-up Scaling Factor	Power Drift (dB)	Measured 1g SAR (W/kg)	Reported 1g SAR (W/kg)
	WLAN5GHz	802.11a 6Mbps	Bottom Face	0cm	Ant 1	165	5825	13.0	13.0	1.000	-0.05	0.814	0.814
	WLAN5GHz	802.11a 6Mbps	Bottom Face	0cm	Ant 1	153	5765	12.6	13.0	1.096	-0.14	0.684	0.750
	WLAN5GHz	802.11a 6Mbps	Bottom Face	0cm	Ant 1	157	5785	12.1	13.0	1.230	-0.01	0.700	0.861
	WLAN5GHz	802.11a 6Mbps	Bottom Face - Slant of Edge1	0cm	Ant 1	165	5825	13.0	13.0	1.000	0	1.020	1.020
	WLAN5GHz	802.11a 6Mbps	Bottom Face - Slant of Edge1	0cm	Ant 1	153	5765	12.6	13.0	1.096	0.18	0.716	0.785
	WLAN5GHz	802.11a 6Mbps	Bottom Face - Slant of Edge1	0cm	Ant 1	157	5785	12.1	13.0	1.230	-0.01	0.746	0.918
	WLAN5GHz	802.11n-HT40 MCS0	Bottom Face - Slant of Edge1	0cm	Ant 1	151	5755	11.9	12.5	1.148	-0.09	0.609	0.699
	WLAN5GHz	802.11n-HT40 MCS0	Bottom Face - Slant of Edge1	0cm	Ant 1	159	5795	12.5	13.0	1.122	-0.04	0.672	0.754
	WLAN5GHz	802.11ac-VHT80 MCS0	Bottom Face - Slant of Edge1	0cm	Ant 1	155	5775	13.0	13.0	1.000	-0.09	0.627	0.627
	WLAN5GHz	802.11a 6Mbps	Edge 1	0cm	Ant 1	165	5825	13.0	13.0	1.000	-0.07	0.349	0.349
	WLAN5GHz	802.11a 6Mbps	Bottom Face	0cm	Ant 2	165	5825	13.0	13.0	1.000	-0.14	0.725	0.725
	WLAN5GHz	802.11a 6Mbps	Bottom Face	0cm	Ant 2	149	5745	12.9	13.0	1.023	0.07	0.990	1.013
	WLAN5GHz	802.11a 6Mbps	Bottom Face	0cm	Ant 2	157	5785	12.8	13.0	1.047	-0.14	1.030	1.079
	WLAN5GHz	802.11a 6Mbps	Bottom Face - Slant of Edge4	0cm	Ant 2	165	5825	13.0	13.0	1.000	-0.13	0.957	0.957
	WLAN5GHz	802.11a 6Mbps	Bottom Face - Slant of Edge4	0cm	Ant 2	149	5745	12.9	13.0	1.023	0.17	1.240	1.269
05	WLAN5GHz	802.11a 6Mbps	Bottom Face - Slant of Edge4	0cm	Ant 2	157	5785	12.8	13.0	1.047	-0.05	1.220	**1.277**
	WLAN5GHz	802.11n-HT40 MCS0	Bottom Face - Slant of Edge4	0cm	Ant 2	151	5755	12.3	12.5	1.047	-0.11	1.110	1.162
	WLAN5GHz	802.11n-HT40 MCS0	Bottom Face - Slant of Edge4	0cm	Ant 2	159	5795	12.6	13.0	1.096	-0.09	1.080	1.184
	WLAN5GHz	802.11ac-VHT80 MCS0	Bottom Face - Slant of Edge4	0cm	Ant 2	155	5775	13.0	13.0	1.000	-0.09	1.070	1.070
	WLAN5GHz	802.11a 6Mbps	Edge 4	0cm	Ant 2	165	5825	13.0	13.0	1.000	-0.06	0.686	0.686
	WLAN5GHz	802.11a 6Mbps	Edge 4	0cm	Ant 2	149	5745	12.9	13.0	1.023	-0.16	1.070	1.095
	WLAN5GHz	802.11a 6Mbps	Edge 4	0cm	Ant 2	157	5785	12.8	13.0	1.047	-0.14	1.090	1.141

<Bluetooth SAR>

Plot No.	Band	Mode	Test Position	Gap (cm)	Antenna	Ch.	Freq. (MHz)	Average Power (dBm)	Tune-Up Limit (dBm)	Tune-up Scaling Factor	Power Drift (dB)	Measured 1g SAR (W/kg)	Reported 1g SAR (W/kg)
	Bluetooth	1Mbps	Bottom Face	0cm	Ant 1	78	2480	8.9	9.5	1.148	-0.18	0.014	0.016
	Bluetooth	1Mbps	Bottom Face - Slant of Edge1	0cm	Ant 1	78	2480	8.9	9.5	1.148	-0.14	0.019	0.022
06	Bluetooth	1Mbps	Bottom Face - Slant of Edge1	0cm	Ant 1	0	2402	6.8	9.5	1.862	-0.02	0.064	**0.119**
	Bluetooth	1Mbps	Bottom Face - Slant of Edge1	0cm	Ant 1	39	2441	8.7	9.5	1.202	-0.05	0.043	0.052
	Bluetooth	1Mbps	Edge 1	0cm	Ant 1	78	2480	8.9	9.5	1.148	0.19	0.011	0.013

14.2 Repeated SAR Measurement

No.	Band	Mode	Test Position	Gap (cm)	Antenna	Ch.	Freq. (MHz)	Average Power (dBm)	Tune-Up Limit (dBm)	Tune-up Scaling Factor	Power Drift (dB)	Measured 1g SAR (W/kg)	Ratio	Reported 1g SAR (W/kg)
1st	WLAN2.4GHz	802.11b 1Mbps	Bottom Face - Slant of Edge1	0cm	Ant 1	1	2412	15.2	15.5	1.072	0.01	1.100	-	1.179
2nd	WLAN2.4GHz	802.11b 1Mbps	Bottom Face - Slant of Edge1	0cm	Ant 1	1	2412	15.2	15.5	1.072	-0.03	1.010	1.09	1.082
1st	WLAN5GHz	802.11n-HT40 MCS0	Bottom Face - Slant of Edge4	0cm	Ant 2	46	5230	12.4	12.5	1.023	-0.08	1.270	-	1.300
2nd	WLAN5GHz	802.11n-HT40 MCS0	Bottom Face - Slant of Edge4	0cm	Ant 2	46	5230	12.4	12.5	1.023	-0.08	1.190	1.07	1.218
1st	WLAN5GHz	802.11a 6Mbps	Bottom Face - Slant of Edge4	0cm	Ant 2	52	5260	11.5	11.5	1.000	-0.01	1.290	-	1.290
2nd	WLAN5GHz	802.11a 6Mbps	Bottom Face - Slant of Edge4	0cm	Ant 2	52	5260	11.5	11.5	1.000	-0.01	1.270	1.02	1.270
1st	WLAN5GHz	802.11n-HT40 MCS0	Bottom Face - Slant of Edge4	0cm	Ant 2	142	5710	11.5	11.5	1.000	0.07	1.250	-	1.250
2nd	WLAN5GHz	802.11n-HT40 MCS0	Bottom Face - Slant of Edge4	0cm	Ant 2	142	5710	11.5	11.5	1.000	0.03	1.190	1.05	1.190
1st	WLAN5GHz	802.11a 6Mbps	Bottom Face - Slant of Edge4	0cm	Ant 2	149	5745	12.9	13.0	1.023	0.17	1.240	-	1.269
2nd	WLAN5GHz	802.11a 6Mbps	Bottom Face - Slant of Edge4	0cm	Ant 2	149	5745	12.9	13.0	1.023	-0.09	1.210	1.03	1.238

General Note:

1. Per KDB 865664 D01v01r03, for each frequency band, repeated SAR measurement is required only when the measured SAR is ≥0.8W/kg
2. Per KDB 865664 D01v01r03, if the ratio among the repeated measurement is ≤ 1.2 and the measured SAR <1.45W/kg, only one repeated measurement is required.
3. The ratio is the difference in percentage between original and repeated *measured SAR*.
4. All measurement SAR result is scaled-up to account for tune-up tolerance and is compliant.

15. Simultaneous Transmission Analysis

NO.	Simultaneous Transmission Configurations	Supported
1.	WLAN + Bluetooth	No
2.	WLAN Antenna 1 + WLAN Antenna 2	Yes

General Note:

1. WLAN and Bluetooth share the same antenna 1, and cannot transmit simultaneously.
2. This device does not supported SISO mode operation.
3. EUT will choose either WLAN 2.4GHz or WLAN 5GHz according to the network signal condition; therefore, 2.4GHz WLAN and 5GHz WLAN will not operate simultaneously at any moment.
4. The Scaled SAR summation is calculated based on the same configuration and test position.
5. Per KDB 447498 D01v05r02, simultaneous transmission SAR is compliant if,
   i) Scalar SAR summation < 1.6W/kg.
   ii) SPLSR = (SAR1 + SAR2)^1.5 / (min. separation distance, mm), and the peak separation distance is determined from the square root of [(x1-x2)2 + (y1-y2)2 + (z1-z2)2], where (x1, y1, z1) and (x2, y2, z2) are the coordinates of the extrapolated peak SAR locations in the zoom scan.
   iii) If SPLSR ≤ 0.04, simultaneously transmission SAR measurement is not necessary.
   iv) Simultaneously transmission SAR measurement, and the reported multi-band SAR < 1.6W/kg.
   v) The SPLSR calculated results please refer to section 15.2.

15.1 Body Exposure Conditions

Exposure Position	Band	1	2	1+2 Summed SAR (W/kg)	SPLSR	Case No
		WLAN Ant 1	WLAN Ant 2			
		SAR (W/kg)	SAR (W/kg)			
Bottom Face	2.4GHz WLAN	0.979	0.489	**1.47**		
	5.2GHz WLAN	0.262	0.708	**0.97**		
	5.3GHz WLAN	0.409	0.670	**1.08**		
	5.5GHz WLAN	0.355	0.904	**1.26**		
	5.8GHz WLAN	0.861	1.079	**1.94**	0.02	Case 1
Bottom Face - Slant of Edge 1	2.4GHz WLAN	1.189		**1.19**		
	5.2GHz WLAN	0.342		**0.34**		
	5.3GHz WLAN	0.507		**0.51**		
	5.5GHz WLAN	0.625		**0.63**		
	5.8GHz WLAN	1.020		**1.02**		
Bottom Face - Slant of Edge4	2.4GHz WLAN		0.450	**0.45**		
	5.2GHz WLAN		1.300	**1.30**		
	5.3GHz WLAN		1.290	**1.29**		
	5.5GHz WLAN		1.250	**1.25**		
	5.8GHz WLAN		1.277	**1.28**		
Edge 1	2.4GHz WLAN	0.761		**0.76**		
	5.2GHz WLAN	0.371		**0.37**		
	5.3GHz WLAN	0.512		**0.51**		
	5.5GHz WLAN	0.298		**0.30**		
	5.8GHz WLAN	0.349		**0.35**		
Edge 4	2.4GHz WLAN		0.163	**0.16**		
	5.2GHz WLAN		0.911	**0.91**		
	5.3GHz WLAN		1.070	**1.07**		
	5.5GHz WLAN		0.920	**0.92**		
	5.8GHz WLAN		1.141	**1.14**		

15.2 SPLSR Evaluation and Analysis

General Note:

1. SPLSR = $(SAR_1 + SAR_2)^{1.5}$ / (*min. separation distance, mm*). If SPLSR ≤ 0.04, simultaneously transmission SAR measurement is not necessary

Case 1	Band	Position	SAR (W/kg)	Gap (cm)	SAR peak location (m) X	Y	Z	3D distance (mm)	Summed SAR (W/kg)	SPLSR Results	Simultaneous SAR
	5.8GHz WLAN	Bottom Face	0.861	0cm	0.07	-0.056	-0.175	127.1	1.94	0.02	Not required
	5.8GHz WLAN		1.079	0cm	-0.046	-0.108	-0.176				

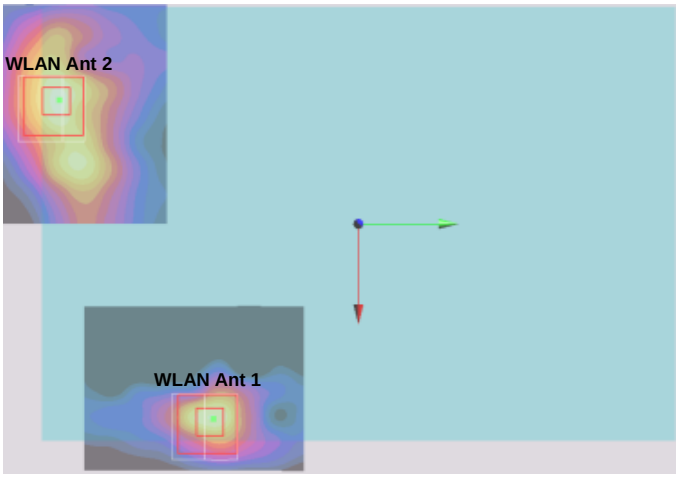

Test Engineer： Aaron Chen, Iran Wang, Jack Wu, San Lin, Frank Wu, and Nick Yu

16. Uncertainty Assessment

The component of uncertainly may generally be categorized according to the methods used to evaluate them. The evaluation of uncertainly by the statistical analysis of a series of observations is termed a Type An evaluation of uncertainty. The evaluation of uncertainty by means other than the statistical analysis of a series of observation is termed a Type B evaluation of uncertainty. Each component of uncertainty, however evaluated, is represented by an estimated standard deviation, termed standard uncertainty, which is determined by the positive square root of the estimated variance.

A Type A evaluation of standard uncertainty may be based on any valid statistical method for treating data. This includes calculating the standard deviation of the mean of a series of independent observations; using the method of least squares to fit a curve to the data in order to estimate the parameter of the curve and their standard deviations; or carrying out an analysis of variance in order to identify and quantify random effects in certain kinds of measurement.

A type B evaluation of standard uncertainty is typically based on scientific judgment using all of the relevant information available. These may include previous measurement data, experience, and knowledge of the behavior and properties of relevant materials and instruments, manufacture's specification, data provided in calibration reports and uncertainties assigned to reference data taken from handbooks. Broadly speaking, the uncertainty is either obtained from an outdoor source or obtained from an assumed distribution, such as the normal distribution, rectangular or triangular distributions indicated in table below.

Uncertainty Distributions	Normal	Rectangular	Triangular	U-Shape
Multi-plying Factor[(a)]	1/k[(b)]	1/√3	1/√6	1/√2

(a) standard uncertainty is determined as the product of the multiplying factor and the estimated range of variations in the measured quantity

(b) κ is the coverage factor

Table 16.1. Standard Uncertainty for Assumed Distribution

The combined standard uncertainty of the measurement result represents the estimated standard deviation of the result. It is obtained by combining the individual standard uncertainties of both Type A and Type B evaluation using the usual "root-sum-squares" (RSS) methods of combining standard deviations by taking the positive square root of the estimated variances.

Expanded uncertainty is a measure of uncertainty that defines an interval about the measurement result within which the measured value is confidently believed to lie. It is obtained by multiplying the combined standard uncertainty by a coverage factor. Typically, the coverage factor ranges from 2 to 3. Using a coverage factor allows the true value of a measured quantity to be specified with a defined probability within the specified uncertainty range. For purpose of this document, a coverage factor two is used, which corresponds to confidence interval of about 95 %. The DASY uncertainty Budget is shown in the following tables.

Error Description	Uncertainty Value (±%)	Probability Distribution	Divisor	Ci (1g)	Ci (10g)	Standard Uncertainty (1g)	Standard Uncertainty (10g)
Measurement System							
Probe Calibration	6.0	Normal	1	1	1	± 6.0 %	± 6.0 %
Axial Isotropy	4.7	Rectangular	√3	0.7	0.7	± 1.9 %	± 1.9 %
Hemispherical Isotropy	9.6	Rectangular	√3	0.7	0.7	± 3.9 %	± 3.9 %
Boundary Effects	1.0	Rectangular	√3	1	1	± 0.6 %	± 0.6 %
Linearity	4.7	Rectangular	√3	1	1	± 2.7 %	± 2.7 %
System Detection Limits	1.0	Rectangular	√3	1	1	± 0.6 %	± 0.6 %
Readout Electronics	0.3	Normal	1	1	1	± 0.3 %	± 0.3 %
Response Time	0.8	Rectangular	√3	1	1	± 0.5 %	± 0.5 %
Integration Time	2.6	Rectangular	√3	1	1	± 1.5 %	± 1.5 %
RF Ambient Noise	3.0	Rectangular	√3	1	1	± 1.7 %	± 1.7 %
RF Ambient Reflections	3.0	Rectangular	√3	1	1	± 1.7 %	± 1.7 %
Probe Positioner	0.4	Rectangular	√3	1	1	± 0.2 %	± 0.2 %
Probe Positioning	2.9	Rectangular	√3	1	1	± 1.7 %	± 1.7 %
Max. SAR Eval.	1.0	Rectangular	√3	1	1	± 0.6 %	± 0.6 %
Test Sample Related							
Device Positioning	2.9	Normal	1	1	1	± 2.9 %	± 2.9 %
Device Holder	3.6	Normal	1	1	1	± 3.6 %	± 3.6 %
Power Drift	5.0	Rectangular	√3	1	1	± 2.9 %	± 2.9 %
Phantom and Setup							
Phantom Uncertainty	4.0	Rectangular	√3	1	1	± 2.3 %	± 2.3 %
Liquid Conductivity (Target)	5.0	Rectangular	√3	0.64	0.43	± 1.8 %	± 1.2 %
Liquid Conductivity (Meas.)	2.5	Normal	1	0.64	0.43	± 1.6 %	± 1.1 %
Liquid Permittivity (Target)	5.0	Rectangular	√3	0.6	0.49	± 1.7 %	± 1.4 %
Liquid Permittivity (Meas.)	2.5	Normal	1	0.6	0.49	± 1.5 %	± 1.2 %
Combined Standard Uncertainty						± 11.0 %	± 10.8 %
Coverage Factor for 95 %						K=2	
Expanded Uncertainty						**± 22.0 %**	**± 21.5 %**

Table 16.2. Uncertainty Budget for frequency range 300 MHz to 3 GHz

Error Description	Uncertainty Value (±%)	Probability Distribution	Divisor	Ci (1g)	Ci (10g)	Standard Uncertainty (1g)	Standard Uncertainty (10g)
Measurement System							
Probe Calibration	6.55	Normal	1	1	1	± 6.55 %	± 6.55 %
Axial Isotropy	4.7	Rectangular	√3	0.7	0.7	± 1.9 %	± 1.9 %
Hemispherical Isotropy	9.6	Rectangular	√3	0.7	0.7	± 3.9 %	± 3.9 %
Boundary Effects	2.0	Rectangular	√3	1	1	± 1.2 %	± 1.2 %
Linearity	4.7	Rectangular	√3	1	1	± 2.7 %	± 2.7 %
System Detection Limits	1.0	Rectangular	√3	1	1	± 0.6 %	± 0.6 %
Readout Electronics	0.3	Normal	1	1	1	± 0.3 %	± 0.3 %
Response Time	0.8	Rectangular	√3	1	1	± 0.5 %	± 0.5 %
Integration Time	2.6	Rectangular	√3	1	1	± 1.5 %	± 1.5 %
RF Ambient Noise	3.0	Rectangular	√3	1	1	± 1.7 %	± 1.7 %
RF Ambient Reflections	3.0	Rectangular	√3	1	1	± 1.7 %	± 1.7 %
Probe Positioner	0.8	Rectangular	√3	1	1	± 0.5 %	± 0.5 %
Probe Positioning	9.9	Rectangular	√3	1	1	± 5.7 %	± 5.7 %
Max. SAR Eval.	4.0	Rectangular	√3	1	1	± 2.3 %	± 2.3 %
Test Sample Related							
Device Positioning	2.9	Normal	1	1	1	± 2.9 %	± 2.9 %
Device Holder	3.6	Normal	1	1	1	± 3.6 %	± 3.6 %
Power Drift	5.0	Rectangular	√3	1	1	± 2.9 %	± 2.9 %
Phantom and Setup							
Phantom Uncertainty	4.0	Rectangular	√3	1	1	± 2.3 %	± 2.3 %
Liquid Conductivity (Target)	5.0	Rectangular	√3	0.64	0.43	± 1.8 %	± 1.2 %
Liquid Conductivity (Meas.)	2.5	Normal	1	0.64	0.43	± 1.6 %	± 1.1 %
Liquid Permittivity (Target)	5.0	Rectangular	√3	0.6	0.49	± 1.7 %	± 1.4 %
Liquid Permittivity (Meas.)	2.5	Normal	1	0.6	0.49	± 1.5 %	± 1.2 %
Combined Standard Uncertainty						± 12.8 %	± 12.6 %
Coverage Factor for 95 %						K=2	
Expanded Uncertainty						**± 25.6 %**	**± 25.2 %**

Table 16.3. Uncertainty Budget for frequency range 3 GHz to 6 GHz

17. References

[1] FCC 47 CFR Part 2 “Frequency Allocations and Radio Treaty Matters; General Rules and Regulations”

[2] ANSI/IEEE Std. C95.1-1992, “IEEE Standard for Safety Levels with Respect to Human Exposure to Radio Frequency Electromagnetic Fields, 3 kHz to 300 GHz”, September 1992

[3] IEEE Std. 1528-2003, “Recommended Practice for Determining the Peak Spatial-Average Specific Absorption Rate (SAR) in the Human Head from Wireless Communications Devices: Measurement Techniques”, December 2003

[4] SPEAG DASY System Handbook

[5] FCC KDB 248227 D01 v01r02, “SAR Measurement Procedures for 802.11 a/b/g Transmitters”, May 2007

[6] FCC KDB 447498 D01 v05r02, “Mobile and Portable Device RF Exposure Procedures and Equipment Authorization Policies”, Feb 2014

[7] FCC KDB 616217 D04 v01r01, “SAR Evaluation Considerations for Laptop, Notebook, Netbook and Tablet Computers”, May 2013

[8] FCC KDB 644545 D01 v01r02, "Guidance for IEEE 802.11ac and Pre-ac Device Emission Testing", Oct 2013.

[9] FCC KDB 865664 D01 v01r03, "SAR Measurement Requirements for 100 MHz to 6 GHz", Feb 2014.

[10] FCC KDB 865664 D02 v01r01, “RF Exposure Compliance Reporting and Documentation Considerations” May 2013.