Remote Node Installation Guide

18-0027-001, Rev 1.5

May 22, 2025

Table of Contents

Supported Hardware 4
More Information 5
Safety and Warnings 6
- Exposure Safety 7
- General Health and Safety Information 9
- Health and Safety Warning 10
- Warning Labels 11
- General Hazards 12

Remote Node Installation Preparation 13
- Required Tools 13
- Choose Ethernet Cable 13
- Choose Transient Voltage Suppression (TVS) Devices 14
- Choose Grounding Wire 14
- Equipment Supplied by Tarana 15

Mount Remote Node 16
- Attach Mounting Bracket to a Wall 16
- Attach Mounting Bracket to a Pole 16

Connect Remote Node 17
- Grounding Considerations 17
- Ground and Power the Remote Node 17
- Aim the Remote Node 20
- Log In to the Remote Node 20
- Verify Connectivity 21
- Radio State 21
- Alignment Metric 21
- Additional Position Adjustments 24

Configure Basic Parameters 26
- Hostname and Data VLAN 26
- Configure Geographic and Orientation Parameters 28
- Adjust the Tilt 28
- Confirm Operation in Tarana Cloud Suite (TCS) 29

Beamwidth Reference 31
Regulatory and Compliance Information 33
- U-NII Band Support 33
- Regulatory Standard 33
- FCC Statement (US Deployment) 35
- Industry Canada Statement (Canada Deployment) - EN 36
- Industry Canada Statement (Canada Deployment) - FR 37
- EU and UK Statement 38
- Resolution 680: Brazil 39
- Remote Node Homologation Country List 40

Tarana Wireless, Inc. © 2025 All rights reserved

CBRS Required Information 43
Warranty 45

Tarana Wireless, Inc. © 2025 All rights reserved

Supported Hardware

This guide covers the following remote node models:

Model Name	Model Number	Description
RN-M	GXRN8356900	Multiband Remote Node
RNv-6	G1RN6AHI042	G1 Value-engineered 6 GHz Remote Node
RN-6	G1RN6AHB012	G1 6 GHz Remote Node
RN-5	G1-RN5ASI002 G1RN5ASI012 G1RN5AHB012	G1 5 GHz Remote Node
RN-3	G1-RN3ASI001 G1RN3AHB012	G1 3 GHz CBRS Remote Node

Tarana Wireless, Inc. © 2025 All rights reserved

More Information

You can download the latest remote node installation guide at the following URL:

www.taranawireless.com/rn_manual

You can find additional information and videos on the Tarana Support page.

Safety and Warnings

Tarana equipment requires adherence to all relevant regulatory, safety, and telecom industry best practice guidelines for outdoor radios.

General Warnings

Failure to observe these safety precautions may result in personal injury or damage to equipment.

- Follow all warnings and instructions marked on this product.
- Use standard safety guidelines when mounting. Installation and maintenance procedures must be followed and performed by trained personnel only.
- Before unmounting the product, disconnect power input to reduce the risk of hazards.
- Only use Tarana-approved Power over Ethernet (PoE) injectors.

NOTE

In accordance with the Tarana Product Update Bulletin dated June 21, 2023, Tarana-approved PoE injectors include the following:

- 44-0016-001 Comlii GO566-500-120 PoE injectors with cord end C5
- 44-0027-001 Phihong POE60U-1BTE PoE injector with cord end C13 or C14
- 44-0037-001 Phihong POE60U-BTA PoE injector with cord end C13 or C14. This PoE injector is exclusively for the RNv-6 (G1RN6AHI042) and RN-M (GXRN8356900) remote nodes.

You might need to source the power cord locally.

- Do not open the device. Opening the device voids the warranty.
- Do not stack anything on the radome.
- Cable ends must be protected from weather if not connected to the device.

Tarana Wireless, Inc. © 2025 All rights reserved

Exposure Safety

The general population uncontrolled limit for maximum permissible exposure (MPE) is 1 mW/cm2. To meet this MPE requirement, the operator must be at a minimum distance away from the radome cover of the system. Refer to the following table for additional information:

Model	Description	Regulatory Domain	Regulatory Standard	Minimum Separation Distance[a.] (cm)	Professional Installation Required
RN-M (GXRN8356900)	3 GHz, 6 GHz Multiband Remote Node	FCC	FCC 46 CFR Part 1.1310	66	Yes
		ISED	RSS-102	50	No
RNv System (6 GHz) (G1RN6AHI042)	6 GHz Value-engineered Remote Node	FCC (USA)	FCC 46 CFR Part 1.1310	58	No
		ISED (Canada)	RSS-102	62	No
		CE (European Union)	EN 50665-2017	20	No
RN-3 (G1RN3AHB012)	3.6 GHz Remote Node	FCC (USA)	FCC 47 CFR Part 1.1310	80	Yes
RN-3 (G1-RN3ASI001)	3.6 GHz Remote Node	FCC (USA)	FCC 47 CFR Part 1.1310	63	Yes
RN-5 (G1RN5AHB012)	5 GHz Remote Node	FCC (USA)	FCC 47 CFR Part 1.1310	63	No
		ISED (Canada)	RSS-102	63	No
		CE (European Union)	EN 50385: 2017	20	No
RN-5 (G1RN5ASI012)	5 GHz Remote Node	FCC (USA)	FCC 47 CFR Part 1.1310	95	Yes
		ISED (Canada)	RSS-102	95	Yes
		CE (European Union)	EN 50385: 2017	20	Yes
RN-5 (G1RN5ASI002)	5 GHz Remote Node	FCC (USA)	FCC 47 CFR Part 1.1310	46	Yes
		ISED (Canada)	RSS-102	46	Yes
		CE (European Union)	EN 50385: 2017	42	Yes

Tarana Wireless, Inc. © 2025 All rights reserved

Model	Description	Regulatory Domain	Regulatory Standard	Minimum Separation Distance[a.] (cm)	Professional Installation Required
RN-6 (G1RN6AHB012)	6 GHz Remote Node	FCC (USA)	FCC 47 CFR Part 1.1310	44	No
		ISED (Canada)	RSS-102	44	No
		CE (European Union)	EN 50665-2017	20	No

[a.]Minimum separation distance is calculated using the maximum output power and measured along the axis of the main lobe where power density is greatest.

Reference: 47 CFR §1.1310 and 47 CFR §2.1091

NOTE

Some models do not require professional installation, however, Tarana Wireless recommends professional installation by a trained Tarana partner or other qualified installer. This does not preclude end-user installation.

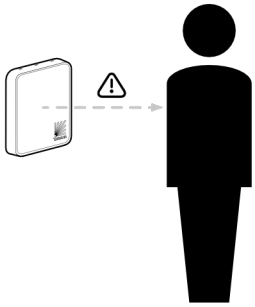

Do not install the remote node in any location where people will be closer than the minimum separation distance.

General Health and Safety Information

The following table summarizes general health and safety topics.

Topic	Explanation
Flammability	The equipment is designed and constructed to minimize the risk of smoke and fumes during a fire.
Hazardous Materials	No hazardous materials are used in the construction of this equipment.
Hazardous Voltage	This system meets global product safety requirements for safety extra-low voltage (SELV) rated equipment.
Safety Signs	External warning signs or other indicators on the equipment are not required.
Surface Temperatures	The external equipment surfaces become warm during operation, due to heat dissipation. However, the temperatures reached are not considered hazardous.

Tarana Wireless, Inc. © 2025 All rights reserved

Health and Safety Warning

All personnel must comply with the relevant health and safety practices when working on or around Tarana radio equipment.

This system has been designed to meet relevant US and European health and safety standards.

You must adhere to local safety regulations.

Tarana Wireless, Inc. © 2025 All rights reserved

Warning Labels

WARRANTY VOID DO NOT BREAK THE TAMPER SEALS ON HARDWARE. DOING SO WILL VOID THE WARRANTY.
WARNING Making adjustments and/or modifications to this equipment that are not in accordance with the provisions of this User Guide, the Installation Guide or other supplementary documentation may result in personal injury or damage to the equipment, and may void the equipment warranty.
AVERTISSEMENT Tout réglage ou modification faits à cet équipement hors du cadre édicté par ce guide d'utilisation ou par toute autre documentation supplémentaire pourraient causer des blessures ou endommager l'équipement et peut entraîner l'annulation de sa garantie.
WARNUNG Die an diesen Geräten gemachte Einstellungen und/oder Änderungen, welche nicht gemäß dieser Bedienungsanleitung, oder gemäß anderen zusätzlichen Anleitungen, ausgeführt werden, können Verletzungen oder Materialschäden zur Folge haben und eventuell die Garantie ungültig machen.
ATENCIÓN Llevar a cabo ajustamientos y/o modificaciones a este equipo, sin seguir las instrucciones provistas por este manual u otro documento adicional, podría resultar en lesiones a su persona o daños al equipo, y anular la garantía de este último.
警告 對本设备进行不符合本用户指南，安装手册，或其他补充文件规定的调整和/或 修改可能會导致人身伤害或设备损坏, 并可能导致失去设备的保修。

Tarana Wireless, Inc. © 2025 All rights reserved

General Hazards

Refer to the following table for general hazards.

Topic	Explanation
Protection from RF Exposure	When installing, servicing or inspecting an antenna always comply with the following: • Locate the antenna such that it does not infringe the RF Exposure Limit Distance, relating to the Compliance Boundary General Public. (See Exposure Safety table) • Stay aware of the potential risk of RF exposure and take appropriate precautions. • Do not stand in front of or look into an antenna without first ensuring the associated transmitter or transmitters are switched off. • At a multi-antenna site ask the site owner or operator for details of other radio services active at the site and for their requirements/recommendations for protection against potentially harmful exposure to RF radiation. • When it is not possible to switch transmitters off at a multi-antenna site and there is potential for exposure to harmful levels of RF radiation, wear a protective suit.
Grounding Connections	Reliable grounding of the remote node chassis must be maintained.
Power Supply	The remote node must be powered by a Tarana-provided Power over Ethernet (PoE) injector. The indoor ambient operating temperature of the PoE injector is -10°C to +40°C.
Maximum Ambient Temperature	The outdoor ambient temperature range for the remote node is -40°C to 55°C. To ensure correct operation and to maximize long term component reliability, ambient temperatures must not be exceeded. Operational specification compliance is not guaranteed for higher ambients. The remote node must be mounted in such a way as to permit the vertical free flow of air through its cooling fins.
Rack Mount Temperature Considerations	The remote node is designed to operate in an outdoor environment with no significant obstructions in front of the radome. Do not install the remote node in a closed or multi-unit rack assembly, because such a closed rack would impede the propagation of the RF signals. The maximum ambient temperature applies to the immediate operating environment of the remote node.

INDOOR AND OUTDOOR MAX OPERATING TEMPERATURES

Because indoor and outdoor environments are different, the indoor maximum operating temperature of PoE injectors are different from the outdoor maximum operating temperature of the remote node. This does not present a hazard or safety concern.

Tarana Wireless, Inc. © 2025 All rights reserved

Remote Node Installation Preparation

Ensure that you have everything you need to install the remote node.

Required Tools

To install a remote node properly, you must have the following tools available during installation.

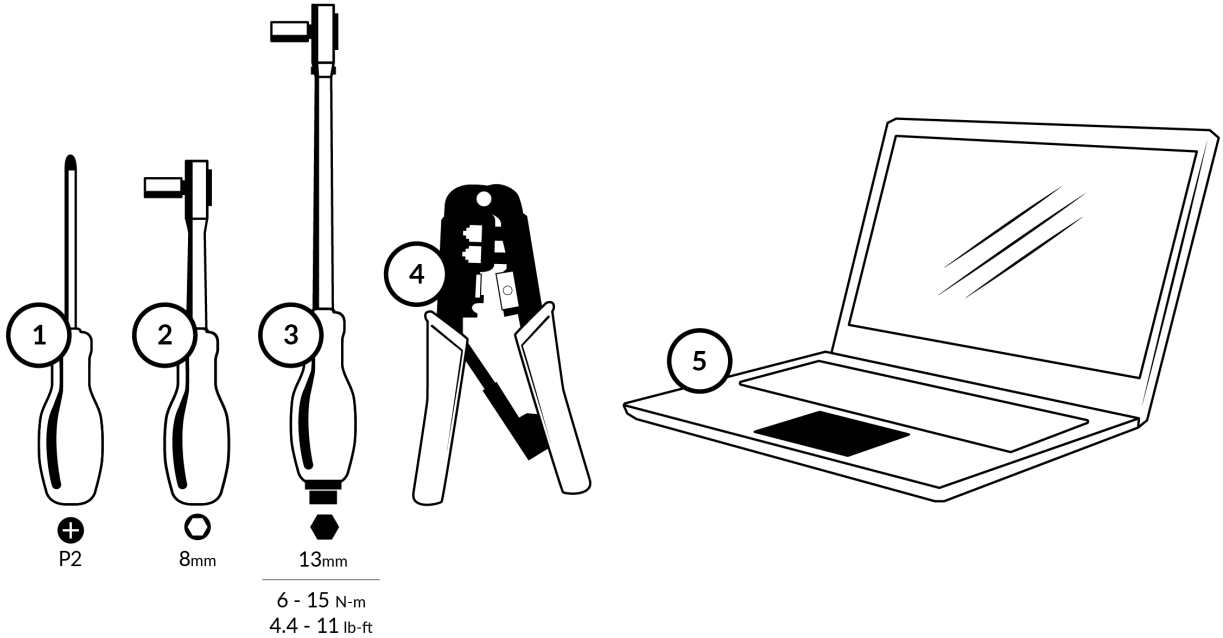

Reference	Quantity	Description
1	1	Screwdriver, Phillips head, #2
2	1	Socket wrench, hex, 8 mm
3	1	Torque wrench, 6 - 15 Nm or 4.4 - 11 lb-ft
4	1	Crimping tool
5	1	Laptop, admin rights or sufficient rights to manage network settings

Choose Ethernet Cable

Use shielded Ethernet cable only.

On short runs, you can use either Cat5e or Cat6 cable. On long runs, use only Cat6 cable because the reactance of the cable can affect the maximum data rate that the cable can accommodate.

Tarana Wireless, Inc. © 2025 All rights reserved

To ensure proper bonding, you must use shielded RJ-45 connectors, outdoor rated, on the shielded cables so that there is continuity between both connectors at the cable ends. Proper bonding ensures a path to ground from every point along the run.

Choose Transient Voltage Suppression (TVS) Devices

TVS devices use a few distinct technologies to shunt transient current to ground, usually metal oxide varistors (MOVs), avalanche diodes, or gas discharge tubes (GDTs). Choose TVS devices that have the following characteristics:

- Rated for at least 8000 V
- Shielded from ingress to egress port
- Have a grounding wire or tab that you can bond to the main grounding cable
- Can protect all conductors of a multi-conductor cable such as an Ethernet cable

Service providers commonly use the following surge protector devices to protect Tarana remote nodes:

Description	Part Number and Link	Distributor
Apex9 Ethernet Surge Protector, 48V IP 65	APX-SP-RJ45E-48V	CTI
Cambium Gigabit Surge Suppressor (56V)	C000000L033A	Winncomm
Citel CGMJ8-POE-A-C5E	892004	Citel
Microsemi Gigabit PoW Surge Protector	PD-OUT/SP11	Microchip
Mikrotik Passive Gigabit PoE w/Surge Protection	GESP+POE-IN	Winncomm
Mimosa Gigabit Network Interface Device	100-00039	WAV
Perfect Vision Surge Protector, Cat 5 / 6	XCATSURGE	CTI
Radwin Outdoor Lightning Protection Unit	RW-9924-0108	Winncomm
Transector Data Surge Protector	ALPU-F140	Winncomm
Ubiquiti Ethernet Surge Protector	ETH-SP-G2	Winncomm

Choose Grounding Wire

The grounding wire must extend from the remote node grounding point to the ground electrode of the building. For residential buildings, the ground electrode is usually a ground rod or water pipes; for commercial and industrial buildings, the ground electrode can be water pipes, ground rod, ground ring, or dedicated ground bus inside the building near the ingress point.

To function as designed with Tarana equipment, the ground system from remote node to ground electrode must be less than 0.3 Ω. To ensure this low resistance, short-run ground wires must be 12 AWG solid core or larger; long-run ground wires must be 10 AWG solid core or larger.

Tarana Wireless, Inc. © 2025 All rights reserved

Equipment Supplied by Tarana

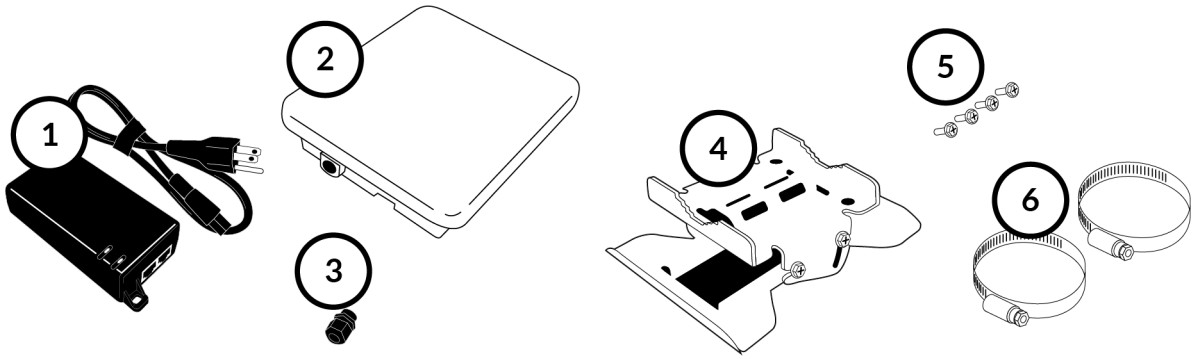

The following equipment arrives in the remote node box:

Reference	Quantity	Description
1	1	PoE injector 40-60 VDC, 1.5A, with power cord
2	1	Tarana remote node radio unit
3	1	Ethernet cable cord grip

The following equipment arrives in a separate mounting kit box:

Reference	Quantity	Description
4	1	Remote node mounting bracket, assembled
5	4	M5 flanged-head screws with thread lock
6	2	Worm gear clamps

Tarana Wireless, Inc. © 2025 All rights reserved

Mount Remote Node

Remote nodes come with mounting brackets designed so that you can mount them to a wall or to a pole.

Attach Mounting Bracket to a Wall

To attach the mounting bracket to the wall, to the following:

1. Identify the fasteners that are appropriate to the wall material and have a 23 kg (50 lbs) load rating.
2. Place the smaller side of the bracket against the wall and apply fasteners at the corners of the bracket. Do not modify or enlarge the screw holes. Modifying the screw holes damages or removes the protective finish of the bracket.

Attach Mounting Bracket to a Pole

The minimum pole diameter is 38.10 mm (1.50 in) and the maximum pole diameter is 63.50 mm (2.50 in).

1. Open the worm gear clamps and route them through the bracket.
2. Hold the bracket against the pole so that the serrated edges of the bracket are in contact with the pole.
3. Torque the clamps to 4.5 – 5.1 N-m (3.3 – 3.7 lbF-ft). Do not exceed torque range.

Tarana Wireless, Inc. © 2025 All rights reserved

Connect Remote Node

Plan the connections carefully. Remote node installations are limited by factors such as physical location of the remote node, ground electrode location, and length of the Ethernet cable run.

Grounding Considerations

This section describes the grounding and bonding process and provides details about the protection level and equipment safety implications of each. This document uses the US National Electric Code, which is part of the National Fire Protection Association (NFPA) publication 70, Articles 250 and 810. To protect your installation best, be sure to follow the guidance in this document closely along with NFPA 70 and your local electrical codes, adhering to the most stringent recommendations.

WARNING

Transient voltage (lightning) damage is not covered under warranty. The recommendations in this guide, when followed correctly, provide the best protection from transient voltage damage. However 100% protection is neither implied nor possible.

All installations are susceptible to transient voltage damage, but residential installations are more susceptible than commercial, industrial, or tower installations. Because of this, there is a higher risk of financial impact due to damaged equipment and replacement efforts.

Tarana distinguishes grounding procedures based on how long the main external Ethernet cable run is from the remote node to the building ingress point. In this document, external Ethernet runs that are less than 100 feet (30 m) are called short runs. External Ethernet runs that are longer than 100 feet (30 m) are called long runs. Because the resistance and inductance of a wire increase with distance, additional considerations and restrictions are required for long runs.

In addition, consider that there are two parallel paths to ground: The ground cable and the Ethernet cable. Because the Ethernet cable is a path to ground during transient voltage events, you must use shielded cable throughout the installation to divert transient current away from the vulnerable signal wires to the more robust shielding.

Ground and Power the Remote Node

In lightning-prone areas, install the remote node below the roofline to avoid the increased risk of lightning strikes due to mounting on a mast or pole above the roofline.

Tarana Wireless, Inc. © 2025 All rights reserved

1. Attach a ring terminal to the end of the ground wire, and then connect it to the ground point on the remote node. Ensure that the grounding system abides by the guidance provided by this document and by local legal and regulatory requirements.

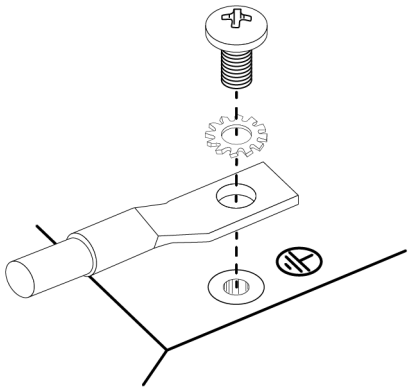

2. Ensure that the grounding wire does not limit antenna adjustment, and then torque the screw to 6 N-m (4.5 lb-ft).
3. Remove the nut from the cord grip body and then push out the grommet.
4. Thread the Ethernet cable through the nut, and then thread the cable through the cord grip body.
5. Insert the cable into the remote node Ethernet port, and then screw the cord grip body into the remote node.
6. Torque the body of the cord grip to 4.5 – 5.1 N-m (3.3 – 3.8 lb-ft).
7. Insert the grommet into the cord grip body chamfered end first. Then screw the sealing nut onto the body and torque the sealing nut to 5.6 – 6.2 N-m (4.1 – 4.6 lb-ft).
8. Terminate and test the Ethernet cable using a PoE testing device to ensure complete and proper function.
9. Connect the powered Ethernet cable to the remote node and allow the remote node to boot.

Tarana Wireless, Inc. © 2025 All rights reserved

CAUTION

You must connect the PoE injector to a Gigabit Ethernet device, such as a laptop, router, switch, or access point. Remote nodes are Gigabit devices and do not negotiate to a lower data rate. The following PoE injectors are compatible with the respective remote node models:

Remote Node Model and Part Number	PoE Injector Part Number	Mounting Kit Part Number
G1-RN5ASI002 (30-0128-001)	44-0017-001	34-0027-001
G1RN5ASI012 (30-0150-001)	44-0017-001	34-0027-001
G1RN5AHB012 (30-0160-001)	44-0017-001, 44-0027-001	34-0027-001

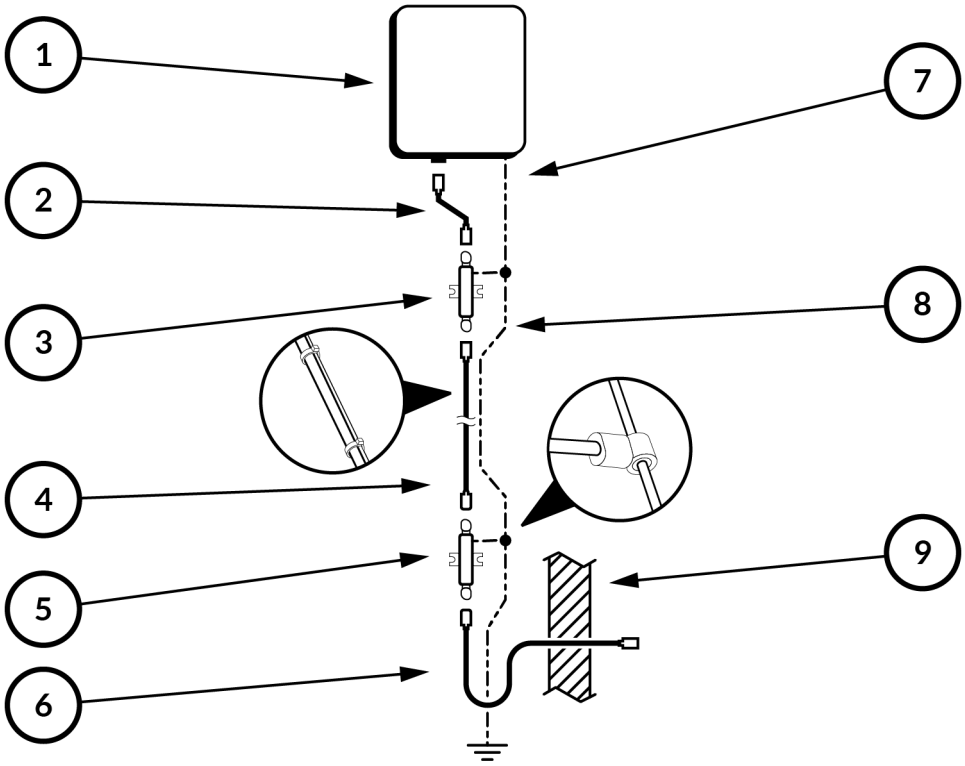

1	Remote node, externally mounted
2	Outdoor rated shielded CAT6 cable with shielded connectors, about 1 m
3	Remote-node-side outdoor-rated Ethernet cable surge protector, shielded and bonded to ground
4	Main run of outdoor rated shielded cable with shielded connectors. Cat6 cable is required for runs longer than 30 m (100 ft) to ensure sufficient bandwidth for high data rates.
5	Ingress point outdoor-rated Ethernet cable surge protector, shielded and bonded to ground.
6	Ingress point outdoor-rated shielded CAT6 cable with shielded connectors. Drip loop is included in the diagram.

Tarana Wireless, Inc. © 2025 All rights reserved

7	Remote node ground lug connection. Actual location of the ground lug connection varies depending on the remote node model.
8	Main ground wire, no smaller than 10 AWG, solid, connected to water pipes or ground rod
9	Exterior wall with Ethernet ingress

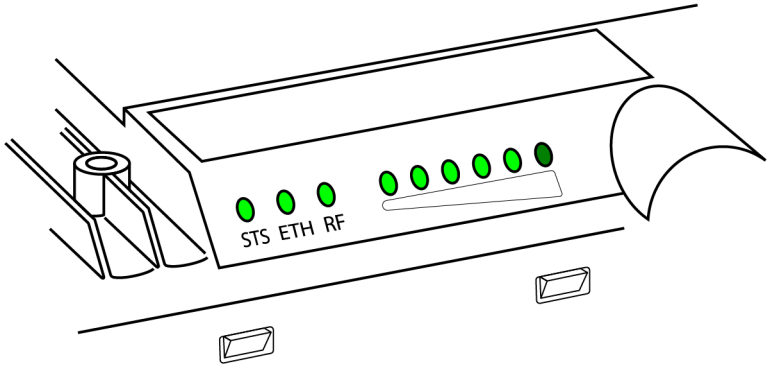

When the remote node boot process completes, the LEDs exhibit the following behavior:

LED Indicator	LED Behavior	Description
ETH	Green Blink	The Ethernet port is actively transmitting or receiving data.
RF	Green	The remote node has a stable RF link to the base node.
STATUS or STS	Green	The remote node boot process is complete.

Aim the Remote Node

For the best connection, you must aim the remote node toward the base node. If you are unsure of the direction to the base node, you can use a satellite view of the deployment area to orient yourself and aim the remote node.

NOTE
At this stage, aligning the remote node to the location of base node is preliminary. You only need sufficient alignment to get a stable signal. Final alignment occurs later.

Log In to the Remote Node

To verify installation, log in to the remote node. This is done via the remote node web management interface.

1. To log into the management interface, connect a laptop with a 1000 Mbps Ethernet port to the Ethernet port of the PoE powering the remote node.
2. Assign a static IP address of 192.168.10.10 to the laptop's Ethernet port.

3. Enter the following into the Chrome browser address bar:
   https://192.168.10.2

> **NOTE**
> Chrome is the supported browser.

4. Enter the following username and password when prompted
   - **Username**: admin
   - **Password**: admin123

Verify Connectivity

Navigate to Setup, and then verify that Radio State is Connected.

Edit the Operator ID to match the base node Operator ID. If needed, you can verify this number with the network administrator.

> **NOTE**
> A remote node only connects to base nodes with the same Operator ID.

When you select Search for BNs the remote node disconnects, which interrupts service, and restarts the search for a new base node.

Radio State

Verify the Radio State is up. This parameter indicates whether the radio is searching, initializing, calibrating or connected.

Before a remote node connects to a base node, it searches for a viable base node signal. The list of detected base node signals will be represented by the Search Metric as the remote node scans through the supported frequencies. After the remote node completes the scanning process, it will enter the Initialization stage with the base node that has the highest Search Metric. The remote node calibrates before the connection to the base node is established. Select **Search for BNs** to repeat the process.

Alignment Metric

When you align the remote node, the remote node constantly accounts for multiple factors, and then derives a single value called the alignment metric. You can use the alignment metric to judge the best position to obtain the best remote-node-to-base-node

Tarana Wireless, Inc. © 2025 All rights reserved

alignment. To obtain the best alignment, no beamforming occurs during the alignment process.

Aligning the remote node is an important part of establishing a stable link. You can pivot the remote node horizontally, sweeping through the azimuth on the mount. The 3 dB horizontal beamwidth of a remote node varies by model from 58 to 68˚, so small changes in the azimuth have little effect.

You can also adjust the tilt of the remote node. Be sure to tilt the remote node up or down to align physically with the base node. The 3 dB vertical beamwidth of a remote is much smaller than is horizontal beamwidth, from 12.1 to 17.6˚, so small changes in the tilt can have much greater effect on the alignment metric.

REMOTE NODE TILT LIMITS

The FCC limits the upward tilt of remote nodes to 12° to prevent satellite interference. If operating in the FCC regulatory domain, be sure to limit the tilt of the remote node to between 12° up and 5° down.

After the remote node is aligned and the network begins to pass traffic, the remote node and base node each form directed beams of energy—a process called beamforming—that enhance the data throughput by enhancing the channel and rejecting interference sources. Beamforming only occurs horizontally, so adjusting the remote node tilt to align it with the base node is very important.

Align the RN-3 and RN-5 Remote Nodes

When the remote node connects to a base node, the alignment metric appears. The alignment metric displays a dial with a range from 0 to 30. A value below 10 is unsuitable for a stable link; a value of 10 or more is recommended to establish a usable link. When you move the remote node to align it, the dial responds in real time. Adjust the alignment of the remote to until you find a position that results in the maximum value.

NOTE

If the remote node is calibrating at this stage, do not adjust the remote node azimuth or tilt until calibration completes.

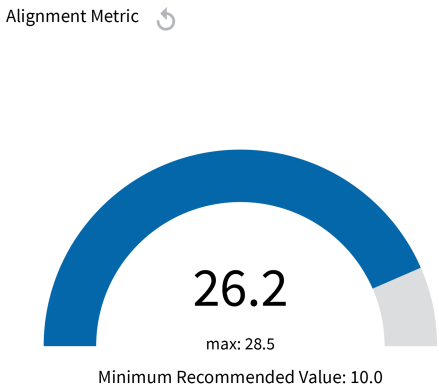

Align the RN-6 and RNv-6 Remote Nodes

On the RN-6 and RNv-6 remote nodes the software alignment metric is available, but a more convenient option is to use the alignment LEDs on the bottom of the remote node near the Ethernet connection.

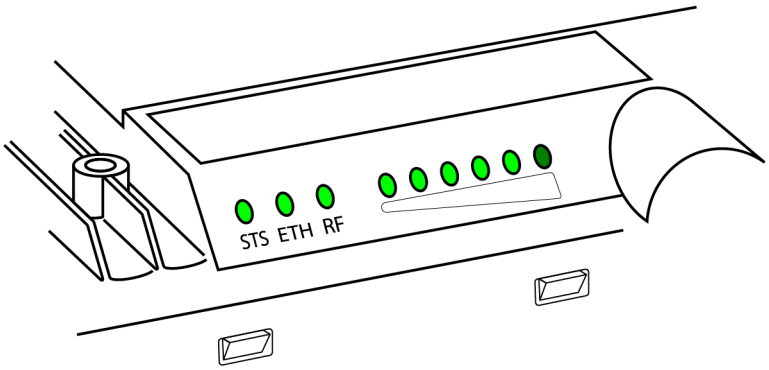

Alignment LEDs on the RN-6 remote node

As you move the remote node through the azimuth and tilt adjustments, the alignment LEDs begin to flash and illuminate in sequence based on the calculated alignment metric. The first indication of a signal is when the alignment metric is 4 and the first LED begins to flash amber. As the alignment metric increases, a different LED flashes. When the alignment metric reaches 10, the first LED illuminates steady amber, and this is the minimum recommended alignment metric value.

NOTE
The horizontal beamwidth of the RNv-6 is about 15 degrees, as compared to the beamwidth of the RN-6, which is about 66 degrees. This means that you must pay much closer attention to the horizontal alignment when installing the RNv-6. Because of the narrower beamwidth, the alignment metric indicators on the RNv-6 are more sensitive to azimuth changes.

Tarana Wireless, Inc. © 2025 All rights reserved

The following table displays how the alignment LEDs respond to the alignment metric values.

Alignment Metric	LED 1	LED 2	LED 3	LED 4	LED 5	LED 6
< 4	Off	Off	Off	Off	Off	Off
4	Amber Blink	Off	Off	Off	Off	Off
5	Off	Amber Blink	Off	Off	Off	Off
6	Off	Off	Amber Blink	Off	Off	Off
7	Off	Off	Off	Amber Blink	Off	Off
8	Off	Off	Off	Off	Amber Blink	Off
9	Off	Off	Off	Off	Off	Amber Blink
10	Amber	Off	Off	Off	Off	Off
11	Green	Off	Off	Off	Off	Off
12	Green	Amber	Off	Off	Off	Off
13	Green	Green	Off	Off	Off	Off
14	Green	Green	Amber	Off	Off	Off
16	Green	Green	Green	Off	Off	Off
18	Green	Green	Green	Amber	Off	Off
20	Green	Green	Green	Green	Off	Off
22	Green	Green	Green	Green	Amber	Off
24	Green	Green	Green	Green	Green	Off
26	Green	Green	Green	Green	Green	Amber
28 - 30	Green	Green	Green	Green	Green	Green

Additional Position Adjustments

Sometimes it might be difficult to obtain a good quality connection as measured by the alignment metric. In such cases, there are other adjustments you can try.

You can not only receive line-of-sight (LOS) signals, you can also take advantage of RF behavior to create stable, effective links in near-line-of-sight (nLOS) or even non-line-of-sight (NLOS) conditions. Each of these is defined here:

Line of Sight (LoS): RF LoS is when the direct path between two radios is free of obstruction both visually and within the innermost portion of the Fresnel zone.

Near Line of Sight (nLoS): RF nLoS is when the direct path between two radios is partially obstructed within the innermost portion of the Fresnel zone.

Tarana Wireless, Inc. © 2025 All rights reserved

Non-Line of Sight (NLoS): RF NLoS is when the direct path between two radios is completely obstructed within the innermost portion of the Fresnel zone.

If you are not obtaining a signal with the strength you expect, be sure to try the following before committing to a final permanent installation location and orientation.

Adjust Installation Height: The alignment angle between a remote node and a base node can be very small, especially when the link distance is quite long. In those cases, making small adjustments to tilt or azimuth might have little or no positive impact. However, raising the remote node higher on the wall, pole, or mast might make a significant difference. Objects that obstruct or partially obstruct the link path deteriorate the link, so raising the remote node can lift the link path out of the obstructions.

Adjust the Physical Location: In the same way that raising the height of the remote node installation can result in a stronger signal, moving the physical location of the remote node to another part of a rooftop or to another pole or mast can have the same effect. The only thing that limits the physical location of the remote node is the length of the Ethernet cable run, which cannot exceed 328 feet (100 m).

Adjust for Diffracted Signals: The main directive for establishing a link is to align the remote node and the base node, and to make sure that the path is clear. Raising the remote node is sometimes insufficient or impossible. In this case, increasing the tilt further might help, as long as you don't exceed the 12-degree tilt limit imposed by the FCC. RF signals diffract around obstacles, and you can use the remote node tilt angle to take advantage of diffraction and increase your alignment metric. Likewise, you can sometimes adjust the azimuth to capture a diffracted signal that is stronger than the obstructed direct signal.

Adjust for Reflected Signals: In situations where the signal you obtain from a direct alignment isn't strong enough, you can adjust the azimuth of the remote node to point in a completely different direction to take advantage of reflected signals from the base node. This approach can be helpful in urban environments where signals reflect off buildings, or in terrain environments in which geological features might reflect signals.

Tarana Wireless, Inc. © 2025 All rights reserved

Configure Basic Parameters

Hostname and Data VLAN

The base node Serial field displays the serial number of the base node to which the remote node is connected.

The Hostname field displays the remote node hostname. By default, the serial number is used.

Optionally, you can set a Data VLAN on the remote node. The setting does not establish or configure a VLAN between the remote node and the base node; the remote node does not tag or untag frames. Rather, the Data VLAN setting on the remote node overrides the VLAN setting on the base node. In this case, arriving frames sent from the network router to the base node data port must be tagged with the VLAN number of the remote node setting.

NOTE
You can configure hostname and data VLAN in TCS.

Tarana Wireless, Inc. © 2025 All rights reserved

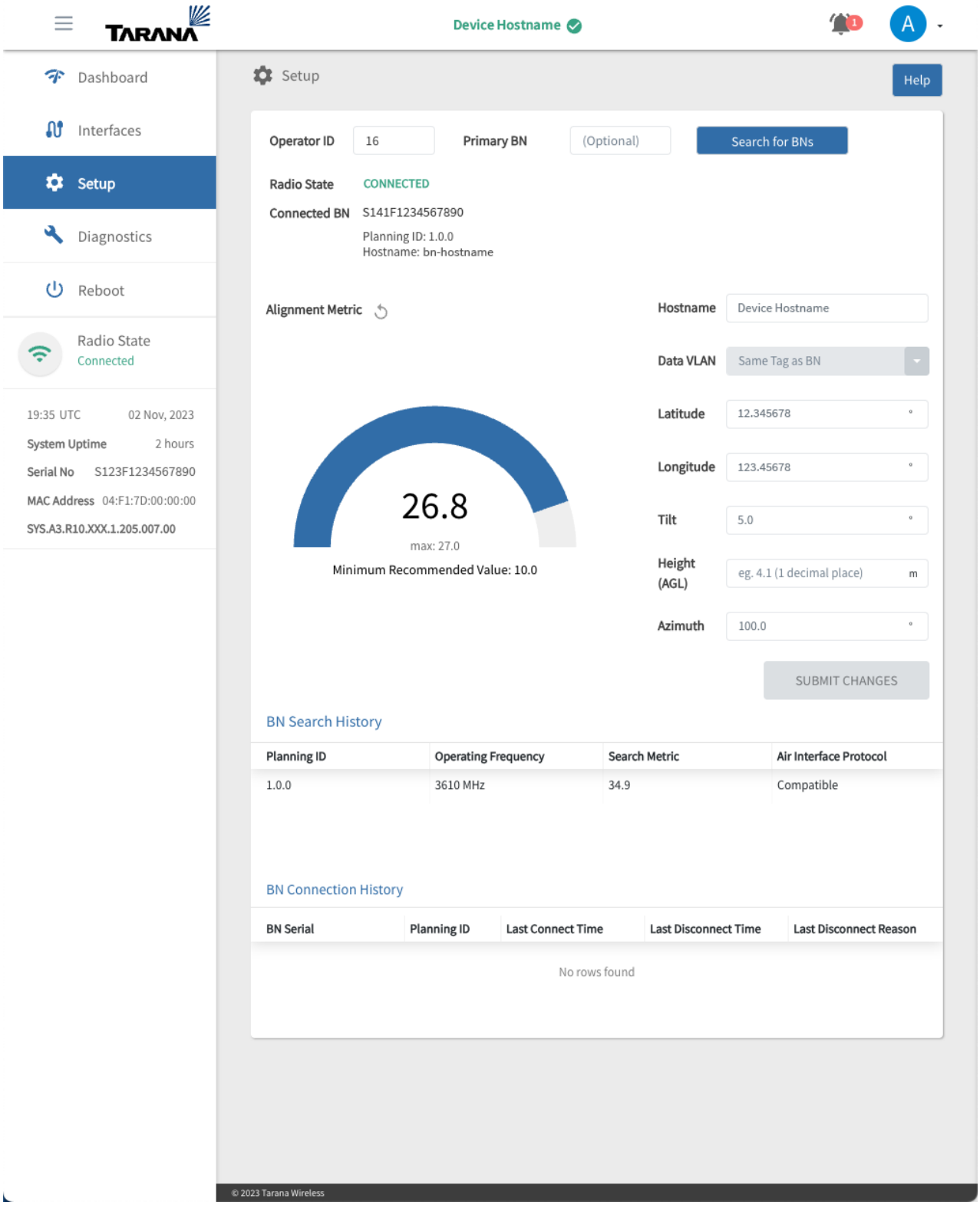
TARANA
Device Hostname
Dashboard
Interfaces
Setup
Diagnostics
Reboot
Radio State
Connected
19:35 UTC 02 Nov, 2023
System Uptime 2 hours
Serial No S123F1234567890
MAC Address 04:F1:7D:00:00:00
SYS.A3.R10.XXX.1.205.007.00
Setup
Help
Operator ID 16
Primary BN (Optional)
Search for BNs
Radio State CONNECTED
Connected BN S141F1234567890
Planning ID: 1.0.0
Hostname: bn-hostname
Alignment Metric
26.8
max: 27.0
Minimum Recommended Value: 10.0
Hostname Device Hostname
Data VLAN Same Tag as BN
Latitude 12.345678 °
Longitude 123.45678 °
Tilt 5.0 °
Height (AGL) eg. 4.1 (1 decimal place) m
Azimuth 100.0 °
SUBMIT CHANGES
BN Search History
Planning ID
Operating Frequency
Search Metric
Air Interface Protocol
1.0.0
3610 MHz
34.9
Compatible
BN Connection History
BN Serial
Planning ID
Last Connect Time
Last Disconnect Time
Last Disconnect Reason
No rows found
© 2023 Tarana Wireless

Configure Geographic and Orientation Parameters

The geographic parameters—latitude, longitude, and height—and orientation parameters—azimuth and tilt—of a remote node are collectively referred to as the installation parameters. On the RN-3 and RN-5, you must configure installation parameters manually in TCS or in the device UI. The RN-6 and RNv-6 obtain longitude and latitude using their GPS sensors.

CAUTION

CBRS is tightly regulated by the FCC (USA) and requires a valid CPI ID to acquire spectrum. When you change installation parameters of a CBRS device, TCS prompts you for the CPI ID so that the SAS can re-provision available spectrum.

You can enter the string **use_from_tcs** (not case sensitive) in your User Profile instead of a CPI ID. TCS holds the device information but doesn't add the remote node until a user with NOC OP or OP Admin permissions enters the CPI ID along with installation parameters.

- **Latitude**: Geographical latitude of the remote node in decimal notation.
- **Longitude**: Geographical longitude of the remote node in decimal notation.
- **Tilt**: Vertical (elevation) angle of device installation as measured from the horizon (0 degrees).
- **Height**: For RN-5 remote nodes, this is the installed height above ground level (AGL).
- **Azimuth**: Horizontal angle of device installation as measured clockwise from north.

NOTE

To modify a setting, make the change then select **Submit Changes**. On an RN-5 remote node, configuration changes are immediately applied.

For RN-5 remote nodes, the latitude and longitude are only necessary for an accurate Map View in TCS. The Height, Tilt, and Azimuth are optional.

Do not use the remote node web UI to configure the device after deployment. TCS configuration overwrites all local device configuration.

Adjust the Tilt

Tilt is an important parameter and some restrictions apply to RN-5, RN-6, RNv-6, and RN2-3+6 remote nodes operating in the FCC regulatory domain.

Tarana Wireless, Inc. © 2025 All rights reserved

When adjusting the tilt to align vertically with the base node, use a digital level to ensure that the positive tilt does not exceed 12 degrees. Likewise, to align with a base node that is at a lower elevation, ensure that the negative tilt does not exceed -5 degrees.

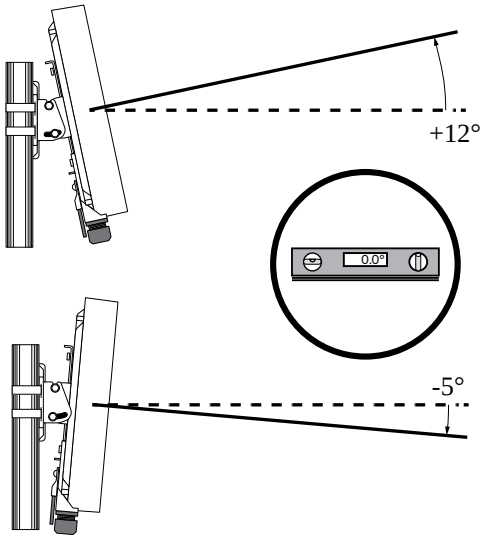

WARNING
Do not measure the tilt angle using the mounting pole or surface as a reference because it introduces error that can affect whether your installation complies with the law.

Confirm Operation in Tarana Cloud Suite (TCS)

To verify the remote node is accessible from the Tarana Cloud Suite (TCS), use an Internet connection external to the remote node.

1. Navigate to tcs.taranawireless.com, and then log in to TCS using the username and password provided by the network administration.
2. Navigate to Devices > List, and then select **RN** to view the list of remote nodes.
3. Verify the remote node is online. When the remote node is online, its Serial Number appears in blue in TCS.

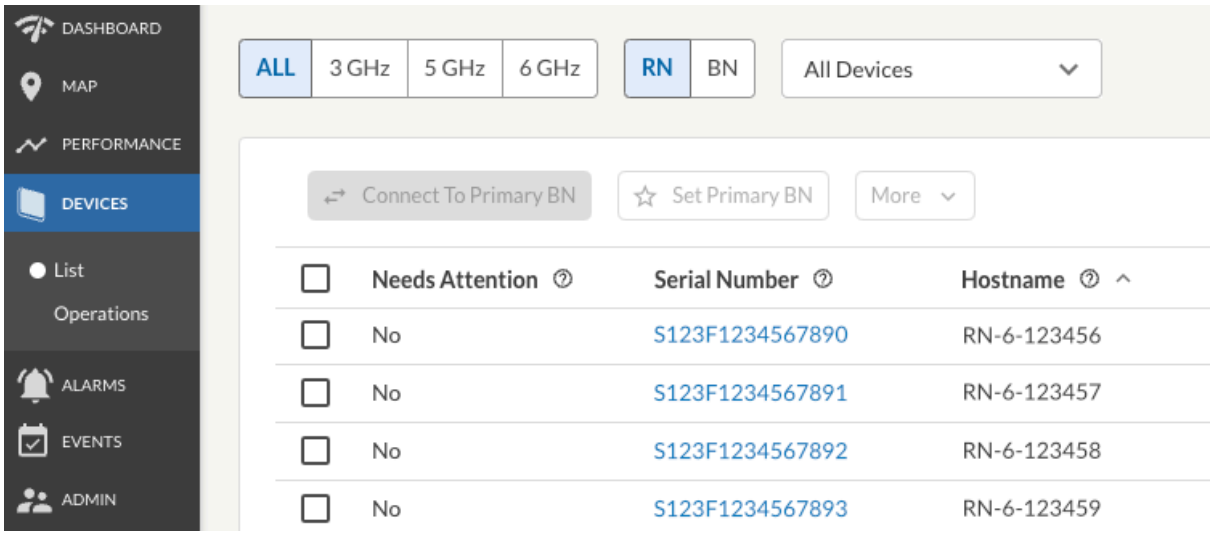
DASHBOARD
MAP
PERFORMANCE
DEVICES
List
Operations
ALARMS
EVENTS
ADMIN
ALL
3 GHz
5 GHz
6 GHz
RN
BN
All Devices
Connect To Primary BN
Set Primary BN
More
Needs Attention
Serial Number
Hostname
No
S123F1234567890
RN-6-123456
No
S123F1234567891
RN-6-123457
No
S123F1234567892
RN-6-123458
No
S123F1234567893
RN-6-123459

Beamwidth Reference

Refer to the following table of horizontal and vertical beamwidths for base nodes.

	G1 BN-3 CBRS	G1 BN-5	G1 BN-6	G2 BN-3+6
3 dB Horizontal Beamwidth	68˚	64˚	60˚	Low Band: 80º High Band: 60º
6 dB Horizontal Beamwidth	98˚	98˚	95˚	Low Band: 115º High Band: 87º
3 dB Vertical Beamwidth	12.5˚	8.5˚	6.8˚	Low Band: 11.5º High Band: 6.5º
6 dB Vertical Beamwidth	17˚	11.8˚	9.7˚	Low Band: 16.5º High Band: 10.5º

ELECTRICAL TILT

G1 BN-3 base nodes have an electrical tilt of -3.5º. This means that when the G1 BN-3 base node is aimed parallel to the ground, the actual beam center is angled toward the ground by 3.5º. G2 base nodes that operate in the 3 GHz band do not have an electrical tilt.

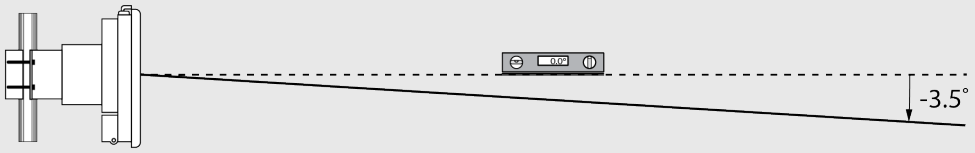

Refer to the following table of horizontal and vertical remote node beamwidths:

	RN-3 CBRS	RN-5	RN-6	RNv-6	RN-M
3 dB Horizontal Beamwidth	63˚	58˚	66˚	15º	Low Band: 70º High Band: 50º
6 dB Horizontal Beamwidth	95˚	83˚	97˚	20º	Low Band: 102º High Band: 73º
3 dB Vertical Beamwidth	17.6˚	14˚	12.1˚	16º	Low Band: 19º High Band: 11º

Tarana Wireless, Inc. © 2025 All rights reserved

	RN-3 CBRS	RN-5	RN-6	RNv-6	RN-M
6 dB Vertical Beamwidth	24.3˚	19.5˚	16.4˚	22°	Low Band: 28° High Band: 14°

Regulatory and Compliance Information

This section contains information regarding safe and correct remote node installation.

You can find current declarations of conformance at the following URL:

https://www.taranawireless.com/legal/#declarations-of-conformity

U-NII Band Support

The following table provides information about U-NII bands 3 to 7, their respective frequency ranges, and whether each is governed by the FCC or ISED. Refer to it to determine whether your device supports the following U-NII bands in your regulatory domain:

U-NII Band	Frequency Range (GHz)	FCC (USA)	ISED (Canada)
U-NII-3	5.725-5.850	Yes	Yes
U-NII-4	5.850–5.925	No	Yes
U-NII-5	5.925–6.425	Yes	Yes
U-NII-6	6.425–6.525	No	Yes
U-NII-7	6.525–6.875	Yes	Yes

Regulatory Standard

Compliance Domain	Regulatory Standard
Safety	EN IEC 62368-1:2020+A11:2020, 3rd Edition IEC 60950-22:2016 for use in conjunction with IEC 60950-1:2005, AMD1:2009, AMD2:2013 IEC 60529, Edition 2.2 - 2013-08 IEC/EN 60950-22
Radio Approvals	FCC Part 15 Subpart E §15.407 RSS 247 and RSS 248 FCC Part 96 WINNF-TS-0122 Version V1.0.2
EMI and Susceptibility	ISED ICES-003 Issue 7 Class B FCC 47 CFR FCC Part 15 Subpart B Class B CAN ICES-(B)/NMB-(B)

Tarana Wireless, Inc. © 2025 All rights reserved

Compliance Domain	Regulatory Standard
RF Exposure	FCC 47 CFR FCC Part 1.1307 RSS 102

FCC Statement (US Deployment)

This device complies with FCC Part 15 rules. Operation is subject to the following two conditions:

- This device may not cause harmful interference, and
- This device must accept any interference received, including interference that may cause undesired operation.

The operation of this device is prohibited on oil platforms, cars, trains, boats, and aircraft.

Operation of transmitters in the 5.925 - 7.125 GHz band is prohibited for control of or communications with unmanned aircraft systems.

Modifications not expressly approved by Tarana Wireless Inc. could void the user's authority to operate the equipment.

NOTE

This equipment has been tested and found to comply with the limits for a Class B digital device, pursuant to part 15 of the FCC Rules. These limits are designed to provide reasonable protection against harmful interference in a residential installation. This equipment generates, uses and can radiate radio frequency energy and, if not installed and used in accordance with the instructions, may cause harmful interference to radio communications. However, there is no guarantee that interference will not occur in a particular installation. If this equipment does cause harmful interference to radio or television reception, which can be determined by turning the equipment off and on, the user is encouraged to try to correct the interference by one or more of the following measures:

- Reorient or relocate the receiving antenna.
- Increase the separation between the equipment and receiver.
- Connect the equipment into an outlet on a circuit different from that to which the receiver is connected.
- Consult the dealer or an experienced radio/TV technician for help.

This device complies with FCC RF exposure limits. This equipment should be installed and operated with a minimum distance between the radiator and user as defined in the Exposure Safety table. This transmitter must not be co-located or operating in conjunction with any other antenna or transmitter.

Tarana Wireless, Inc. © 2025 All rights reserved

Industry Canada Statement (Canada Deployment) - EN

This Class B Digital apparatus meets all the requirements of ICES-003.

To satisfy IC RF exposure requirements for RF transmitting devices, a safe distance must be maintained between the antenna of this device and persons during device operation as referenced in the Exposure Safety table.

This device has been designed to ensure that radio frequency emissions are maintained within the band of operation under all normal operating conditions listed in this manual.

Devices shall not be used for control of or communications with unmanned aircraft systems.

Devices shall not be used on oil platforms.

Devices shall not be used on aircraft, except for the low-power indoor access points, indoor subordinate devices, low-power client devices, and very low-power devices operating in the 5925-6425 MHz band, that may be used on large aircraft as defined in the Canadian Aviation Regulations, while flying above 3,048 metres (10,000 feet).

Devices shall not be used on automobiles.

Devices shall not be used on trains.

Devices shall not be used on maritime vessels.

This device complies with Industry Canada RSS standard(s). Operation is subject to the following two conditions:

- This device may not cause interference, and
- This device must accept any interference, including interference that may cause undesired operation of the device.

The antenna height shall be determined by the installer or operator of the standard-power access point or fixed client device, or by automatic means. This information shall be stored internally in the device. Provision of accurate device information is mandatory.

The user manual shall also include instructions for the installer or user to input the antenna height as part of device registration.

Modification not expressly approved by Tarana Wireless, Inc., could void the user's authority to operate the equipment.

Industry Canada Statement (Canada Deployment) - FR

Cet appareil numérique de la classe B est conforme à la norme NMB-003 du Canada.

Dans l'ordre de satisfaire les réglementations des appareils qui émettent par radio, une distance minimum, spécifiée par la table d'exposition, entre les antennes et l'opérateur doit être maintenue durant les opérations de radio.

Ce dispositif a été conçu pour veiller à ce que les émissions de radiofréquences sont maintenus dans la bande de fonctionnement dans toutes les conditions normales de fonctionnement figurant dans ce manuel.

Les appareils ne doivent pas être utilisés pour contrôler ou communiquer avec des systèmes d'aéronefs sans pilote.

Les appareils ne doivent pas être utilisés sur les plates-formes pétrolières.

Les appareils ne doivent pas être utilisés sur les avions, à l'exception des points d'accès intérieure à faible puissance, des dispositifs subordonnés intérieurs, des dispositifs clients de faible puissance et des dispositifs de très faible puissance fonctionnant dans la bande 5925-6425 MHz, qui peut être utilisée sur de grands avions tel que défini dans la réglementation de l'aviation canadienne, tout en volant au-dessus de 3 048 mètres (10 000 pieds).

Les appareils ne doivent pas être utilisés sur les automobiles.

Les appareils ne doivent pas être utilisés dans les trains.

Les appareils ne doivent pas être utilisés sur les navires maritimes.

Cet appareil est conforme la norme d'Industrie Canada RSS (s). Son fonctionnement est soumis aux deux conditions suivantes:

- Cet appareil ne peut pas causer d'interférences, et.
- Cet appareil doit accepter toute interférence, y compris les interférences qui peuvent causer un mauvais fonctionnement de l'appareil.

La hauteur de l'antenne doit être déterminée par l'installateur ou l'opérateur du point d'access, sous tension standard, ou du dispositif client fixe, ou par des moyens automatiques. Ces informations doivent être stockées dans l'appareil. La messure de la hauteur doit etre obligatoirement precise.

Le manuel d'utilisation doit également inclure des instructions permettant à l'installateur ou à l'utilisateur de saisir la hauteur de l'antenne durant l'installation de l'appareil.

Tarana Wireless, Inc. © 2025 All rights reserved

Tarana Wireless, Inc. n'approuve aucune modification apportée à l'appareil par l'utilisateur, quelle qu'en soit la nature. Tout changement ou modification peuvent annuler le droit d'utilisation de l'appareil par l'utilisateur.

EU and UK Statement

DECLARATION OF CONFORMITY

Operating Frequency Band: 5725 MHz – 5785 MHz

Maximum output power: 36 dBm/40 MHz

Hereby, Tarana Wireless Inc. declares that the 5.8 GHz Remote Node is in compliance with Directive 2014/53/EU and UK Radio Equipment Regulations 2017 (SI 2017/1206).

The full context of the EU declaration of conformity is available at the following URL:

https://www.taranawireless.com/legal/#declarations-of-conformity

Recycling

The crossed out wheeled bin symbol on your product and/or accessories means that the item is classified as electrical and electronic equipment. Such items should not be mixed with general household waste, and must be taken to dedicated collection points at the end of their working life for proper treatment, recovery and recycling. This way you help save valuable resources and promote recycling of materials.

Resolution 680: Brazil

Regulamento Anatel sobre equipamentos de Radiocomunicação de Radiação Restrita (Resolução nº 680): “Este equipamento não tem direito à proteção contra interferência prejudicial e não pode causar interferência em sistemas devidamente autorizados – Para maiores informações, consulte o site da Anatel https://www.gov.br/anatel/pt-br/.

Remote Node Homologation Country List

The following remote nodes are approved (homologated) for operation in the following countries by the respective regulatory body in parentheses.

RN-5 remote note model G1RN5ASI012

- Argentina (ENACOM)
- Australia (ACMA)
- Botswana (BOCRA)
- Brazil (Anatel)
- Canada ISED (RSS-247)
- Cameroon (ART)
- Colombia (CRC)
- Costa Rica (SUTEL)
- Eswatini (ESCCOM)
- European Union (CE)
- Ghana (NCA)
- Kenya (CAK)
- Liberia (LTA)
- Libya (ACI)
- Mexico (NOM-019 and NOM-208)
- Mozambique (INCM)
- Namibia (CRAN)
- Nigeria (NCC)
- Paraguay (CONATEL)
- Peru (MTC)
- Philippines (NTC)
- Saudi Arabia (CITC)
- South Africa (ICASA)
- UAE (TDRA)

Tarana Wireless, Inc. © 2025 All rights reserved

- Uganda (UCC)
- Uruguay (URSEC)
- USA FCC (Part 15E)
- Venezuela (CONATEL)

RN-5 remote node model G1RN5AHB012

- Argentina (ENACOM)
- Australia (RCM)
- Barbados (MIST)
- Benin (ARCEP)
- Botswana (BOCRA)
- Brazil (ANATEL)
- Burkina Faso (ARCEP)
- Cameroon (ART)
- Canada ISED (RSS-247)
- Chile (SUBTEL)
- Columbia (CRC)
- Congo, Democratic Republic of (ARPTC)
- Congo, Republic of (ARPCE)
- Costa Rica (SUTEL)
- Dominican Republic (INDOTEL)
- Eswatini (ESCCOM)
- European Union (CE)
- Ghana (NCA)
- Hong Kong (OFCA)
- Indonesia (SDPPI)
- Kenya (CAK)
- Liberia (LTA)

Tarana Wireless, Inc. © 2025 All rights reserved

- Libya (ACI)
- Malaysia (SIRIM)
- Mexico (NOM-019 and NOM-208)
- Namibia (CRAN)
- New Zealand (RSM)
- Nigeria (NCC)
- Oman (TRA)
- Paraguay (CONATEL)
- Peru (MTC)
- Philippines (NTC)
- Saudi Arabia (CITC)
- Senegal (ARTP)
- South Africa (ICASA)
- Suirname (TAS)
- Togo (ARCEP)
- UAE (TDRA)
- Uganda (UCC)
- UK (UKCA)
- Uruguay (URSEC)
- USA FCC (Part 15E)
- Venezuela (CONATEL)
- Vietnam (MIC)

RNv-6 remote note model G1RN6AHI042

- Australia (ACMA)
- Canada (ISED)
- USA FCC (Part 15E)

CBRS Required Information

The Tarana remote node must be installed by a certified professional installer (CPI) as defined in Section 96.39 and 96.45 of FCC part 96 requirements. The remote node is Classified as a Category B CBSD (Citizen Broadband Radio Device), which requires the following information be recorded and uploaded as part of the CPI process per section 96.45.

The FCC regulates CBRS devices (CBSDs) and categorizes them as Category A or Category B devices. CBSD categories are defined in 47 CFR Part 96 Section 96.3:

https://www.ecfr.gov/current/title-47/chapter-I/subchapter-D/part-96/subpart-A/section-96.3

The FCC also records or monitors several parameters to manage the CBRS spectrum. The following table describes the parameters that are required for CBRS Category A and B devices.

Parameter	Description	Required for Category A Devices	Required for Category B Devices
Geographic Location	Latitude and longitude values of the device	Yes	Yes
Antenna Height (AGL)	Height of the installed device above the ground	Yes	Yes
CBSD Class	Refers to the Category (A or B) of the device	Yes	Yes
Requested Authorization Status	PAL (priority access license), a paid service with higher access priority or GAA (general authorized access), which has no licensing costs but is a lower priority than PAL.	Yes	Yes
FCC ID	Unique identifier for CBRS transmitters, issued by the FCC	Yes	Yes
Call Sign (PAL Only)	Unique identifier for CBRS stations, issued by the FCC	Yes	Yes
User Contact Information	User name, email, phone number	Yes	Yes
Air Interference Technology		Yes	Yes
Serial Number	Device serial number	Yes	Yes
Sensing Capability		Yes	Yes
Limited to Outdoor Operation	Lower-power devices can operate indoors or outdoors. Higher-power devices cannot operate indoors and must operate outdoors only.	No	Yes
Antenna Gain	The gain of an antenna is related to its directionality.	No	Yes

Tarana Wireless, Inc. © 2025 All rights reserved

Parameter	Description	Required for Category A Devices	Required for Category B Devices
Antenna Beam Width	The beam of highly directional antennas has two properties: the beam height is the vertical angle that contains the beam; the beam width is the horizontal angle that contains the beam.	No	Yes
Antenna Azimuth	The compass direction of the antenna in decimal degrees, where 0 degrees is true north.	No	Yes
Antenna Tilt Angle		No	Yes

Tarana Wireless, Inc. © 2025 All rights reserved

Warranty

Tarana warrants that commencing from the date of shipment to you (and in case of resale to you by a Tarana partner, commencing not more than 90 days after our original shipment), and continuing for a period of twelve (12) months, the hardware will be free from defects in material and workmanship under normal use. This limited warranty is not transferable. Your sole and exclusive remedy and our entire liability under this limited warranty will be, at our option, shipment of a replacement or a refund of the purchase price, if you notify us of the defect within the warranty period and return the hardware to us freight and insurance prepaid. Parts used in replacement may be new or reconditioned. Our obligations are conditioned upon the return of affected hardware in accordance with our then-current standard Return Material Authorization (RMA) procedures. This limited warranty does not cover (a) damage resulting from (i) use in other than the wireless transport applications defined in our product documentation; (ii) use not in accord with applicable spectrum regulations; (iii) handling, testing, installation, operation, maintenance, service, repair, alteration, modification, or adjustment outside of practices and conditions defined in our product documentation; (iv) other general misuse, accident, liquid intrusion, or neglect; (v) unauthorized radio connection to equipment not supplied by us; (vi) illegal or unauthorized alteration of software or firmware; (vii) acts of nature (such as lightning) or performance failure of other equipment (including electrical transients and over/under voltage); (b) scratches, discoloration, or other cosmetic damage to surfaces that do not affect operation; (c) normal and customary wear and tear; and (d) any product where serial number, revision level, part number, date code, warranty data, tamper-proof seals, or quality assurance decals have been removed or altered.

DISCLAIMER: Except as specified above, all express or implied conditions, representations, and warranties including, without limitation, any implied warranty or condition of merchantability, fitness for a particular purpose, non-infringement, satisfactory quality, non-interference, accuracy of informational content, or arising from a course of dealing, law, usage, or trade practice, are hereby excluded to the extent allowed by applicable law and are expressly disclaimed by us. To the extent an implied warranty cannot be excluded, such warranty is limited in duration to the express warranty period. This disclaimer and exclusion will apply even if the express warranty set forth above fails of its essential purpose.

Tarana products are not designed, intended, or certified for use in communication systems for, or relating to (a) weapons or weapons systems, (b) nuclear facilities, (c) air traffic control or other mass transportation systems, (d) life support systems or other medical devices, (e) applications where electrical sparks could trigger explosions or fires, or (f) any other systems, devices or applications in which the failure of the product to operate as intended may lead to death, bodily injury, or catastrophic property damage (each an

Tarana Wireless, Inc. © 2025 All rights reserved

“Unauthorized Use”).. Many of such Unauthorized Uses would require specific industry certification which has not been sought or obtained for the Tarana products.

LIABILITY. Tarana will not be liable for any special, incidental, indirect, or consequential damages (including lost profits or property damage) arising out of or relating to the sale of the goods to you or your possession, installation, use, operation or repair of the goods, even if the goods are nonconforming, defective, infringing, delayed, or not delivered, and even if Tarana has been advised of the possibility of such damages. You agree to indemnify and hold us harmless from any claims, suits, demands and causes of action arising out of or relating to your possession, installation, use, operation or repair of the goods. Notwithstanding any other provisions of this document, in no event will our total liability in connection with or relating to the goods exceed the amount you have paid us for the goods.

Tarana Wireless, Inc. © 2025 All rights reserved