FCC Test Report

FCC ID: 2ABS5-HLCRIO135

Product: Easy One Touch 4 Wireless

Trade Name: iottie

Model Number: HLCRIO134

Family Model: HLCRIO135,HLCRIO136

Report No.: S21011501202001

Prepared for

HSM CO.,LTD

2F Yeong-jae Bldg.,40,Nonhyeon-ro 24gil,Gangnam-gu,South Korea 135-855

Prepared by

Shenzhen NTEK Testing Technology Co., Ltd.

1/F, Building E, Fenda Science Park, Sanwei Community, Xixiang Street,
Bao'an District, Shenzhen P.R. China

Tel:400-800-6106 , 0755-3699-5508
Website: www.ntek.org.cn

TEST RESULT CERTIFICATION

Applicant's name..... : HSM CO.,LTD

Address..... : 2F Yeong-jae Bldg.,40,Nonhyeon-ro 24gil,Gangnam-gu,South Korea 135-855

Manufacturer's Name.....: Shenzhen Hengtai Ying Technology Co., Ltd

Address..... : 2F,11Block,Kaetat Industrial Park,Liaokeng Village, Shiyan Street, Bao' an District, Shenzhen, Guangdong, China

Factory's Name..... : Shenzhen Hengtai Ying Technology Co., Ltd

Address..... : 2F,11Block,Kaetat Industrial Park,Liaokeng Village, Shiyan Street, Bao' an District,Shenzhen,Guangdong,China

Product description

Product name..... : Easy One Touch 4 Wireless

Model and/or type reference . : HLCRIO134

Standards.....: FCC part 15C
ANSI C63.10:2013
KDB 680106 D01 RF Exposure Wireless Charging App v03

This device described above has been tested by Shenzhen NTEK Testing Technology Co., Ltd., and the test results show that the equipment under test (EUT) is in compliance with the FCC requirements. And it is applicable only to the tested sample identified in the report.
This report shall not be reproduced except in full, without the written approval of Shenzhen NTEK Testing Technology Co., Ltd., this document may be altered or revised by Shenzhen NTEK Testing Technology Co., Ltd., personnel only, and shall be noted in the revision of the document.

The test results of this report relate only to the tested sample identified in this report.

Date of Test..... :

Date (s) of performance of tests.....: 15 Jan. 2021 ~ 29 Jan. 2021

Date of Issue..... : 29 Jan. 2021

Test Result..... : **Pass**

Testing Engineer : Mary. Hu

(Mary Hu)

Technical Manager : Jasonchen

(Jason Chen)

Authorized Signatory : Alex

(Alex Li)

Table of Contents Page

1 . TEST SUMMARY 4
1.1 FACILITIES AND ACCREDITATIONS 5
1.2 LABORATORY ACCREDITATIONS AND LISTINGS 5
1.3 MEASUREMENT UNCERTAINTY 5
2 . GENERAL INFORMATION 7
2.1 GENERAL DESCRIPTION OF EUT 7
2.2 DESCRIPTION OF TEST SETUP 9
2.3 DESCRIPTION TEST PERIPHERAL AND EUT PERIPHERAL 10
2.4 MEASUREMENT INSTRUMENTS LIST 11
3 . EMC EMISSION TEST 12
3.1 CONDUCTED EMISSION MEASUREMENT 12
3.1.1 POWER LINE CONDUCTED EMISSION 12
3.1.2 TEST PROCEDURE 13
3.1.3 TEST SETUP 13
3.1.4 EUT OPERATING CONDITIONS 13
3.1.5 TEST RESULTS 14
3.2 RADIATED EMISSION MEASUREMENT 16
3.2.1 LIMITS OF RADIATED EMISSION MEASUREMENT 16
3.2.2 TEST PROCEDURE 17
3.2.3 TEST SETUP 18
3.2.4 TEST RESULTS 19
4. BANDWIDTH TEST 24
4.1 TEST PROCEDURE 24
4.2 TEST SETUP 24
4.3 TEST RESULT 24
5. ANTENNA APPLICATION 25
5.1 Antenna Requirement 25
5.2 Result 25

. TEST SUMMARY

Test procedures according to the technical standards:

EMC Emission					
Standard	Test Item	FCC Rules	Limit	Judgment	Remark
FCC part 15C:2018 ANSI C63.10:2013	Conducted Emission	§15.207	Class B	PASS	
	Radiated Emission	§15.209	Class B	PASS	
	ANTENNA APPLICATION	§15.203	/	PASS	

NOTE:

(1) 'N/A' denotes test is not applicable in this Test Report

(2) For client's request and manual description, the test will not be executed.

1.1 FACILITIES AND ACCREDITATIONS

All measurement facilities used to collect the measurement data are located at 1/F, Building E, Fenda Science Park, Sanwei Community, Xixiang Street, Bao'an District, Shenzhen 518126 P.R. China.

The sites are constructed in conformance with the requirements of ANSI C63.7, ANSI C63.10 and CISPR Publication 22.

1.2 LABORATORY ACCREDITATIONS AND LISTINGS

Site Description

CNAS-Lab.	:	The Laboratory has been assessed and proved to be in compliance with CNAS-CL01:2006 (identical to ISO/IEC 17025:2005) The Certificate Registration Number is L5516.
IC-Registration	:	The Certificate Registration Number is 9270A-1.
FCC- Accredited	:	Test Firm Registration Number: 463705. Designation Number: CN1184
A2LA-Lab.	:	The Certificate Registration Number is 4298.01 This laboratory is accredited in accordance with the recognized International Standard ISO/IEC 17025:2005 General requirements for the competence of testing and calibration laboratories. This accreditation demonstrates technical competence for a defined scope and the operation of a laboratory quality management system (refer to joint ISO-ILAC-IAF Communiqué dated 8 January 2009).
Name of Firm	:	Shenzhen NTEK Testing Technology Co., Ltd.
Site Location	:	1/F, Building E, Fenda Science Park, Sanwei Community, Xixiang Street, Bao'an District, Shenzhen 518126 P.R. China.

1.3 MEASUREMENT UNCERTAINTY

The reported uncertainty of measurement **y ± U**, where expended uncertainty **U** is based on a standard uncertainty multiplied by a coverage factor of **k=2**, providing a level of confidence of approximately **95** %.

A. Conducted Measurement :

Test Site	Method	Measurement Frequency Range	U, (dB)	NOTE
NTEKC01	ANSI	150 KHz ~ 30MHz	3.2	

B. Radiated Measurement :

Test Site	Method	Measurement Frequency Range	U, (dB)	NOTE
NTEKA01	ANSI	30MHz ~ 1000MHz	4.7	
		1GHz ~12.4GHz	5.0	

Revision History

Report No.	Version	Description	Issued Date
S21011501202001	Rev.01	Initial issue of report	29 Jan. 2021

. GENERAL INFORMATION

GENERAL DESCRIPTION OF EUT

Product Feature and Specification	
Equipment	Easy One Touch 4 Wireless
Trade Name	iottie
FCC ID	2ABS5-HLCRIO135
Sample no.	S210104004005
Model No.	HLCRIO134
Family Model	HLCRIO135,HLCRIO136
Model Difference	All the model are the same circuit and RF module, except the shape of model's base.
Operating Frequency	111KHz~175KHz
Modulation Technique	Induction
Antenna Type	Induction coil
Power supply	☒ DC supply: Input: DC 12V-24V Output: 5V-3A/9V-2A/12V-1.5A
	☐ Adapter supply:
Output	Wireless Output: 5W/7.5W/10W/15W
Battery	N/A
HW Version	N/A
SW Version	N/A

DESCRIPTION OF TEST MODES

EUT Configuration

The EUT configuration for testing is installed on RF field strength measurement to meet the Commissions requirement and operating in a manner which intends to maximize its emission characteristics in a continuous normal application.

EUT Exercise

The Transmitter was operated in the normal operating mode. The TX frequency was fixed which was for the purpose of the measurements.

The following summary table is showing all test modes to demonstrate in compliance with the standard.

Test Cases	
Test Item	Data Rate/ Modulation
AC Conducted Emission	Mode 1: Max load*
Radiated Test Cases	Mode 1: Max load

(*)EUT can only access the specified load, can not adjust the size of the load

Carrier Frequency and Channel list:

Channel	Frequency(MHz)
1	0.111
2	0.155
3	0.175

DESCRIPTION OF TEST SETUP

For AC Conducted Emission Mode

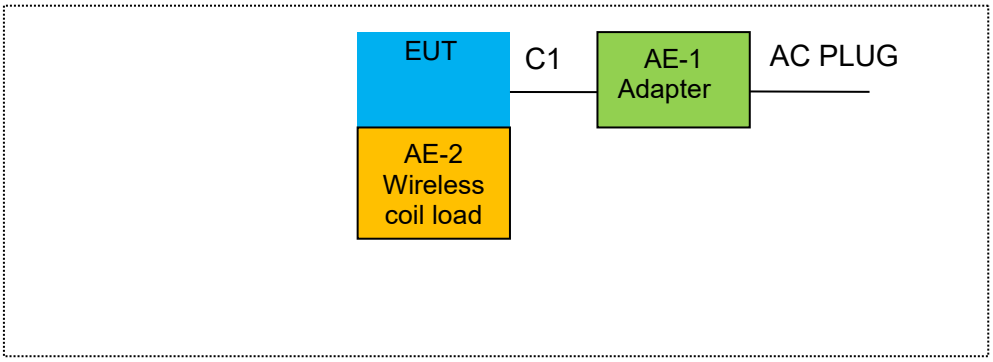

For Radiated Test Cases

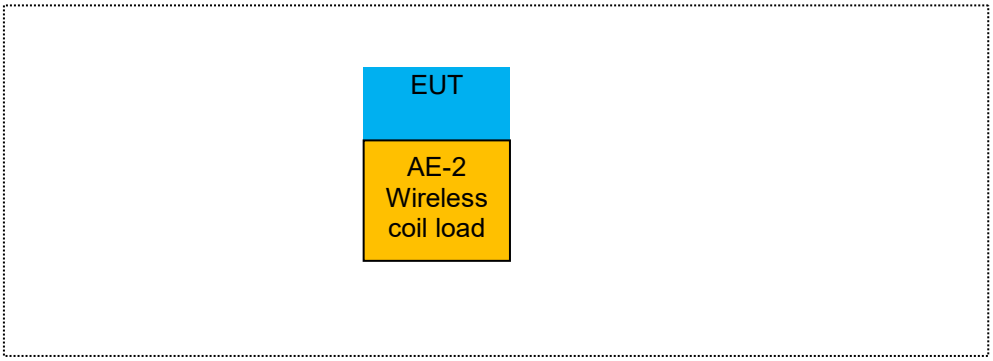

DESCRIPTION TEST PERIPHERAL AND EUT PERIPHERAL

The EUT has been tested as an independent unit together with other necessary accessories or support units. The following support units or accessories were used to form a representative test configuration during the tests.

Item	Equipment	Brand	Model/Type No.	Series No.	Note
AE-1	Adapter	N/A	N/A	N/A	Peripherals
AE-2	Adjustable wireless coil load	iottie	N/A	N/A	Peripherals

Item	Cable Type	Shielded Type	Ferrite Core	Length	Note
C-1	USB cable	YES	NO	0.8m	

Note:

(1) The support equipment was authorized by Declaration of Confirmation.

(2) For detachable type I/O cable should be specified the length in cm in 『Length』 column.

(3) “YES” means “shielded” “with core”; “NO” means “unshielded” “without core”.

MEASUREMENT INSTRUMENTS LIST

Radiation Test equipment

	Kind of Equipment	Manufacturer	Type No.	Serial No.	Last calibration	Calibrated until	Calibration period
1	Spectrum Analyzer	Aglient	E4407B	MY45108040	2020.05.11	2021.05.10	1 year
2	Spectrum Analyzer	Agilent	N9020A	MY49100060	2020.07.13	2021.07.12	1 year
4	Test Receiver	R&S	ESPI	101318	2020.05.11	2021.05.10	1 year
5	Bilog Antenna	TESEQ	CBL6111D	31216	2020.04.11	2021.04.10	1 year
6	50Ω Coaxial Switch	Anritsu	MP59B	6200983705	2020.05.11	2023.05.10	1 year
7	Amplifier	EMC	EMC051835 SE	980246	2020.07.13	2021.07.12	1 year
8	Amplifier	MITEQ	TTA1840-35-HG	177156	2020.07.13	2021.07.12	1 year
9	Loop Antenna	ARA	PLA-1030/B	1029	2020.07.13	2021.07.12	1 year
10	Test Cable (9KHz-30MHz)	N/A	R-01	N/A	2019.08.06	2022.08.05	3 year
11	Test Cable (30MHz-1GHz)	N/A	R-02	N/A	2019.08.06	2022.08.05	3 year

Conduction Test equipment

Item	Kind of Equipment	Manufacturer	Type No.	Serial No.	Last calibration	Calibrated until	Calibration period
1	Test Receiver	R&S	ESCI	101160	2020.05.11	2021.05.10	1 year
2	LISN	R&S	ENV216	101313	2020.05.11	2021.05.10	1 year
3	LISN	SCHWARZBECK	NNLK 8129	8129245	2020.05.11	2021.05.10	1 year
4	50Ω Coaxial Switch	ANRITSU CORP	MP59B	6200983704	2020.05.11	2023.05.10	1 year
5	Test Cable (9KHz-30MHz)	N/A	C01	N/A	2020.05.11	2023.05.10	3 year
6	Test Cable (9KHz-30MHz)	N/A	C02	N/A	2020.05.11	2023.05.10	3 year
7	Test Cable (9KHz-30MHz)	N/A	C03	N/A	2020.05.11	2023.05.10	3 year

. EMC EMISSION TEST

CONDUCTED EMISSION MEASUREMENT

POWER LINE CONDUCTED EMISSION (Frequency Range 150KHz-30MHz)

FREQUENCY (MHz)	limit	
	Quasi-peak	Average
0.15 -0.5	66 - 56 *	56 - 46 *
0.50 -5.0	56.00	46.00
5.0 -30.0	60.00	50.00

Note:

(1) The tighter limit applies at the band edges.

(2) The limit of " * " marked band means the limitation decreases linearly with the logarithm of the frequency in the range.

The following table is the setting of the receiver

Receiver Parameters	Setting
Attenuation	10 dB
Start Frequency	0.15 MHz
Stop Frequency	30 MHz
IF Bandwidth	9 kHz

TEST PROCEDURE

a. The EUT was placed 0.8 meters from the horizontal ground plane with EUT being connected to the power mains through a line impedance stabilization network (LISN). All other support equipments powered from additional LISN(s). The LISN provide 50 Ohm/ 50uH of coupling impedance for the measuring instrument.
b. Interconnecting cables that hang closer than 40 cm to the ground plane shall be folded back and forth in the center forming a bundle 30 to 40 cm long.
c. I/O cables that are not connected to a peripheral shall be bundled in the center. The end of the cable may be terminated, if required, using the correct terminating impedance. The overall length shall not exceed 1 m.
d. LISN at least 80 cm from nearest part of EUT chassis.
e. For the actual test configuration, please refer to the related Item –EUT Test Photos.

TEST SETUP

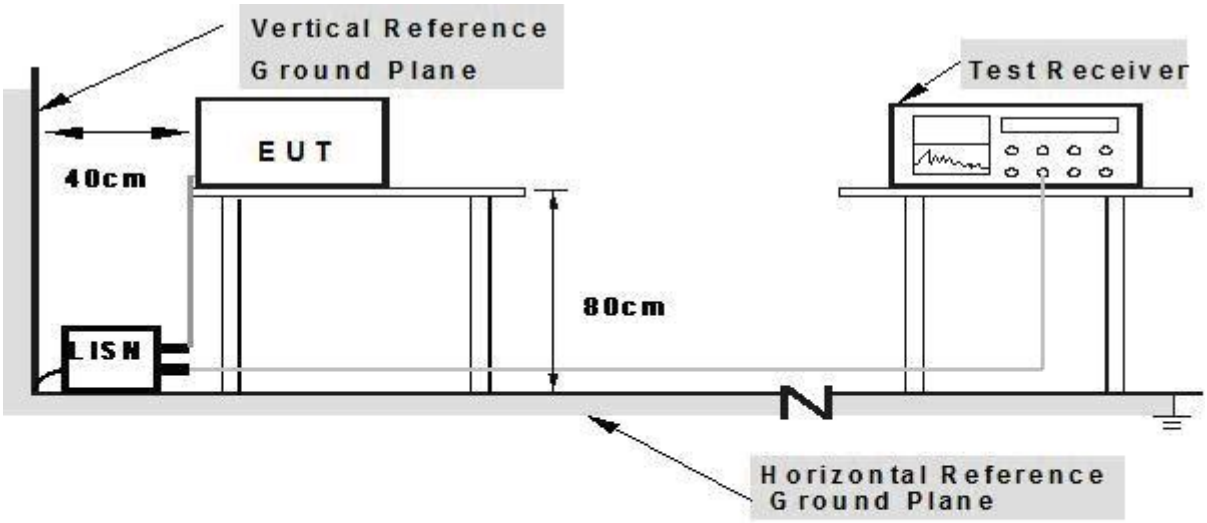

Note: 1.Support units were connected to second LISN.
2.Both of LISNs (AMN) are 80 cm from EUT and at least 80 from other units and other metal planes

EUT OPERATING CONDITIONS

The EUT tested system was configured as the statements of **2.3** Unless otherwise a special operating condition is specified in the follows during the testing.

TEST RESULTS

All the modulation modes have been tested, and the worst result was report as below:

EUT:	Easy One Touch 4 Wireless	Model Name. :	HLCRIO134
Temperature:	26 ℃	Relative Humidity:	54%
Pressure:	1010hPa	Phase :	L
Test Mode:	High frequency/Max Load	Test Voltage:	AC 120V/60Hz

Frequency (MHz)	Reading Level (dBμV)	Correct Factor (dB)	Measure-ment (dBμV)	Limits (dBμV)	Margin (dB)	Remark
0.1620	39.04	9.76	48.80	65.36	-16.56	QP
0.1620	23.56	9.76	33.32	55.36	-22.04	AVG
0.2099	37.72	9.76	47.48	63.21	-15.73	QP
0.2099	20.21	9.76	29.97	53.21	-23.24	AVG
0.2859	36.39	9.75	46.14	60.64	-14.50	QP
0.2859	18.94	9.75	28.69	50.64	-21.95	AVG
0.7259	30.78	9.74	40.52	56.00	-15.48	QP
0.7259	14.22	9.74	23.96	46.00	-22.04	AVG
1.2820	29.77	9.75	39.52	56.00	-16.48	QP
1.2820	15.83	9.75	25.58	46.00	-20.42	AVG

Remark:

1. All readings are Quasi-Peak and Average values.
2. Factor = Insertion Loss + Cable Loss.

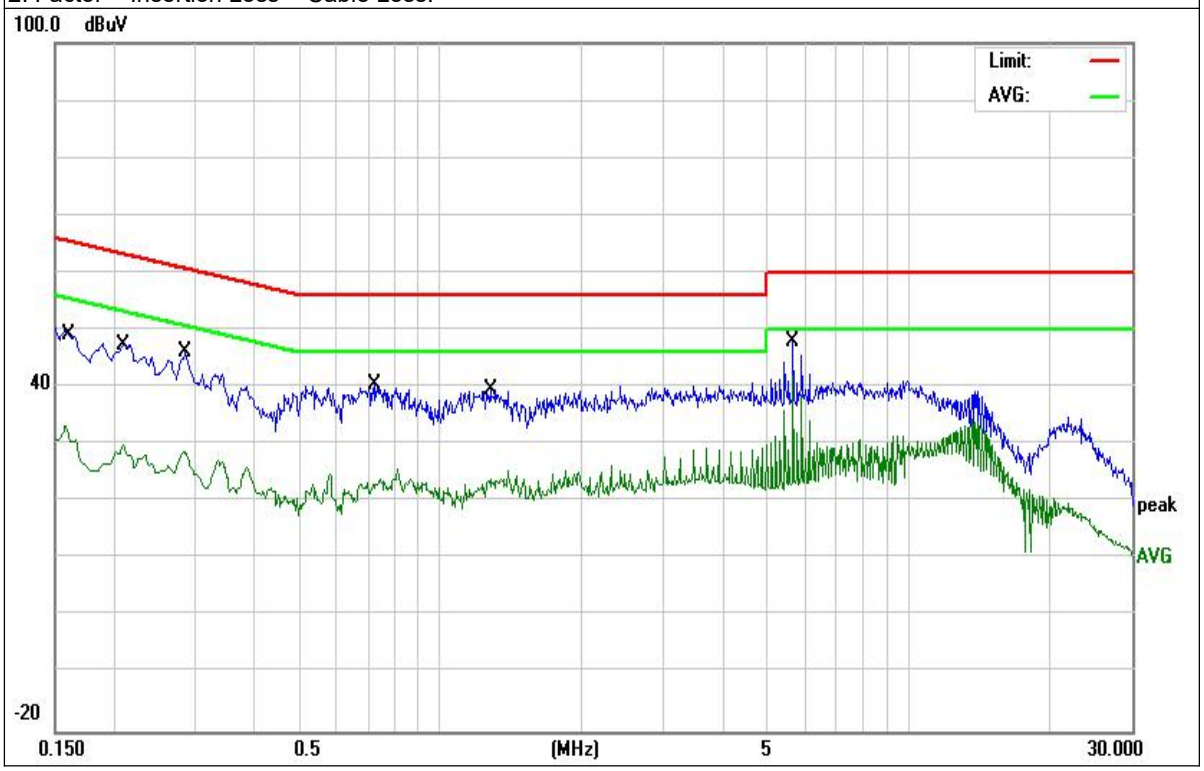

EUT:	Easy One Touch 4 Wireless	Model Name. :	HLCRIO134
Temperature:	26 ℃	Relative Humidity:	54%
Pressure:	1010hPa	Phase :	N
Test Mode:	High frequency/Max Load	Test Voltage:	AC 120V/60Hz

Frequency (MHz)	Reading Level (dBμV)	Correct Factor (dB)	Measure-ment (dBμV)	Limits (dBμV)	Margin (dB)	Remark
0.1539	40.28	9.74	50.02	65.78	-15.76	QP
0.1539	23.85	9.74	33.59	55.78	-22.19	AVG
0.2819	34.57	9.74	44.31	60.76	-16.45	QP
0.2819	20.57	9.74	30.31	50.76	-20.45	AVG
0.7459	31.01	9.75	40.76	56.00	-15.24	QP
0.7459	16.55	9.75	26.30	46.00	-19.70	AVG
1.7500	30.67	9.78	40.45	56.00	-15.55	QP
1.7500	16.40	9.78	26.18	46.00	-19.82	AVG
2.4380	31.33	9.82	41.15	56.00	-14.85	QP
2.4380	16.57	9.82	26.39	46.00	-19.61	AVG

Remark:

1. All readings are Quasi-Peak and Average values.
2. Factor = Insertion Loss + Cable Loss.

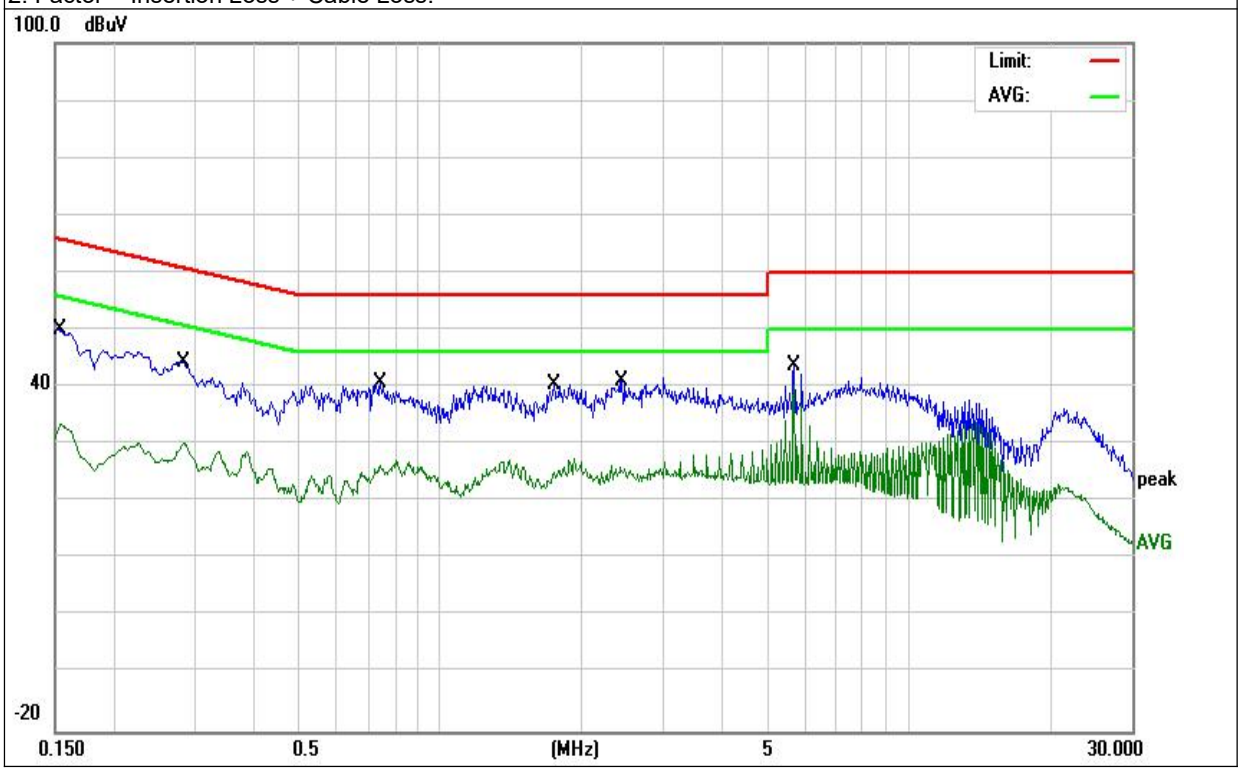

RADIATED EMISSION MEASUREMENT

LIMITS OF RADIATED EMISSION MEASUREMENT

The emissions from an intentional radiator shall not exceed the field strength levels specified in the following table 15.209(a):

Frequency (MHz)	Field strength (microvolts/meter)	Measurement distance (meters)
0.009-0.490	2400/F(kHz)	300
0.490-1.705	24000/F(kHz)	30
1.705-30.0	30	30
30-88	100**	3
88-216	150**	3
216-960	200**	3
Above 960	500	3

15.205 Restricted bands of operation

MHz	MHz	MHz	GHz
0.090-0.110	16.42-16.423	399.9-410	4.5-5.15
[1]0.495-0.505	16.69475-16.69525	608-614	5.35-5.46
2.1735-2.1905	16.80425-16.80475	960-1240	7.25-7.75
4.125-4.128	25.5-25.67	1300-1427	8.025-8.5
4.17725-4.17775	37.5-38.25	1435-1626.5	9.0-9.2
4.20725-4.20775	73-74.6	1645.5-1646.5	9.3-9.5
6.215-6.218	74.8-75.2	1660-1710	10.6-12.7
6.26775-6.26825	108-121.94	1718.8-1722.2	13.25-13.4
6.31175-6.31225	123-138	2200-2300	14.47-14.5
8.291-8.294	149.9-150.05	2310-2390	15.35-16.2
8.362-8.366	156.52475-156.52525	2483.5-2500	17.7-21.4
8.37625-8.38675	156.7-156.9	2690-2900	22.01-23.12
8.41425-8.41475	162.0125-167.17	3260-3267	23.6-24.0
12.29-12.293	167.72-173.2	3332-3339	31.2-31.8
12.51975-12.52025	240-285	3345.8-3358	36.43-36.5
12.57675-12.57725	322-335.4	3600-4400	(2)
13.36-13.41			

Notes:

(1) Measurement was performed at an antenna to the closed point of EUT distance of meters.

(2) Emission level (dBuV/m)=20log Emission level (uV/m).

(3) Only spurious frequency is permitted to locate within the Restricted Bands specified in provision of 15.205, and the emissions located in restricted bands also comply with 15.209 limit.

(4) The emission limits shown in the above table are based on measurements employing a CISPR quasi-peak detector except for the frequency bands 9-90 kHz, 110-490 kHz and above 1000 MHz. Radiated emission limits in these three bands are based on measurements employing an average detector

TEST PROCEDURE

Test Arrangement for Radiated Emissions up to 1 GHz

a. The EUT was placed on the top of a rotating table 0.8 meters above the ground at an accredited test facility. The table was rotated 360 degrees to determine the position of the highest radiation.
b. The EUT was set 3 meters away from the interference-receiving antenna, which was mounted on the top of a variable-height antenna tower.
c. The antenna is a broadband antenna(Blow 30M, use loop antenna), and its height is varied from one meter to four meters above the ground to determine the maximum value of the field strength. Both horizontal and vertical polarizations of the antenna are set to make the measurement.
d. For each suspected emission, the EUT was arranged to its worst case and then the antenna was tuned to heights from 1 meter to 4 meters and the rotatable table was turned from 0 degrees to 360 degrees to find the maximum reading.

Note: The resolution bandwidth and video bandwidth of test receiver/spectrum analyzer is 120kHz for quasi-peak detection (QP) at frequency below 1GHz.

Test Arrangement for Radiated Emissions above 1 GHz.

a. The EUT was placed on the top of a rotating table 0.8 meters above the ground at an accredited chamber room. The table was rotated 360 degrees to determine the position of the highest radiation.
b. The EUT was set 3 meters away from the interference-receiving antenna, which was mounted on the top of a variable-height antenna tower.
c. The height of antenna can be varied from one meter to four meters, the height of adjustment depends on the EUT height and the antenna 3dB beamwidth both, to detect the maximum value of the field strength. Both horizontal and vertical polarizations of the antenna are set to make the measurement.
d. For each suspected emission, the EUT was arranged to its worst case and then the antenna was tuned to heights and the rotatable table was turned from 0 degrees to 360 degrees to find the maximum reading.

During the radiated emission test, the Spectrum Analyzer was set with the following configurations:

Use the following receiver/spectrum analyzer settings:
Span = wide enough to fully capture the emission being measured
RBW=200Hz for 9KHz to 150KHz,
RBW=9kHz for 150KHz to 30MHz,
RBW=120KHz for 30MHz to 1GHz
VBW ⩾ 3*RBW
Sweep = auto
Detector function = QP
Trace = max hold

TEST SETUP

(a) For Radiated Emission Test Set-Up, Frequency Below 30MHz

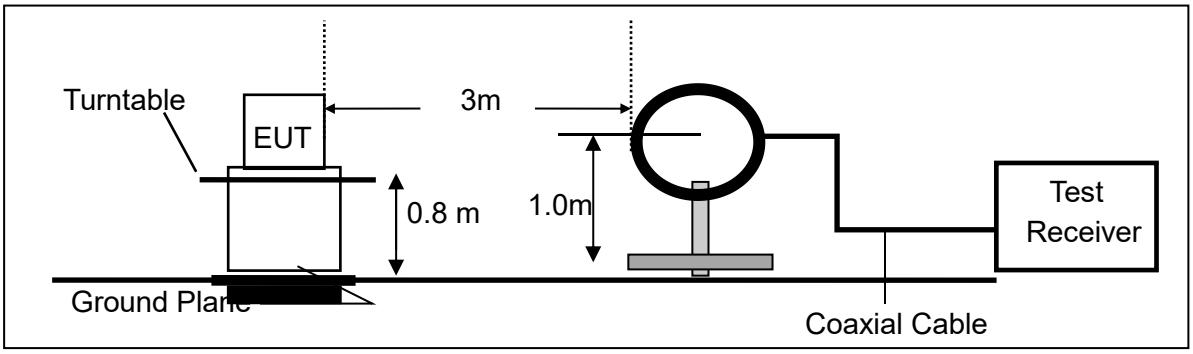

(b) For Radiated Emission 30~1000MHz

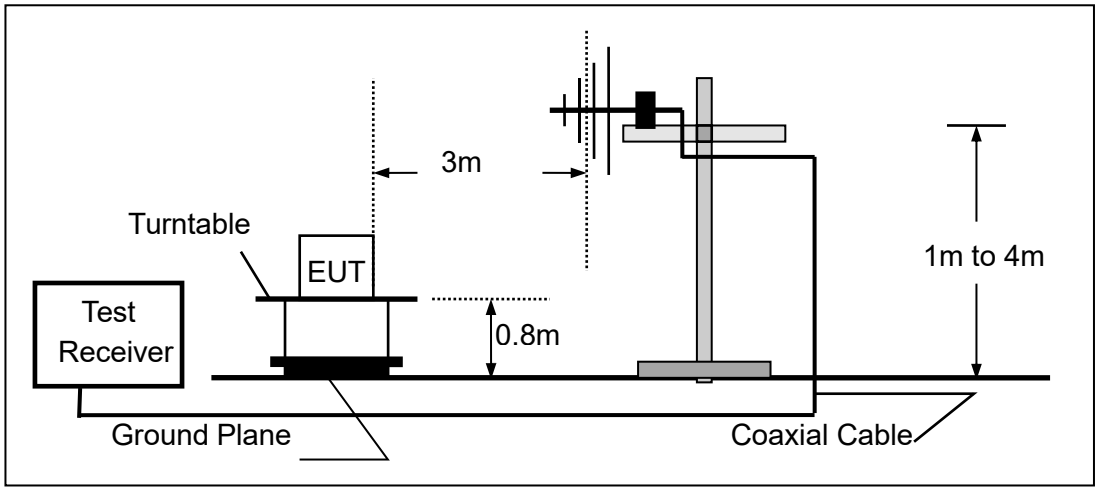

TEST RESULTS

TEST RESULTS (9KHz~30MHz)

All the modulation modes have been tested, and the worst result was report as below:

EUT:	Easy One Touch 4 Wireless	Model Name. :	HLCRIO134
Temperature:	24 ℃	Relative Humidity:	54%
Pressure:	1010 hPa	Test Power :	DC 12V
Test Mode :	Low frequency/Max Load	Polarization :	X

Frequency (MHz)	Ant.Pol.	Emission Level (dBuV/m)	Limits (dBuV/m)	Margin (dB)	Remark
0.058	X	44.59	112.3	-67.7	Avg
0.111	X	65.59	106.7	-41.1	Avg(fundamental frequency)
0.626	X	45.24	71.67	-26.43	QP
2.826	X	37.56	69.54	-31.98	QP
4.957	X	43.05	69.54	-26.49	QP
19.278	X	35.26	69.54	-34.28	QP

Note:

Below 30MHz, Pre-test the X, Y, Z axis to find X axis is worst case, so only record X axis test data.

X: Field strength which this device generates since the position of the charging coil and loop antenna differ by 0 degrees.

Y: Field strength which this device generates since the position of the charging coil and loop antenna differ by 90 degrees.

Z: Field strength which this device generates since the position of the charging coil and loop antenna differ by 180 degrees.

EUT:	Easy One Touch 4 Wireless	Model Name. :	HLCRIO134
Temperature:	24 ℃	Relative Humidity:	54%
Pressure:	1010 hPa	Test Power :	DC 12V
Test Mode :	Mid frequency/Max Load	Polarization :	X

Frequency (MHz)	Ant.Pol.	Emission Level (dBuV/m)	Limits (dBuV/m)	Margin (dB)	Remark
0.051	X	41.36	113.45	-72.09	Avg
0.155	X	69.98	103.80	-33.82	Avg(fundamental frequency)
0.565	X	38.52	72.56	-34.04	QP
0.850	X	34.89	69.02	-34.13	QP
1.526	X	33.56	63.93	-30.37	QP
7.183	X	48.21	69.54	-21.33	QP

Note:

Below 30MHz, Pre-test the X, Y, Z axis to find X axis is worst case, so only record X axis test data.

X: Field strength which this device generates since the position of the charging coil and loop antenna differ by 0 degrees.

Y: Field strength which this device generates since the position of the charging coil and loop antenna differ by 90 degrees.

Z: Field strength which this device generates since the position of the charging coil and loop antenna differ by 180 degrees.

EUT:	Easy One Touch 4 Wireless	Model Name. :	HLCRIO134
Temperature:	24 ℃	Relative Humidity:	54%
Pressure:	1010 hPa	Test Power :	DC 12V
Test Mode :	High frequency/Max Load	Polarization :	X

Frequency (MHz)	Ant.Pol.	Emission Level (dBuV/m)	Limits (dBuV/m)	Margin (dB)	Remark
0.056	X	37.95	112.64	-74.69	Avg
0.175	X	68.92	102.74	-33.82	Avg(fundamental frequency)
0.496	X	40.35	73.69	-33.34	QP
1.489	X	36.08	64.15	-28.07	QP
5.456	X	35.68	69.54	-33.86	QP
7.959	X	33.49	69.54	-36.05	QP

Note:

Below 30MHz, Pre-test the X, Y, Z axis to find X axis is worst case, so only record X axis test data.

X: Field strength which this device generates since the position of the charging coil and loop antenna differ by 0 degrees.

Y: Field strength which this device generates since the position of the charging coil and loop antenna differ by 90 degrees.

Z: Field strength which this device generates since the position of the charging coil and loop antenna differ by 180 degrees.

TEST RESULTS (30MHz ~1000MHz)

All the modulation modes have been tested, and the worst result was report as below:

EUT:	Easy One Touch 4 Wireless	Model Name. :	HLCRIO134
Temperature:	24 ℃	Relative Humidity:	54%
Pressure:	1010 hPa	Test Power :	DC 12V
Test Mode :	High frequency/Max Load	Polarization :	Horizontal

Polar (H/V)	Frequency (MHz)	Meter Reading (dBuV)	Factor (dB)	Emission Level (dBuV/m)	Limits (dBuV/m)	Margin (dB)	Remark
H	97.1148	20.28	10.38	30.66	43.50	-12.84	QP
H	119.8556	19.34	12.43	31.77	43.50	-11.73	QP
H	160.9089	25.09	10.75	35.84	43.50	-7.66	QP
H	271.3246	21.38	14.34	35.72	46.00	-10.28	QP
H	729.3582	7.73	25.10	32.83	46.00	-13.17	QP
H	948.7609	6.75	28.35	35.10	46.00	-10.90	QP

Remark:
Factor = Antenna Factor + Cable Loss - Amplifier.

EUT:	Easy One Touch 4 Wireless	Model Name. :	HLCRIO134
Temperature:	24 ℃	Relative Humidity:	54%
Pressure:	1010 hPa	Test Power :	DC 12V
Test Mode :	High frequency/Max Load	Polarization :	Vertical

Polar (H/V)	Frequency (MHz)	Meter Reading (dBuV)	Factor (dB)	Emission Level (dBuV/m)	Limits (dBuV/m)	Margin (dB)	Remark
V	33.5624	11.08	17.42	28.50	40.00	-11.50	QP
V	48.8429	16.65	10.13	26.78	40.00	-13.22	QP
V	103.0800	22.78	11.08	33.86	43.50	-9.64	QP
V	117.7725	22.52	12.43	34.95	43.50	-8.55	QP
V	162.0414	24.49	10.72	35.21	43.50	-8.29	QP
V	287.9904	15.38	14.32	29.70	46.00	-16.30	QP

Remark:
Factor = Antenna Factor + Cable Loss - Amplifier.

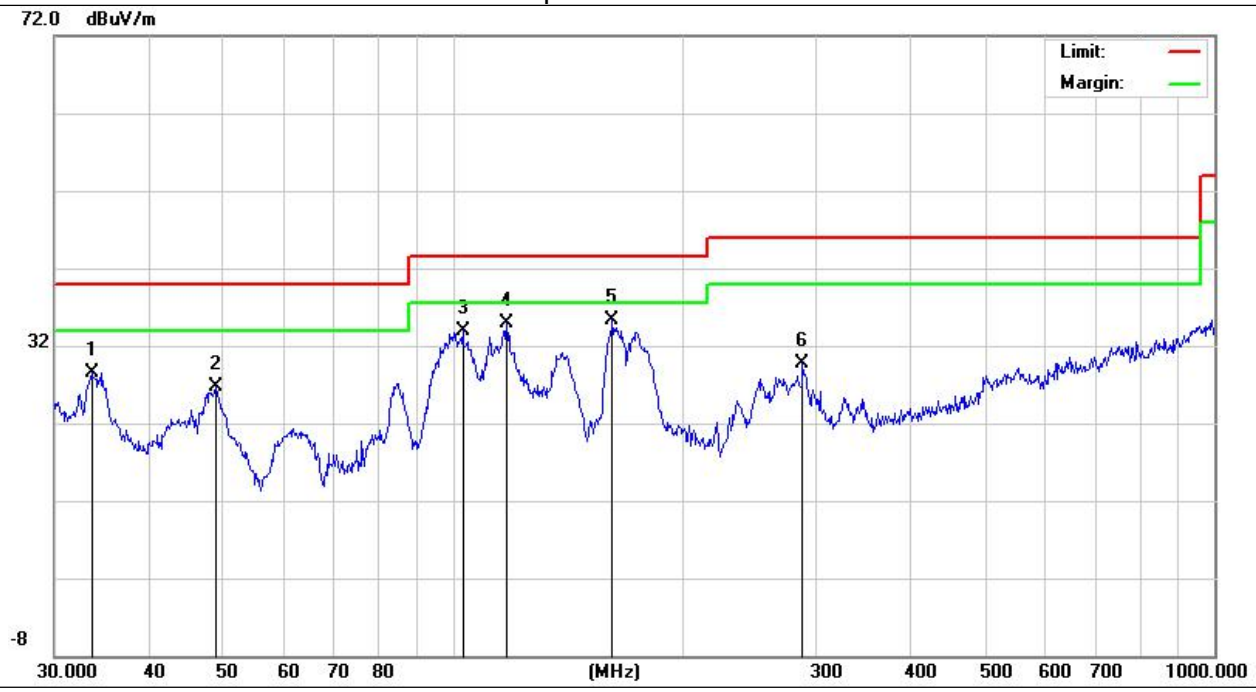

4. BANDWIDTH TEST

4.1 TEST PROCEDURE

1). The transmitter output (antenna port) was connected to the spectrum analyzer in peak mode.
2). 20dB Bandwidth the resolution bandwidth of 1 kHz and the video bandwidth of 1 kHz were used.
3). Measured the spectrum width with power higher than 20dB below carrier.

4.2 TEST SETUP

4.3 TEST RESULT

All the modulation modes have been tested, and the worst result was report as below:

EUT:	Easy One Touch 4 Wireless	Model Name. :	HLCRIO134
Temperature:	24 ℃	Relative Humidity:	54%
Pressure:	1010 hPa	Test Mode :	Operating maxload
Test Power :	DC 12V		

99% Bandwidth- a single frequency (Hz)	F_L (kHz)	F_H (kHz)	Note:F_L＞110kHz,F_H＜495kHz, compliance with the Restricted bands requirements according to Part 15.205
694.654	110.26	175.789	

a single frequency

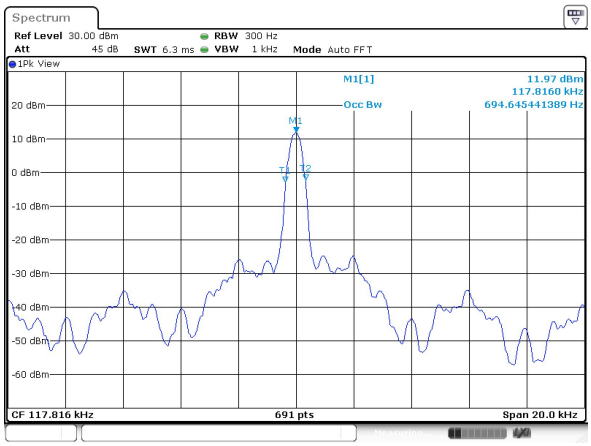

a multi - frequency

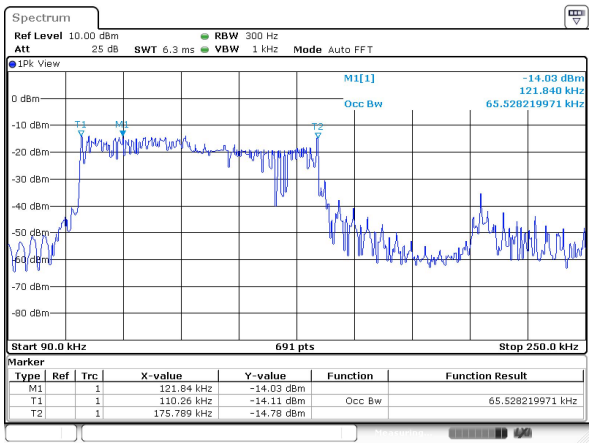

5. ANTENNA APPLICATION

5.1 Antenna Requirement

15.203 requirement: For intentional device, according to 15.203: an intentional radiator shall be designed to ensure that no antenna other than that furnished by the responsible partyshall be used with the device.

5.2 Result

The EUT antenna is permanent attached antenna. It comply with the standard requirement.

END REPORT