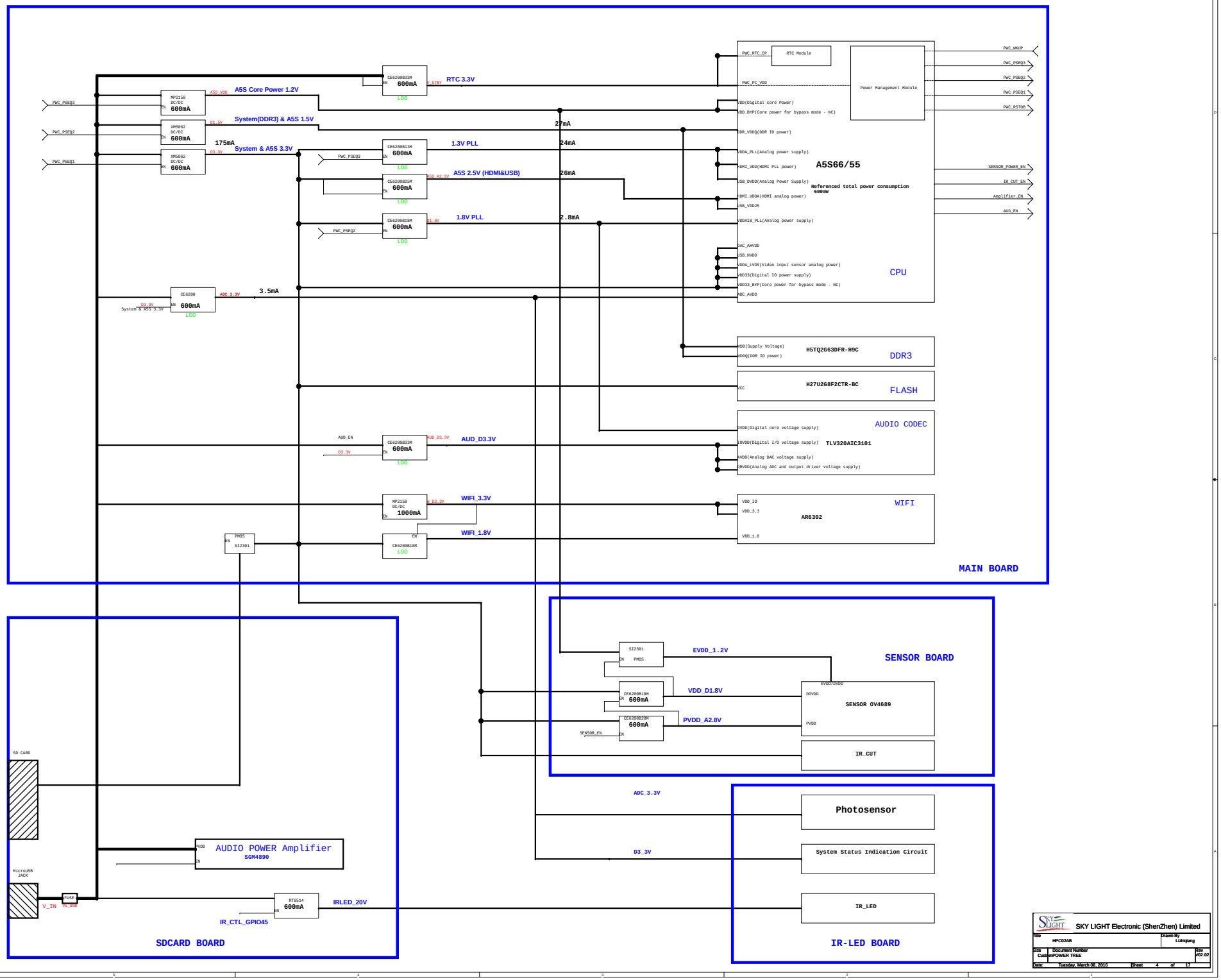

SKY LIGHT Electronic (ShenZhen) Limited

Title	HPC02AB	Drawn By	Lizhiqiang
Size Custom	Document Number POWER TREE		Rev V02.02
Date:	Tuesday, March 08, 2016	Sheet 4 of 17	

A5S Power-On-Config Setting

A5S Power-On-Config (VD0_OUT0~15)
==========
VD0_OUT0
Boot Media Select
0: NAND flash
1: Reserved
==========
VD0_OUT[3:1]
Clock: iDSP / vDSP / DRAM
000: 126 / 108 / 300 MHz
001: 120 / 96 / 300 MHz
010: 108 / 108 / 240 MHz
011: 96 / 96 / 192 MHz
100: 117 / 108 / 300 MHz
101: 117 / 96 / 300 MHz
110: 117 / 108 / 240 MHz
111: 96 / 96 / 192 MHz
==========
VD0_OUT4
PLL_UNLOCK_TRIG_RESET
0: disable generating GRST when core PLL out of lock (default)
1: enable generating GRST when core PLL out of lock
==========
VD0_OUT5
NAND Flash Page Size
0: 512 Bytes
1: 2K Bytes
==========
VD0_OUT6
NAND Read Confirm
0: No "Read Confirm" needed
1: Requirs "Read Confirm"
==========
VD0_OUT7
Select ENET
0: disable
1: enable
==========
VD0_OUT8
Boot Bypass
0: disable (no boot bypass)
1: enable
==========
VD0_OUT9
Flash Fast Boot Mode
0: disable
1: enable
==========
VD0_OUT10
IO Flash BOOT
0: USB
1: Flash
==========
VD0_OUT11
Reserved
Set to 0
==========
VD0_OUT12
EMA Select
Set to 0
==========
VD0_OUT13
ARM Sync Lock Mode
0: disable
1: enable
==========
VD0_OUT14
ARM Mode Change Issue Reset
0: GRST_L not issued when switching between ARM sync/async modes
1: GRST_L issued when switching between ARM sync/async modes
==========
VD0_OUT15
RMII Select
Set to 0
==========

A5S Power-On-Config (VD1_OUT0~15)
==========
VD1_OUT0
SPI Boot
0: USB / Flash
1: SPI
==========
VD1_OUT1
HIF Enable
0: disable
1: enable host interface
==========
VD0_OUT2
Reserved
Set to 0
==========
VD1_OUT3
HIF Type
0: Intel
1: Motorola
==========
VD1_OUT4
RDY Polarity
0: HIF_RDY active low
1: HIF_RDY active high
==========
VD1_OUT5
HIF Secure Mode
0: normal
1: secure mode
==========
VD1_OUT6
Reserved
Set to 0
==========
VD1_OUT7
USB Clock Source Select
0: choose internal clock for USBPHY
1: choose external clock for USBPHY
==========
VD1_OUT[9:8]
Reserved
Set to 0
==========
VD1_OUT[10]
REF_CLK for USB
Set to 1
==========
VD1_OUT[11]
Reserved
Set to 0
==========
VD1_OUT[12]
Reserved
Set to 0
==========
VD1_OUT[14:13]
SYS_CONFIG
00: use power-on-config set on external pins
01: select pre-set option 1
10: select pre-set option 2
11: illegal
==========
VD1_OUT[15]
Config Source Select
0: depends on that configured by VD1_OUT[14:13]
1: on-chip EEPROM (Efuse)
==========

Note:
all GPIO pins(89 Pins) are in Hi-Z state during reset assertion and are initialized to be inputs.

System GPIO Table

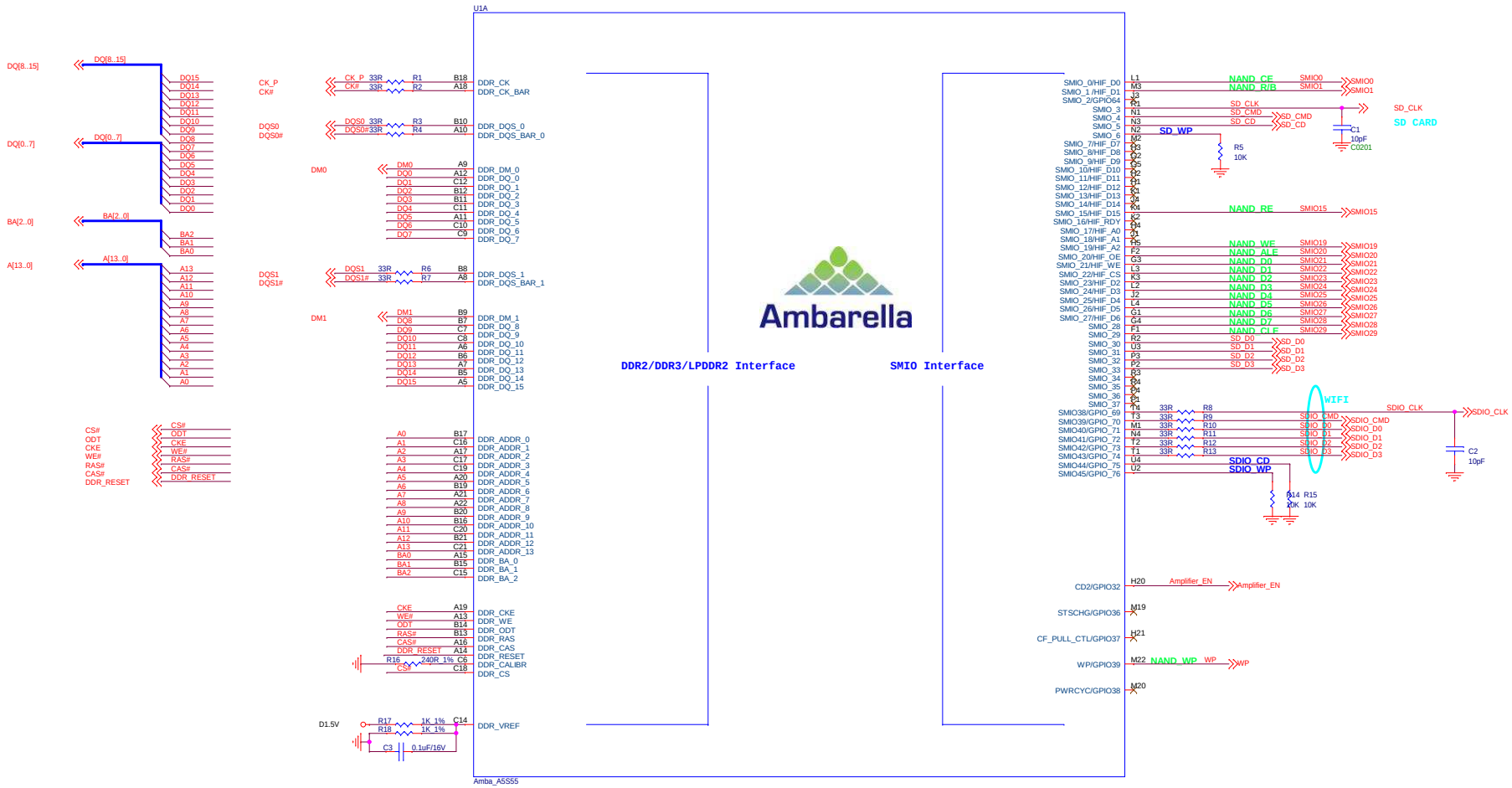

SKY LIGHT Electronic (ShenZhen) Limited

Title	HPC02AB	Drawn By	Lizhiqiang
Size C	Document Number A5S Part1 -- DDR AND SDIO		Rev V02.02
Date: Tuesday, March 08, 2016	Sheet 6 of 17		

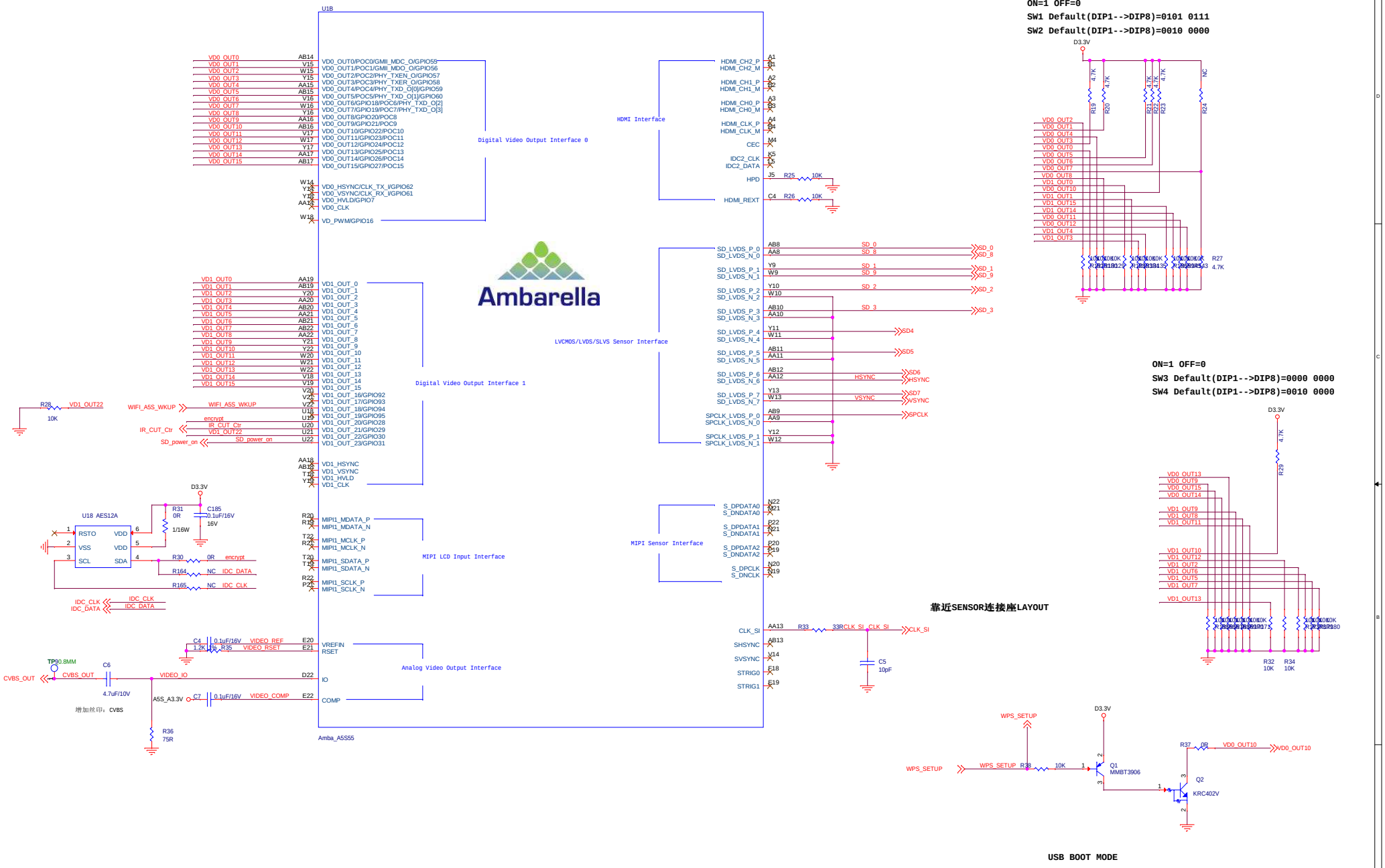

ON=1 OFF=0
SW1 Default(DIP1-->DIP8)=0101 0111
SW2 Default(DIP1-->DIP8)=0010 0000

ON=1 OFF=0
SW3 Default(DIP1-->DIP8)=0000 0000
SW4 Default(DIP1-->DIP8)=0010 0000

靠近SENSOR连接座LAYOUT

USB BOOT MODE

Power-On Boot Mode：
NAND
(2048-B block)
(Read confirm)

SKY LIGHT Electronic (ShenZhen) Limited

Title	HPC02AB	Drawn By	Lizhiqiang
Size C	Document Number A5S Part2 – VIN/VOUT		Rev V02.02
Date: Tuesday, March 08, 2016	Sheet 7 of 17		

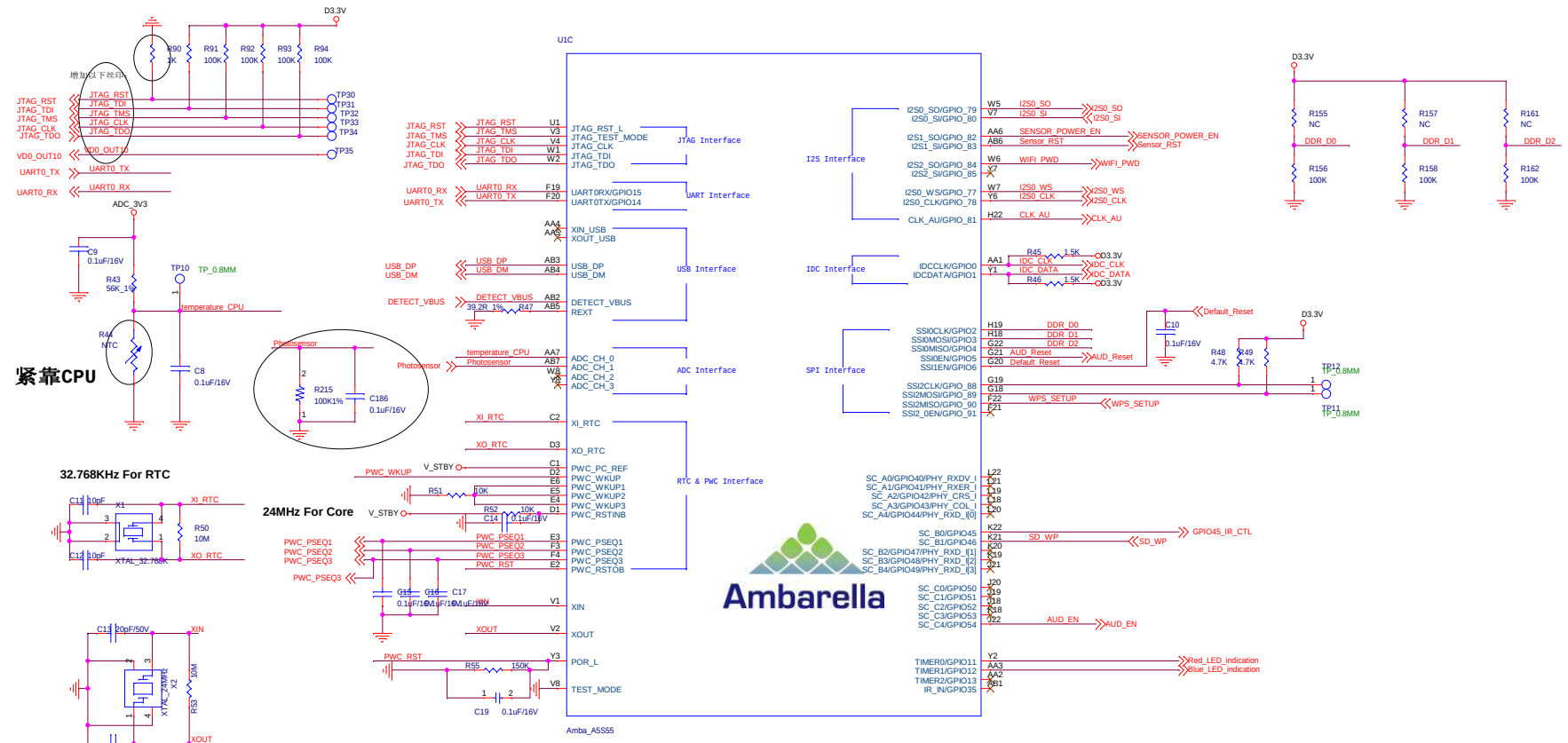

SKY LIGHT Electronic (ShenZhen) Limited		
Title: HPC02AB		Drawn By: Lizhiqiang
Size: C	Document Number: A5S Part3 -- IOs	Rev: V02.02
Date: Tuesday, March 08, 2016	Sheet 8 of 17	

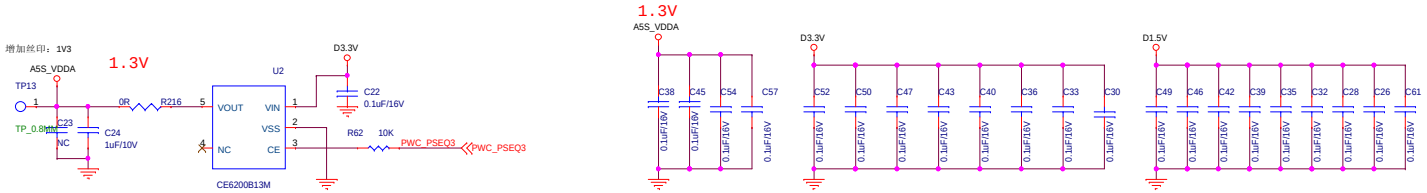

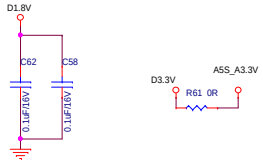

Parameter	Comments	Minimum	Typical	Maximum	Ripple
ADC_AVDD		3.0 V	3.3 V	3.46 V	2%
DAC_AHVDD		3.0 V	3.3 V	3.46 V	2%
DDR_VDDQ	DDR2 Mode	1.7 V	1.8 V	1.9 V	2%
	DDR3 Mode	1.43 V	1.5 V	1.57 V	2%
	LPDDR2 Mode	1.14 V	1.2 V	1.3 V	2%
	LPDDR Mode	1.7 V	1.8 V	1.9 V	2%
HDMI_VDD		1.25 V	1.3 V	1.35 V	2%
HDMI_VDDA		2.375 V	2.5 V	2.625 V	2%
M_VDD11_PLL		VDDA_PLL	VDDA_PLL	VDDA_PLL	2%
MS_VDD18		1.7 V	1.8 V	1.9 V	2%
USB_DVDD		1.15 V	1.2 V	1.25 V	2%
USB_HVDD		3.0 V	3.3 V	3.46 V	2%
USB_VDD25		2.375 V	2.5 V	2.625 V	2%
VDD		1.15 V	1.2 V	1.25 V	2%
VDD33		2.8 V	3.3 V	3.5 V	2%
VDD_BYP		VDD	VDD	VDD	2%
VDD33_BYP		VDD33	VDD33	VDD33	2%
VDDA_LVDS	LVDS Mode	2.375 V	2.5 V	2.625 V	2%
	1.8-V LVCMOS	1.7 V	1.8 V	1.9 V	2%
	2.5-V LVCMOS	2.375 V	2.5 V	2.625 V	2%
	2.8-V LVCMOS	2.7 V	2.8 V	2.9 V	2%
	3.3-V LVCMOS	2.8 V	3.3 V	3.5 V	2%
VDDA_PLL		1.25 V	1.3 V	1.35 V	2%
VDDA18_PLL (VDDA25_PLL ball map)		1.7 V	1.8 V	1.9 V	2%

SKYLIGHT Confidential

A5S Decoupling Capacitors & LC Filter

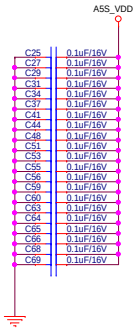

Default is D3.3V for LVCMOS

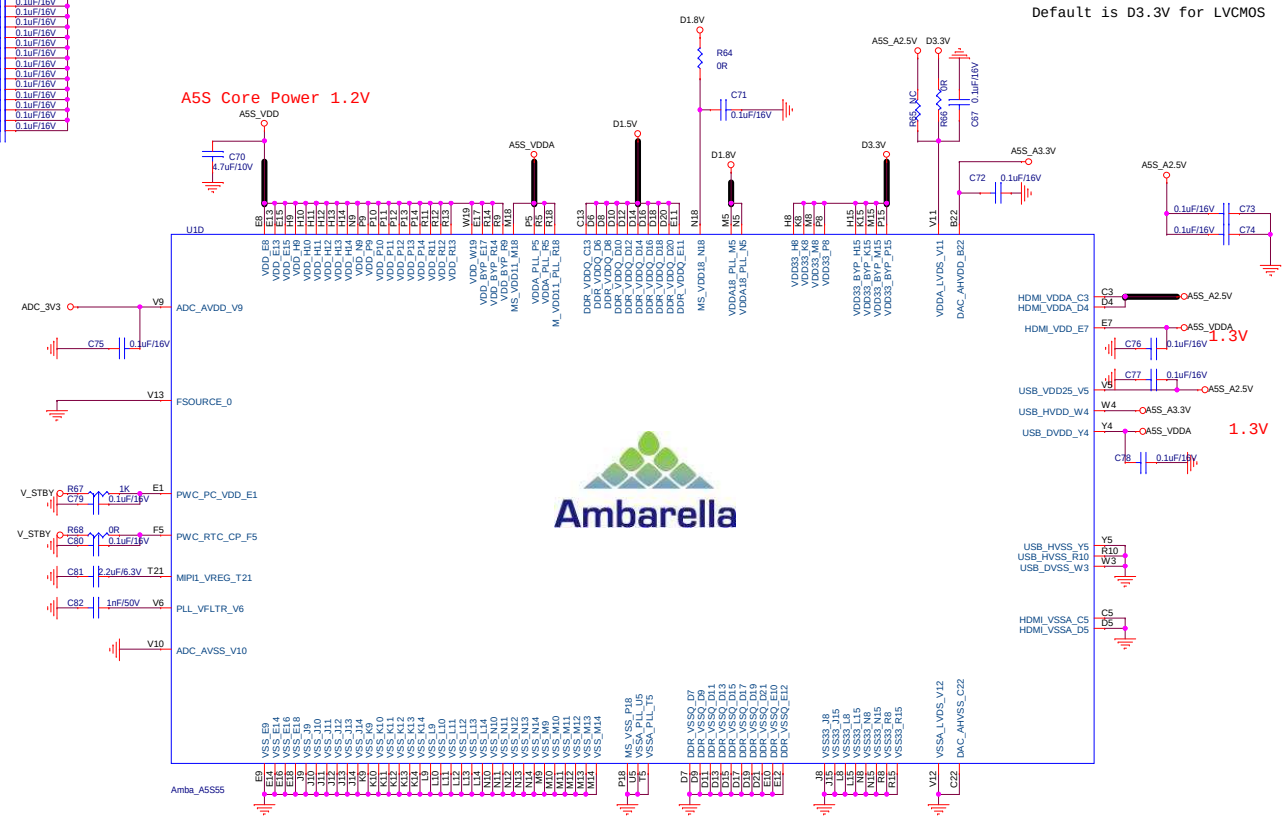

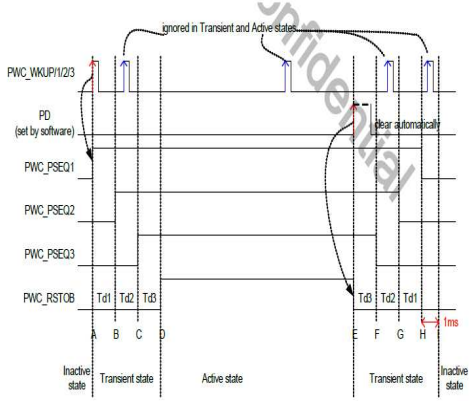

Power On/Off Sequence

SKY LIGHT Electronic (ShenZhen) Limited

Title	HPC02AB	Drawn By	Lizhiqiang
Size C	Document Number A5S Part4 -- POWER		Rev v02.02
Date: Tuesday, March 08, 2016	Sheet 9 of 17		

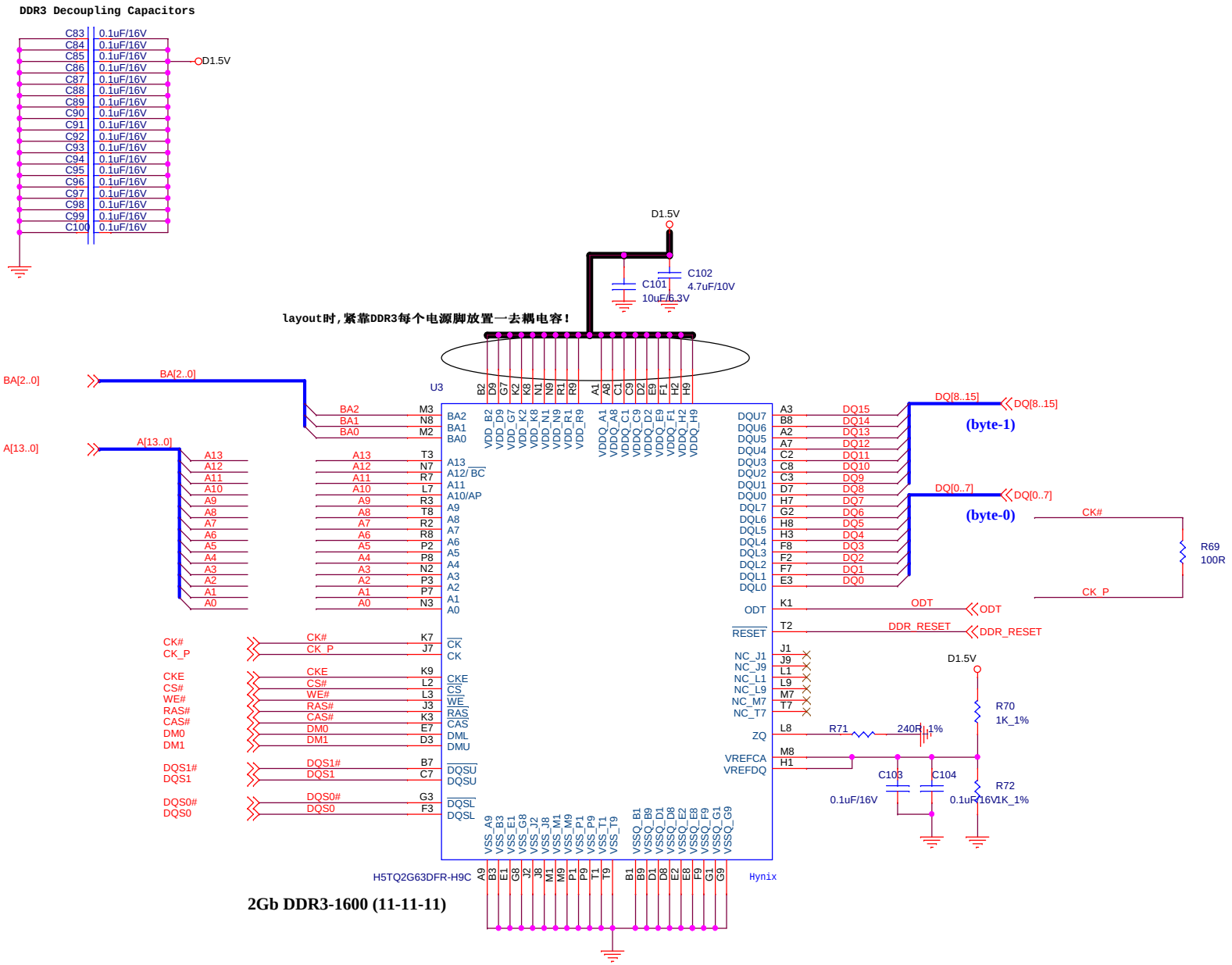

SKY LIGHT Electronic (ShenZhen) Limited

Title: HPC02AB		Drawn By: Lizhiqiang
Size: B	Document Number: DDRIII-128Mx16	Rev: V02.02
Date: Tuesday, March 08, 2016	Sheet 10 of 17	

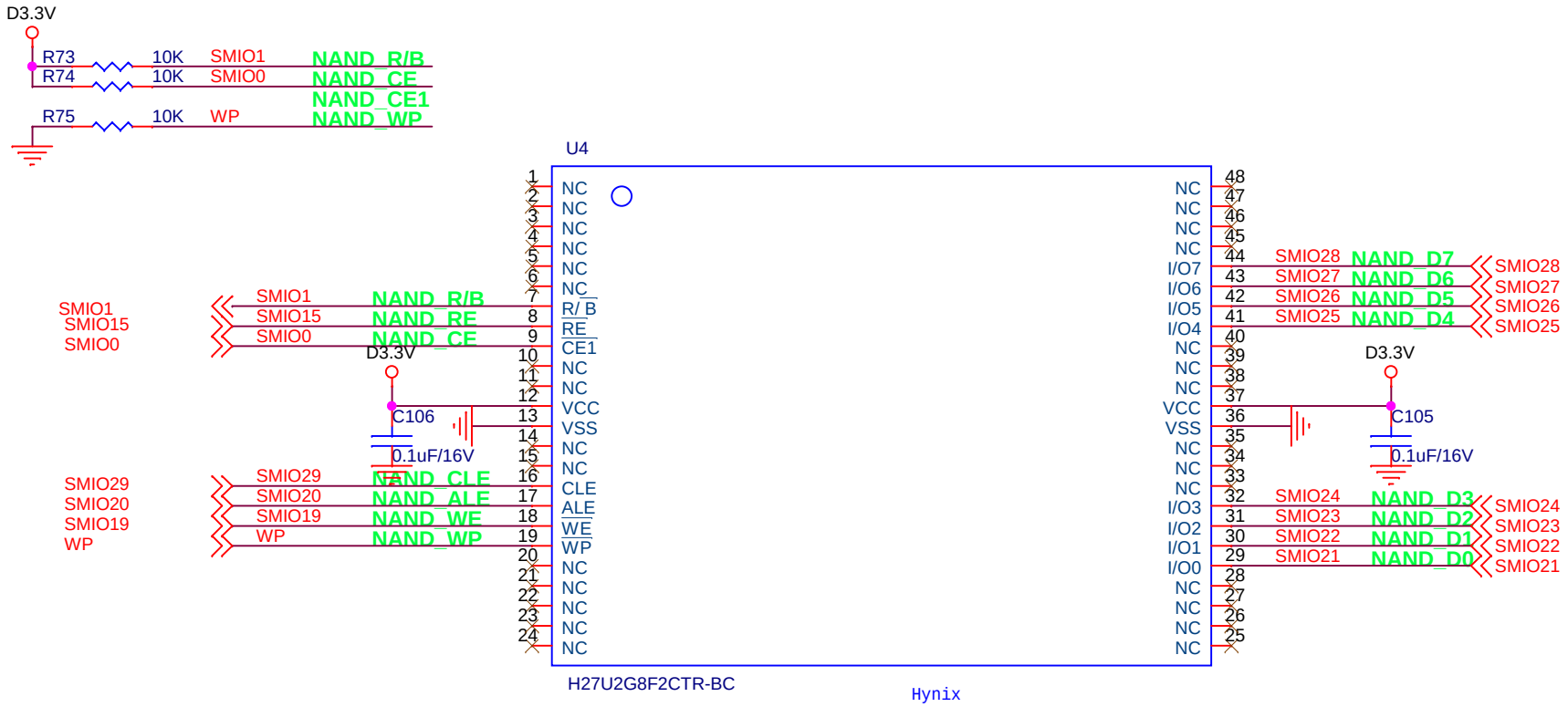

SKY LIGHT Electronic (ShenZhen) Limited

Title: HPC02AB		Drawn By: Lizhiqiang
Size: A	Document Number: FLASH-256Mx8	Rev: V02.02
Date: Tuesday, March 08, 2016	Sheet 11 of 17	

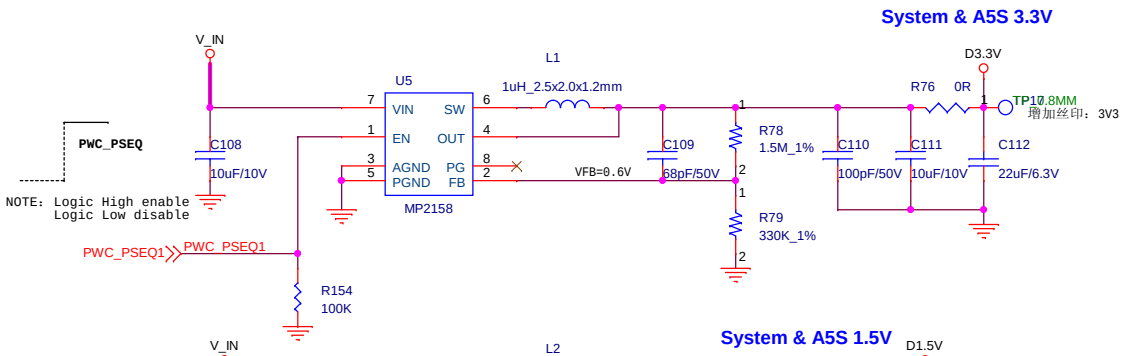

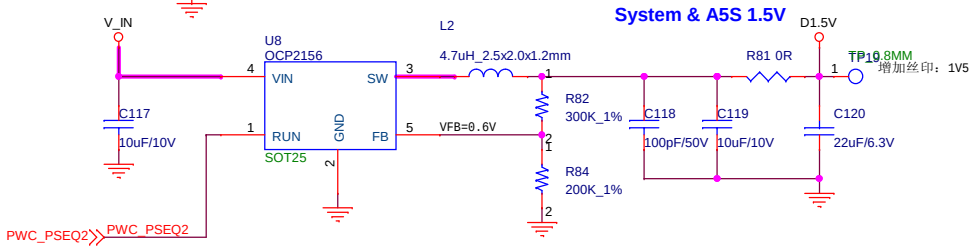

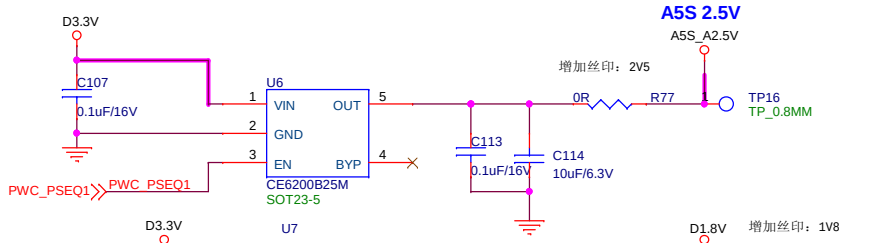

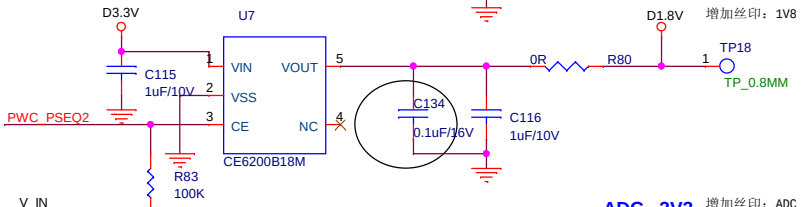

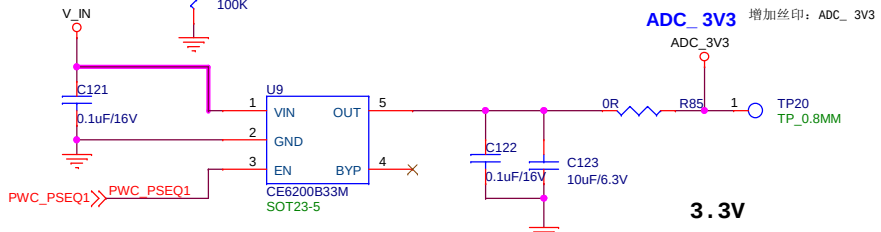

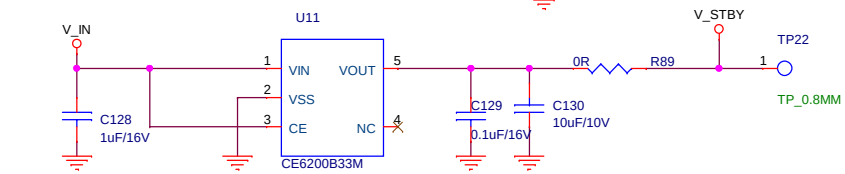

RTC Power Circuit

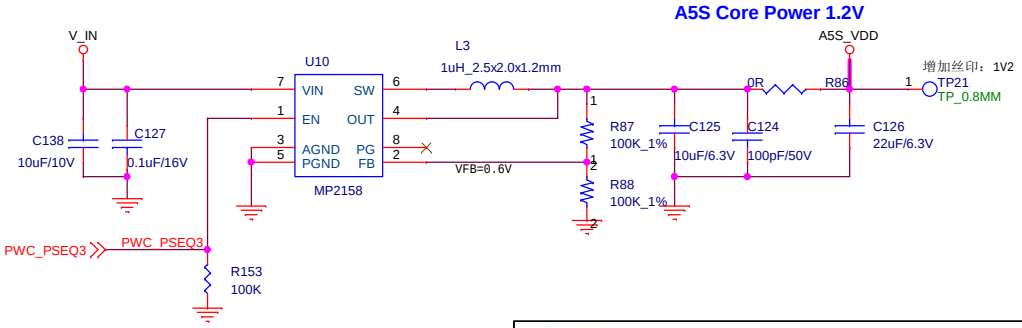

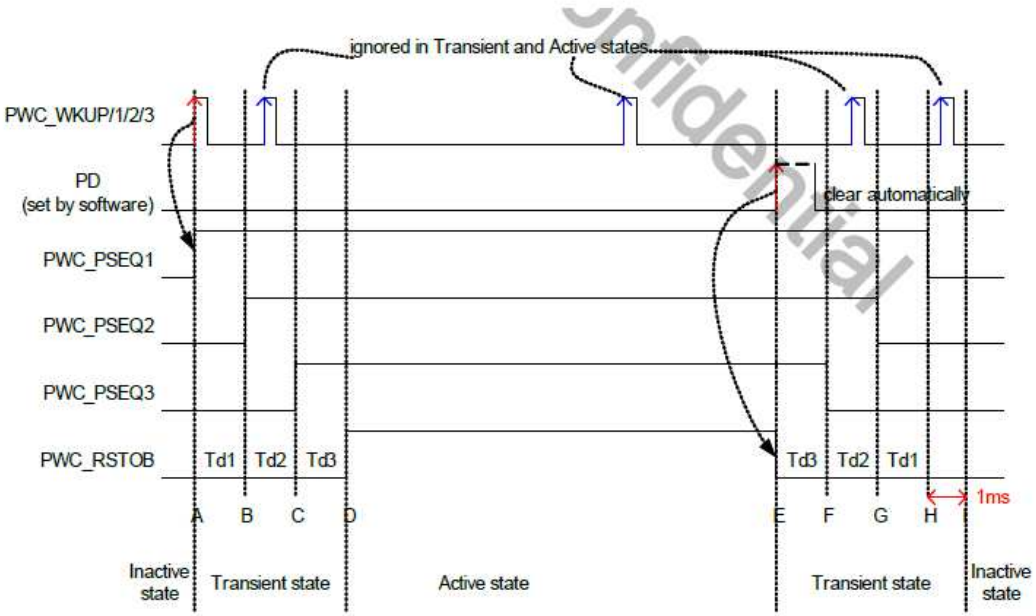

Power On/Off Sequence

Confidential

SKY LIGHT Electronic (ShenZhen) Limited			
Title: HPC02AB		Drawn By: Lizhiqiang	
Size: B	Document Number: Power manager		Rev: V02.02
Date: Tuesday, March 08, 2016	Sheet 12 of 17		

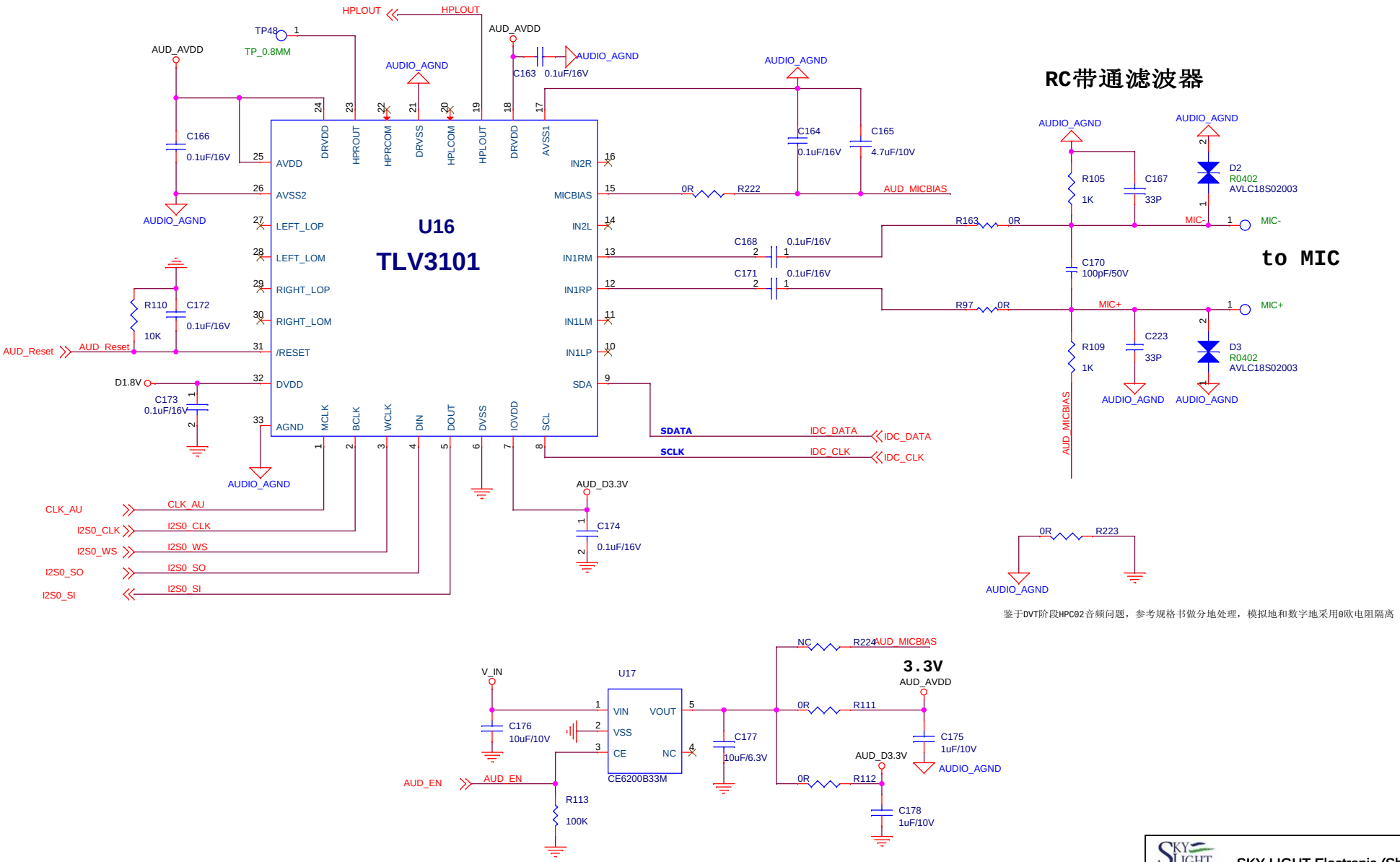

SKY LIGHT Electronic (ShenZhen) Limited

Title: HPC02AB		Drawn By: Lizhiqiang
Size: B	Document Number: Audio Codec	Rev: V02.02
Date: Tuesday, March 08, 2016	Sheet 13 of 17	

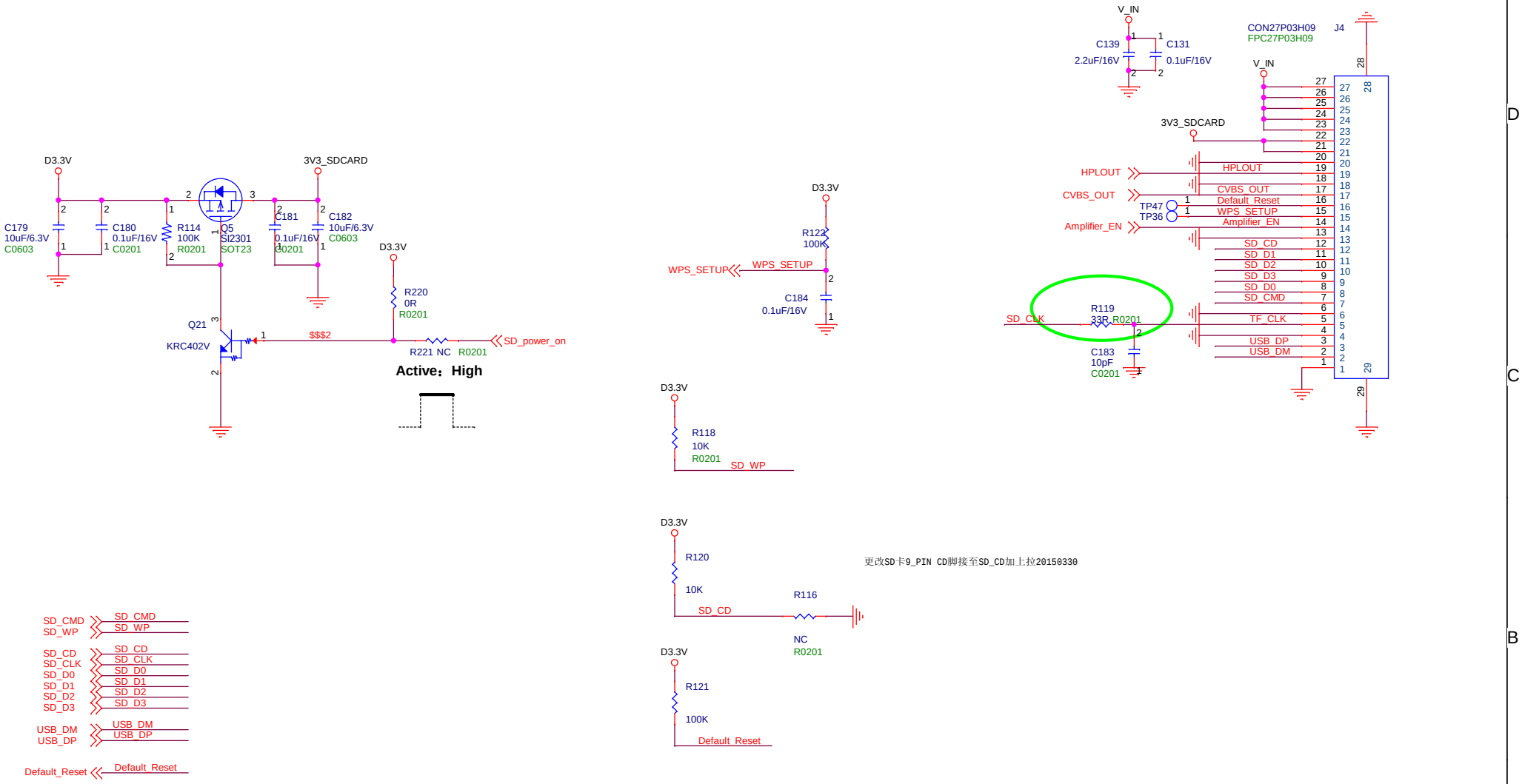

SKY LIGHT Electronic (ShenZhen) Limited

Title: HPC02AB		Drawn By: wangguanming
Size: B	Document Number: TF Card-Connector	Rev: V02.03
Date: Monday, March 14, 2016	Sheet 14 of 17	

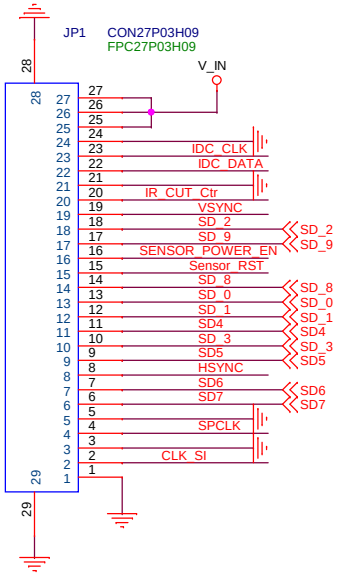

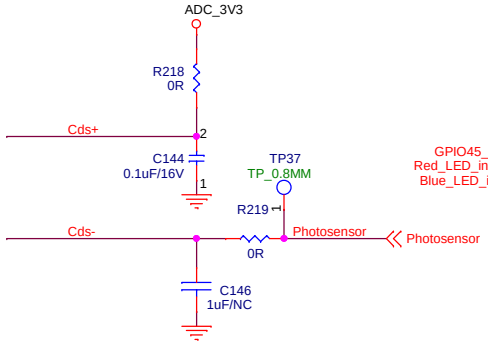

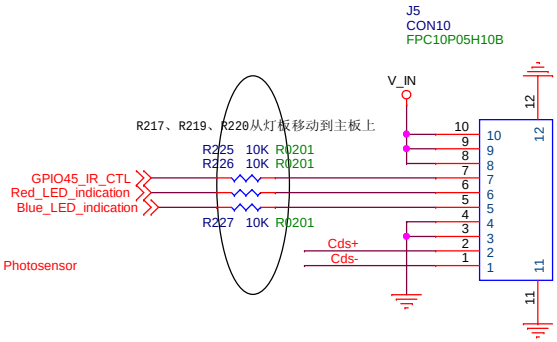

To IRLED Board

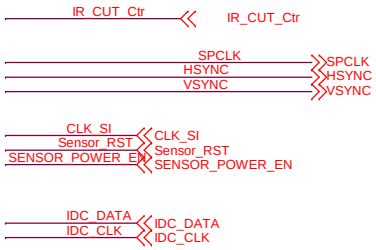

To Sensor Board（FPC座子）

FPC座 27Pin PH0.3

Sensor型号为：OV9712

Sky Light Electronic (Shen Zhen) Limited			
Title: HPC02AB		Drawn By: wangguanming	
Size: B	Document Number: Sensor-OV9712		Rev: V02.02
Date: Tuesday, March 08, 2016	Sheet 15 of 17		

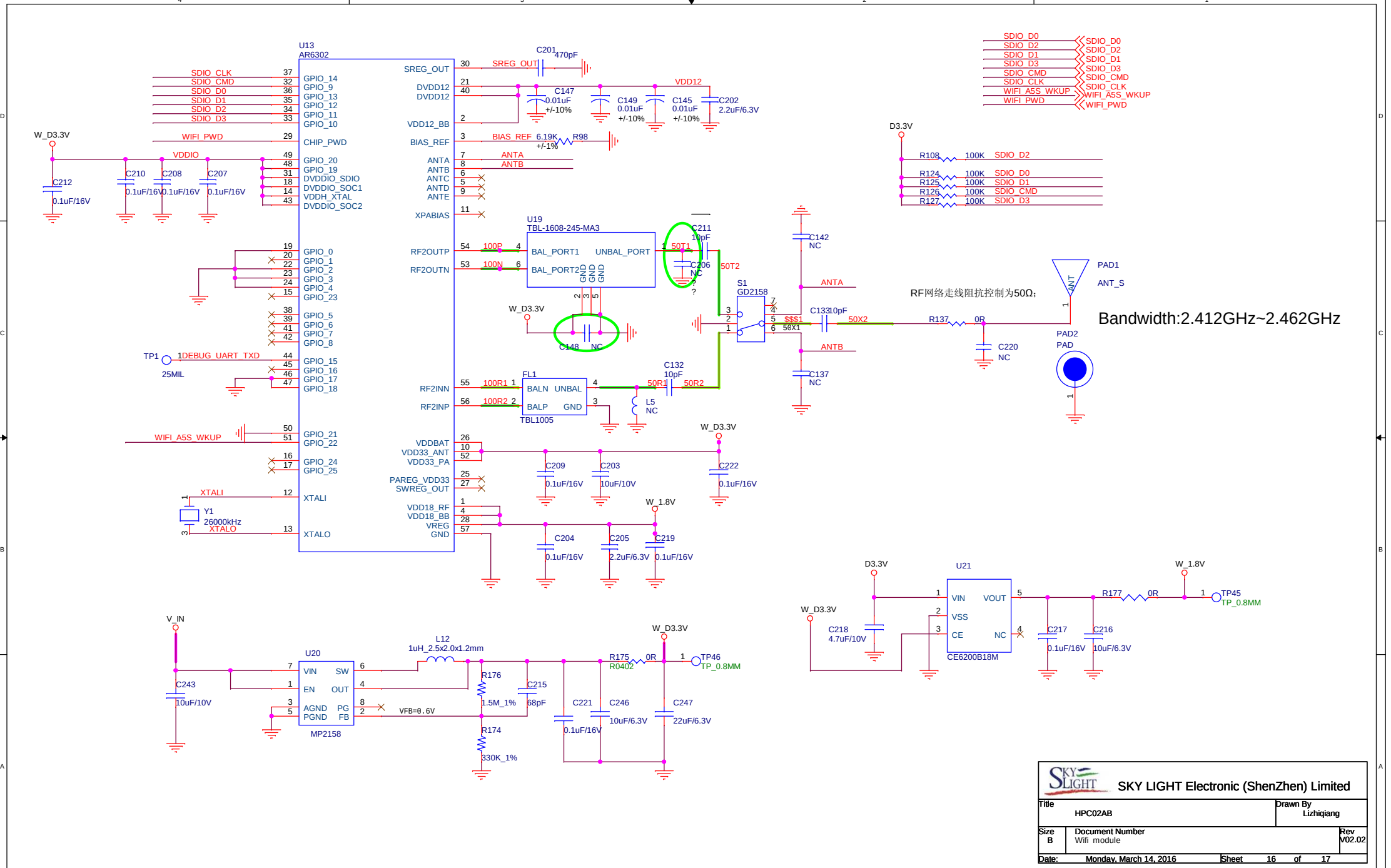

SKY LIGHT Electronic (ShenZhen) Limited

Title: HPC02AB		Drawn By: Lizhiqiang
Size: B	Document Number: Wifi module	Rev: V02.02
Date: Monday, March 14, 2016	Sheet 16 of 17	

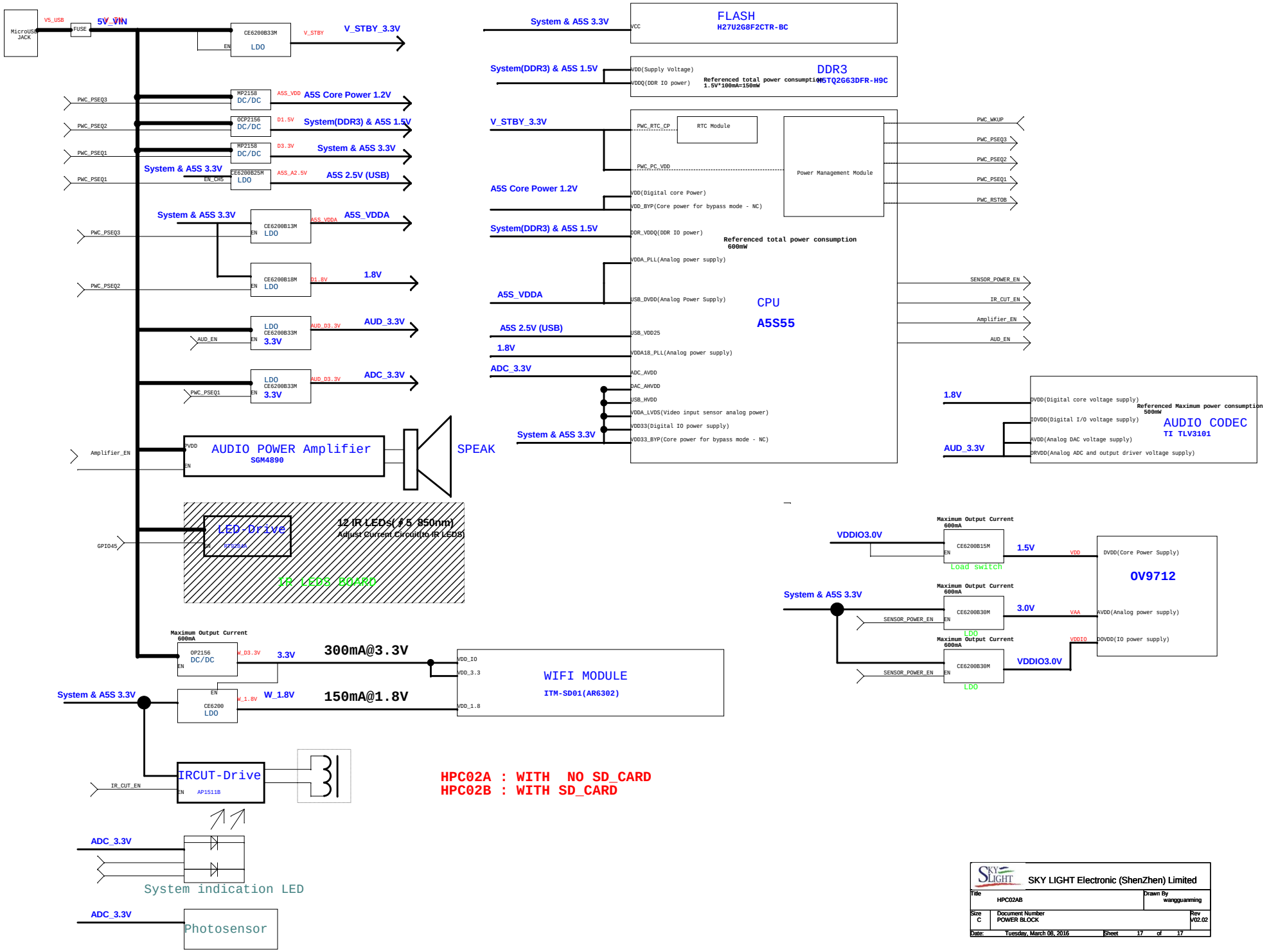

HPC02A : WITH NO SD_CARD
HPC02B : WITH SD_CARD

SKY LIGHT Electronic (ShenZhen) Limited			
Title: HPC02AB		Drawn By: wangguanming	
Size: C	Document Number: POWER BLOCK		Rev: V02.02
Date: Tuesday, March 08, 2016	Sheet 17 of 17		