Metra
inženiring d.o.o.

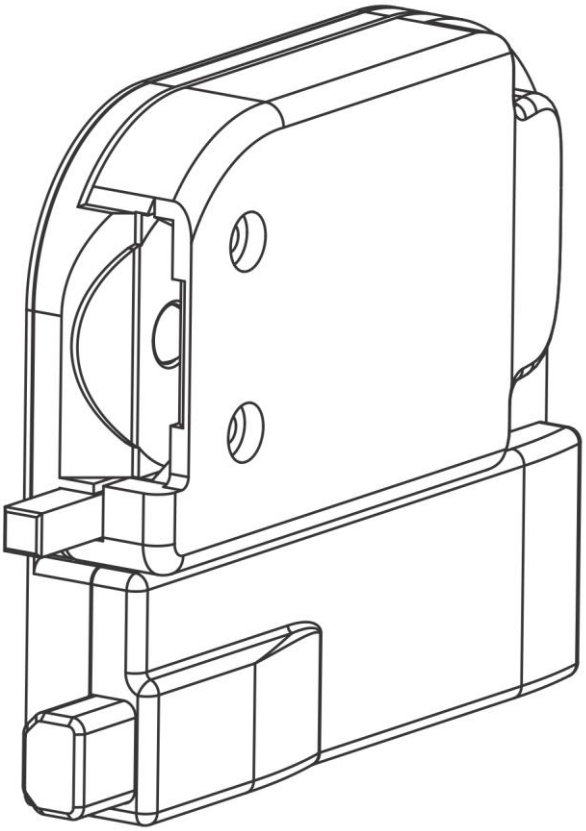

Electronic Lock RFID ISO MT *Technical Manual*

Table of contents

Electronic Lock RFID ISO MT *Technical Manual* 3
Final product labelling 4
Product description 4
Components 5
Lock position 5
Wiring 5
Link 2 connection plates 6
Link 4 connection plates 7
Link 8 connection plates 8
Crimping the connectors 9
Six-pole flat cable connectors 9
Three-pole EasyWire cable connectors 11
Adjusting the ejector spring force 13
Mounting the lock 14
Procedure 16
Mounting the strike 17
Final operational test of the locker 19
Electronic Lock set-up 20
RFID reader test 21
Maintenance of the lock 22

Electronic Lock RFID ISO MT *Technical Manual*

Manufacturer:	Metra inženiring d.o.o. IOC Trzin Špruha 19 SI-1236 Trzin, Slovenia	phone: fax: web:	+386 1 56 10 740 +386 1 56 10 744 www.metra.si

Trade Mark:	Metra MEW System
Model/Type ref.:	Electronic Lock RFID ISO MT
Part Number:	1143
FCC ID:	2ABT80003P1143
Year of Construction:	2015

This product is in conformity with the essential requirements and other relevant requirements of the following EU Directives:

- Radio and Telecommunications Terminal Equipment (R&TTE) Directive 2014/53/EU
- RoHS Recast (RoHS2) Directive 2011/65/EU of the European Parliament and of the Council on the restriction of the use of certain hazardous substances in electrical and electronics equipment.
- Low Voltage Directive (LVD) 2014/35/EU that ensures that electrical equipment within certain voltage limits provides a high level of protection for European citizens.

Model/Type ref.: Electronic Lock RFID ISO MT
Part Number: 1143
FCC ID: 2ABT80003P1143

This device complies with part 15 of the FCC Rules. Operation is subject to the following two conditions: (1) This device may not cause harmful interference, and (2) this device must accept any interference received, including interference that may cause undesired operation.

This device has been tested and found to comply with the limits for a Class B digital device, pursuant to Part 15 of the FCC Rules. These limits are designed to provide reasonable protection against harmful interference in a residential installation. This equipment generates uses and can radiate radio frequency energy and, if not installed and used in accordance with the instructions, may cause harmful interference to radio communications. However, there is no guarantee that interference will not occur in a particular installation. If this equipment does cause harmful interference to radio or television reception, which can be determined by turning the equipment off and on, the user is encouraged to try to correct the interference by one or more of the following measures:

- Reorient or relocate the receiving antenna.
- Increase the separation between the equipment and receiver.
- Connect the equipment into an outlet on a circuit different from that to which the receiver is connected.
- Consult the dealer or an experienced radio/TV technician for help.

Electronic Lock RFID ISO MT Technical Manual [rev.3-170316]
©2016 Metra inženiring d.o.o.
All Rights reserved.
No part of this manual may be reproduced in any form or by any means without prior written permission of Metra inženiring d.o.o.
The contents of this manual are subject to change without notice.
All efforts have been made to ensure the accuracy of the contents of this manual, however, should any errors be detected, Metra inženiring would greatly appreciate being informed of them. Metra inženiring d.o.o. can assume no responsibility for any errors in this manual.

• Final product labelling

FCC Label location is on the "Door RFID Antenna" because Electronic Lock RFID ISO MT is an OEM product for locker manufacturers and not for the final customer. At the time of delivery the label is clearly visible.

Locker manufacturers integrate this product (Electronic Lock RFID ISO MT) into a final product (locker) **and are responsible for proper labelling of the final product Therefore final** product's label must include also a statement "Contains FCC ID: 2ABT8003P1143".

• Product description

Metra Electronic Lock RFID ISO MT combines a standard proven Metra Electronic Lock with RFID Lock Driver and Metal Door RFID Antenna while MEW Controller is used to drive it.
Electronic lock is a reliable electro-motor driven lock. It is not a self-latch and electro unlatch model, but controls both, locking and unlocking. Electronically controlled locking means that there are no uncertain situations and that lock performs a self-test for unlocking on each cycle. Only hi-tech, non-corrosive, minimum maintenance parts are used. Patented ball-shape bolt and adjustable door strike ensure unlocking also under considerable pressure in any direction, thus compensating for shabby cabinets and hinge wear. RFID lock driver drives and monitors electronic lock connected to it while it is also a user interface. Build in ISO RFID media reader in combination with Metal Door RFID Antenna reads ISO 15693, ISO 1443A, ISO 14443 B and Mifare RFID media and it is suitable for metal door and non-metal door from thickness of 18 millimetres up to 30 millimetres.
Metal Door RFID Antenna boosts and focuses the RFID media reader's antenna field and can be installed into a plastic housing such as Metra Metal Door Strike or it is integrated directly into the door.
Electronic Lock is highly secure, with lock's holding force over 1000 N (depends also on cabinet structure) and designed to give an alarm signal even before* a break-in occurs (*depends also on the cabinet, usually when force exceeds 800 N) giving extra time to react. Alarm notification is triggered even if the strike has been pulled out from the door and remains in the lock. When unlocked the built-in ejector pushes the door to open.
Multiple Electronic Locks RFID are connected to the MEW Controller which supports emergency and security features: a pushbutton for emergency opening of all Electronic Locks RFID connected to it; in case of attempt of break-in an alarm message is distributed over Metra Network Controller to LAN / WAN and Metra software.

• Components

Electronic Lock RFID ISO MT

Base, strike and front cover

Connection plates

Cabling

• Lock position

The lock position has to be identified before the process of wiring. General recommendation is that the lock should be positioned near to the handle, so the users are operating the locks as directly as possible. Position may thus vary due to the locker construction, vertical position, etc. The screws are not supplied since they vary in size and type for different locker constructions and materials.

• Wiring

Electronic Lock RFID is connected to the connection plate which is part of a Metra EasyWire Network main line, by six-wire flat cable. For main line connection a three-wire cable is used. The lock, uncut wires, connectors and connection plates are supplied separately for adjustability to different situations (wire - lengths), easier process of wiring during installation and later maintenance. Different types of connection plates are available to suit different locker model. First identify the position of the locks and corresponding controller (up to 16 locks to one controller). Find the most suitable way for the wires from the controller to its locks and install the cables. Be sure to leave cable long enough to be connected to the lock before mounting it (approx. +5 cm).

Maximum length between MEW Controller and Electronic Lock RFID is 50 metres; 3 wire line and 6 wire lock connection cable combined while 6 wire connection cables should not be longer than 5 metres.

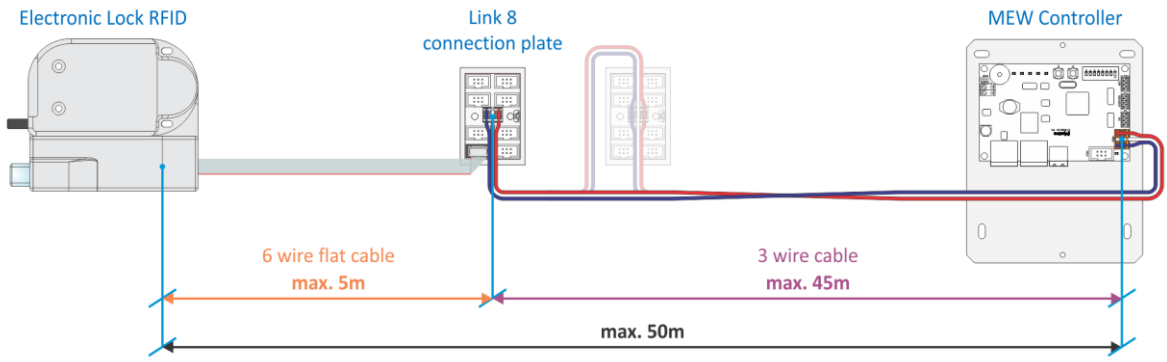

Contact Metra to help you find the best solution for wiring, Electronic Lock RFID and MEW Controller position, prefabricated wires and other mounting accessories and options.

• Link 2 connection plates

Wiring schematic example using “Link 2” connection plates. Link 2 connection plates are used where there full height lockers. Schematic bellow shows one sided bank of lockers with 2 lockers per locker block.

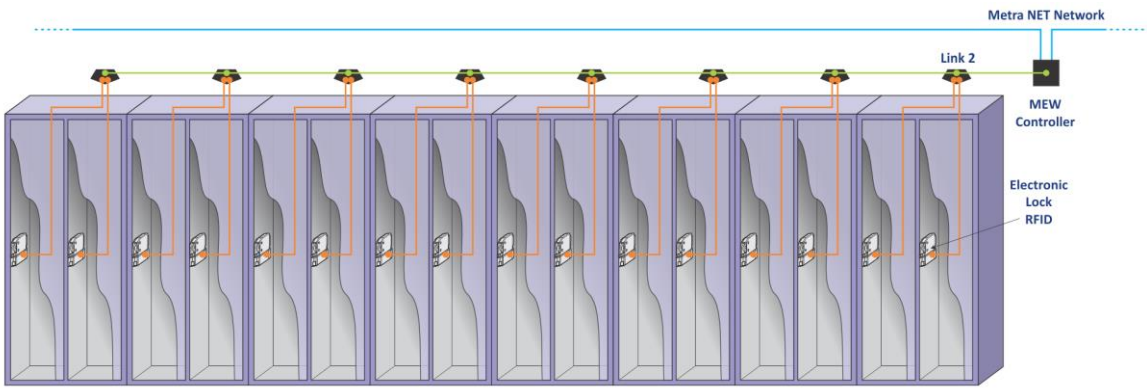

Using Link 2 connection plates Electronic Locks can be pre-connected. Connection with 6 pole flat cable from lock to connection plate can be made in factory and on site only EasyWire main line is connected with pre-fabricated 3 pole connection cables.

Although the lock has been designed for humid environments, it should not be exposed to the water flow such as condensation or direct cleaning gush. To avoid the condensation or other eventual water dripping into the lock via cable, foresee the drip-off loop of a cable before the connector.

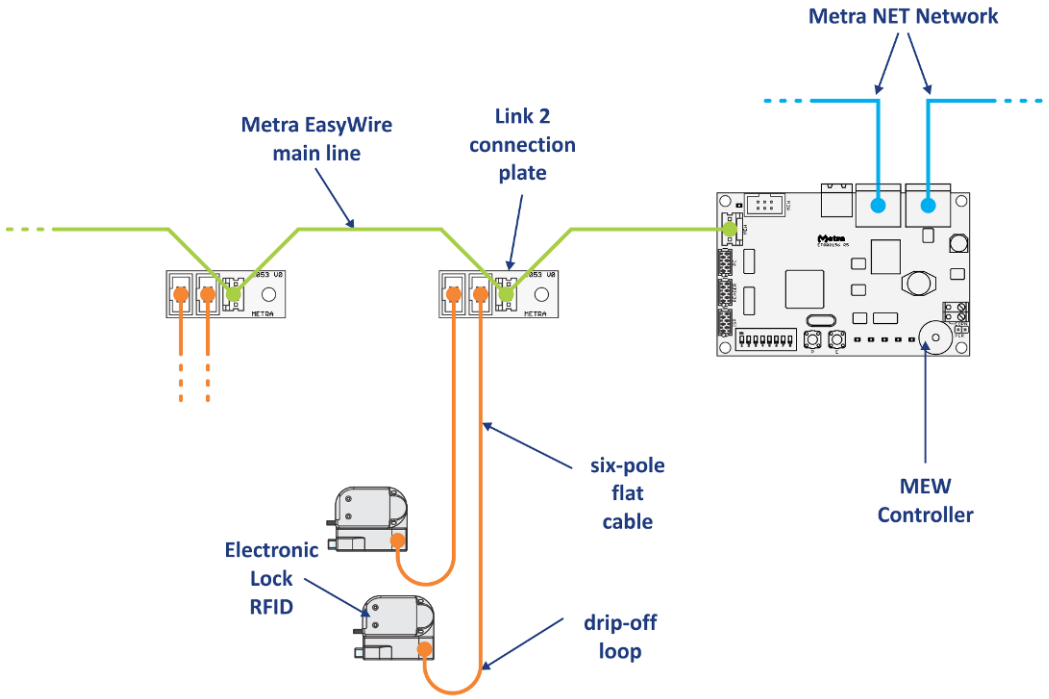

• Link 4 connection plates

Wiring schematic example using “Link 4” connection plates. Link 4 connection plates are used where there are single or double lockers in a column. Schematic bellow shows one sided bank of lockers with 4 lockers per locker block.

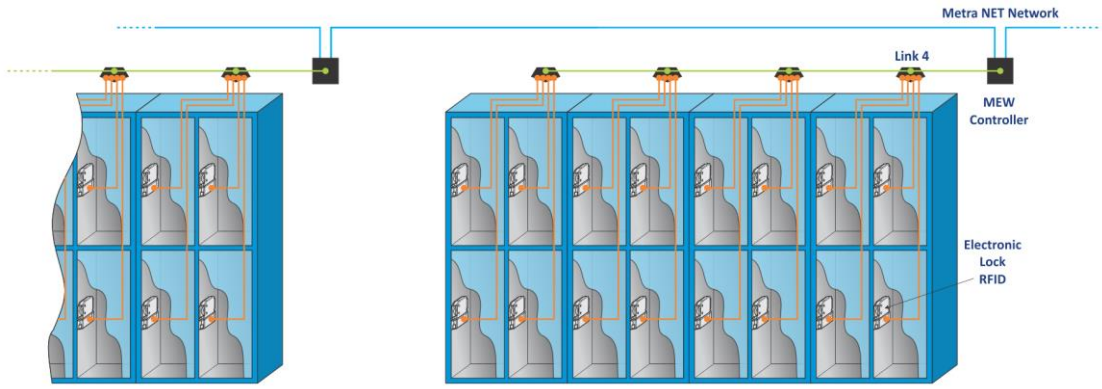

Using Link 4 connection plates Electronic Locks can be pre-connected. Connection with 6 pole flat cable from lock to connection plate can be made in factory and on site only EasyWire main line is connected with pre-fabricated 3 pole connection cables.

Although the lock has been designed for humid environments, it should not be exposed to the water flow such as condensation or direct cleaning gush. To avoid the condensation or other eventual water dripping into the lock via cable, foresee the drip-off loop of a cable before the connector.

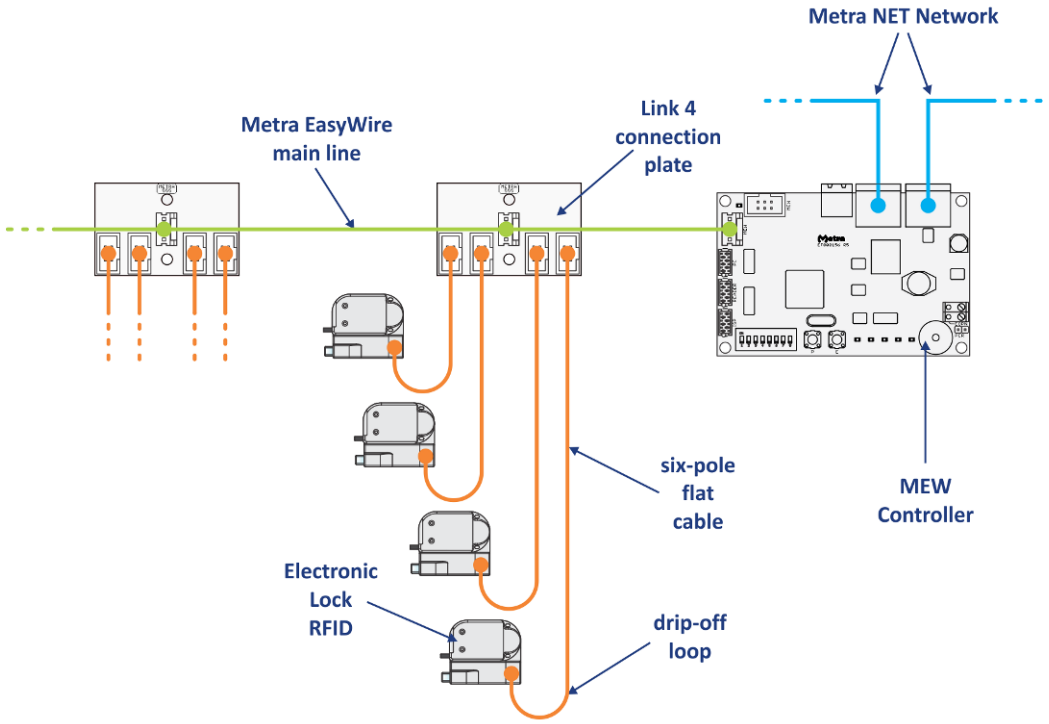

• Link 8 connection plates

Wiring schematic example using “Link 8” connection plates. Link 8 connection plates are used where there are multiple lockers in a column. Schematic bellow shows one sided bank of lockers with 16 lockers per locker block.

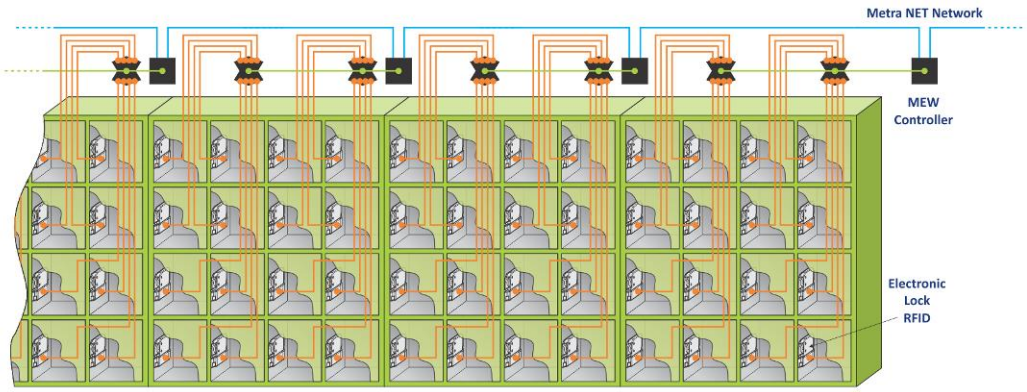

Using Link 8 connection plates Electronic Locks can be pre-connected. Connection with 6 pole flat cable from lock to connection plate can be made in factory and on site only EasyWire main line is connected with pre-fabricated 3 pole connection cables.

Although the lock has been designed for humid environments, it should not be exposed to the water flow such as condensation or direct cleaning gush. To avoid the condensation or other eventual water dripping into the lock via cable, foresee the drip-off loop of a cable before the connector.

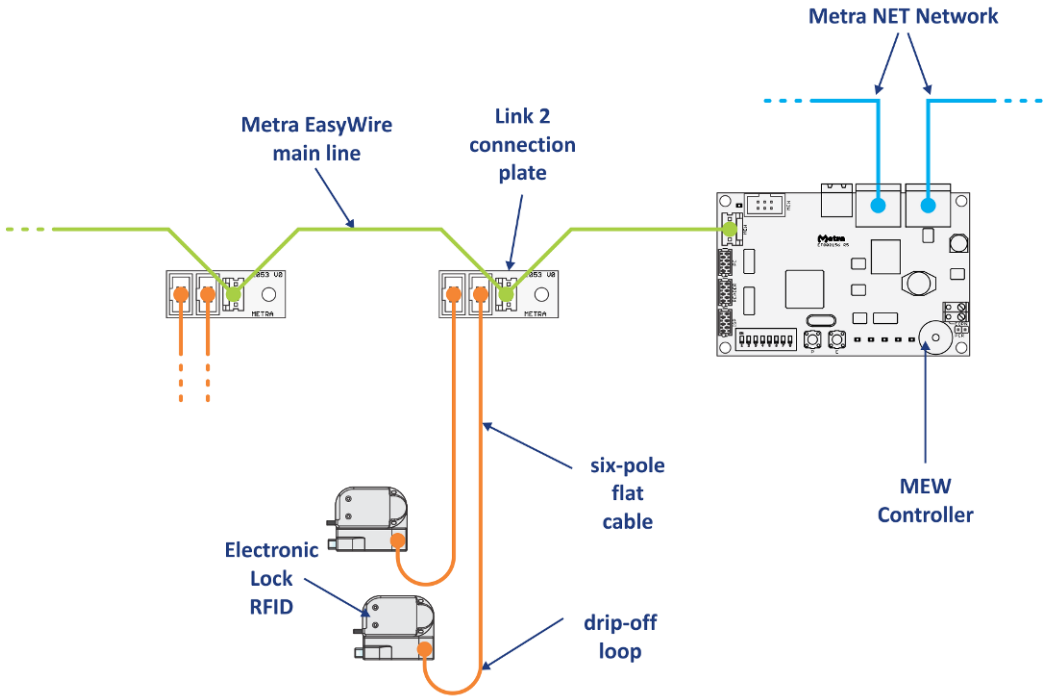

• Crimping the connectors

- Six-pole flat cable connectors

Tools required: To crimp the connectors you need crimpers for IDC connectors (left) or Metra special connector crimper with charger (bottom) (both can be purchased from Metra on request) and a sharp knife or OLFA cutter.

Connector Crimper with Charger →

STEP 1:
Find the PIN1 marker.

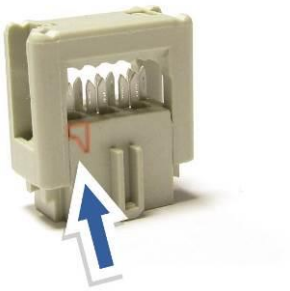

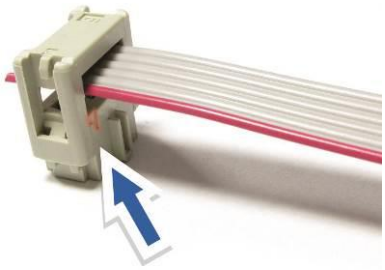

STEP 2:
Place the connector on the cable so that marker is on the red wire. There are two possible ways to do it, so mind also the orientation of the leading dent. To achieve a good quality contact on all wires, the connector should be perpendicular to the cable and the end of the cable should be overhanging the connector for a few mm.

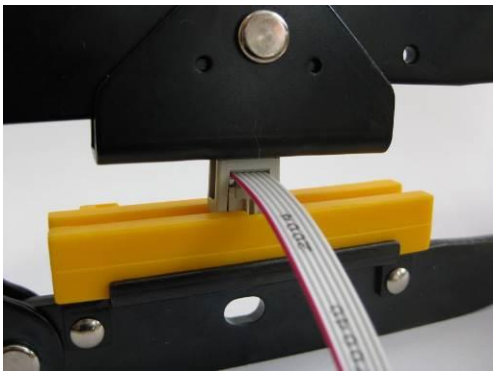

STEP 3:
Place connector into pliers and crimp the connector till it clicks.

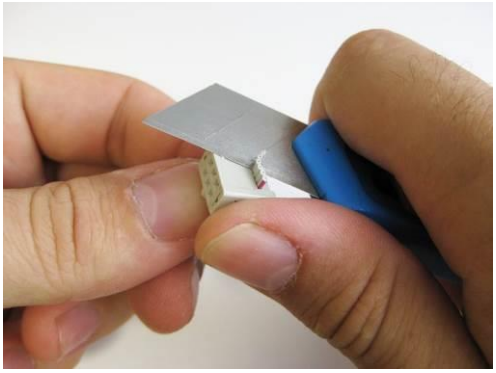

STEP 4:
Cut the overhanging part of the cable on the lock side with a sharp knife or an OLFA cutter, flat with connector side.

STEP 5:
Repeat the same procedure on the other side of the cable.

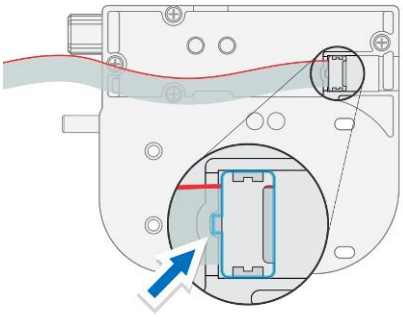

STEP 6:
Connect the Electronic Lock RFID.

☝ NOTE ☝
Pay attention to connector's orientation. Flat side of the connector should be orientated towards the back side of the lock.

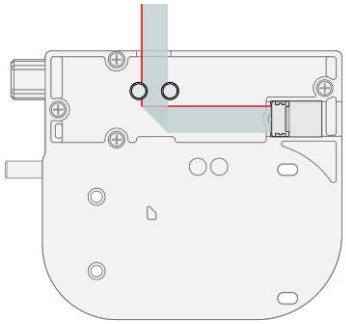

STEP 7 (OPTION A):
Placing the cable under the lock. Twist the 6-wire cable in the rabbet at the back side of the lock as shown on the picture (two options – depends of the cabling).

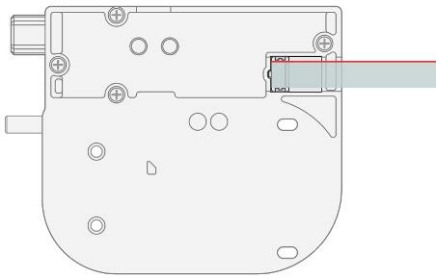

STEP 7 (OPTION B):
Placing the cable under the lock. Twist the 6-wire cable in the rabbet at the back side of the lock as shown on the picture (two options – depends of the cabling).

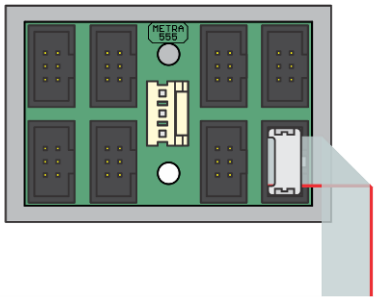

STEP 8:
Connect the other side of the cable to the connection plate.

NOTE: Example shows Link 8 connection plate.

- Three-pole EasyWire cable connectors

Tools required: To crimp the connectors you need special crimping pliers (can be purchased from Metra on request).

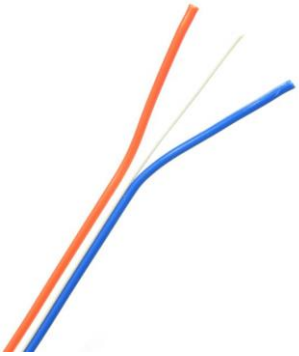

STEP 1:
Separate approximately 4 centimetres of wires on a 3 pole 0.75mm^2 cable.

STEP 2:
Place the connector in the pillars as shown on the photo.

NOTE:
Each pin on the connector is marked with a number from 1 to 3. Some connectors may have markings on the back side while some on the front side.

pin	wire colour
1	Blue wire
2	White wire
3	Red wire

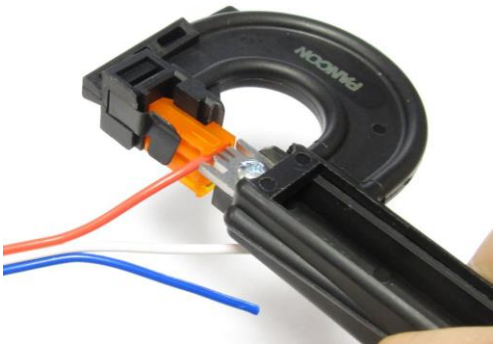

STEP 3:
Start by crimping the first (red) wire.

☝ NOTE ☝
Make sure that you push the cable far enough so it has a firm contact.

Slide the connector to the next position and continue with the next (white) wire and finish with the last (blue) wire.

STEP 4:
Repeat the same procedure on the other side and/or in the middle of the cable.

Photo shows a middle connector. Middle connectors can be put in the middle or at the ends of the cable.

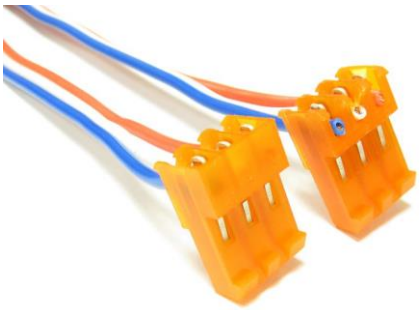

STEP 5:
You should end up with two or more connectors on a cable.

Photo shows one end connector (left) and one middle connector (right).

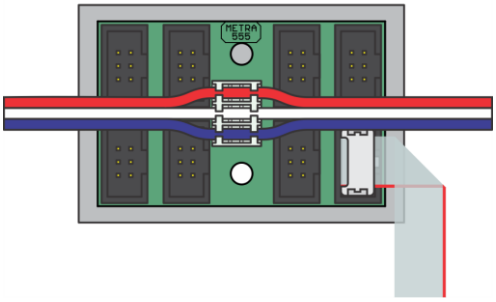

STEP 6:
Connect both ends of the cable to the connection plate and/or MEW Controller.

NOTE: Example shows Link 8 connection plate, main connection cable with middle connector and one 6 pole cable.

• Adjusting the ejector spring force

Depending on the door size and type of the hinges you might need to **adjust the spring force**. Ejector is important part of the lock and should be able to push the doors open when unlocked. For the great majority of locker and hinges type factory settings (normal spring force) are in order. However in some cases (very small doors, spring - shut hinges, etc.) the spring might need to be adjusted. There are two stronger positions and two weaker positions (from approx. 0.5 to 1.5 times of original force). With this intention a 2.5/16 mm screw is supplied. Be sure to screw it all the way in so the head is level with the lock base.

For stronger spring, simply screw it into one of the two positions on the bottom of the body (see picture) the one closer to the ejector end being the stronger one ("A").
For weaker - shorter ejecting travel, first compress the spring totally with the thumb and then screw-in the screw, the position closer to the ejector end now means less ejecting travel (compress & position "A").

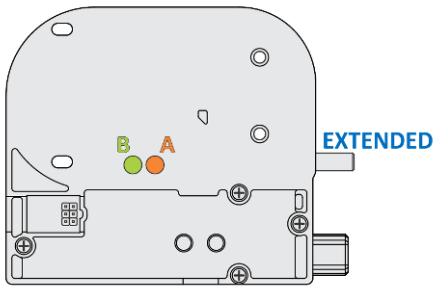

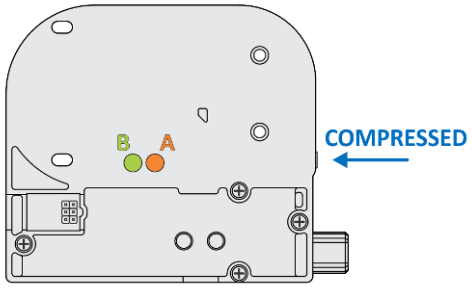

☝ NOTE ☝
Do not over-compress the spring (force ejector inside the lock), as you might damage the switch!

Spring force	Ejector	Screw A	Screw B
Weak	Compressed	✓	
	Compressed		✓
Normal	Extended		
	Extended		✓
Strong	Extended	✓	

• Mounting the lock

General rule is that the lock is better to be placed a **bit forward** of the closed inner plane of the door and should **never be even a fraction** back from that plane.

☝ NOTE ☝
With the term **inner plane of the door** we refer to the surface on which the door strike will be placed and should be able to completely compress the ejector and touch the lock front. All eventual parameters such as rubber bumpers, bent doors, hinge type, euro deposit pad, etc. should be taken into consideration.

Mounting holes for the Electronic Lock RFID should be predrilled in factory according to the specifications in appendices.

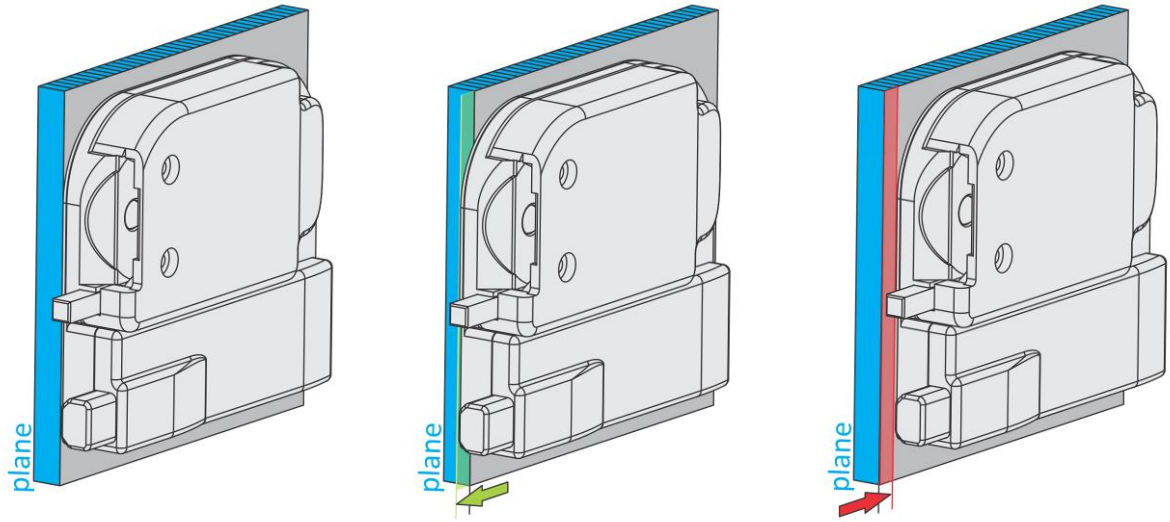

OK – Lock tip is even with the inner plane of the door. The door will reach the lock tip. **Locking is possible.**

OK – Lock tip is over the inner plane of the door. The door will reach the lock tip. **Locking is possible.**

WRONG! – Lock tip is behind the inner plane of the door and the door CANNOT reach the lock tip. **Locking is NOT possible.**

The lock body should be mounted first and then the door strike accordingly. The body is placed on the locker side (for very narrow doors can be also top or bottom). Drillings should be done in accordance with the drawing and the screw type. Insert the connector, fold the extra wire (see "wiring") and screw the lock firmly.

☝ NOTE ☝

Do not over-tighten the screws as they can deform the lock. This may stop it from working and such damages are NOT covered by warranty!

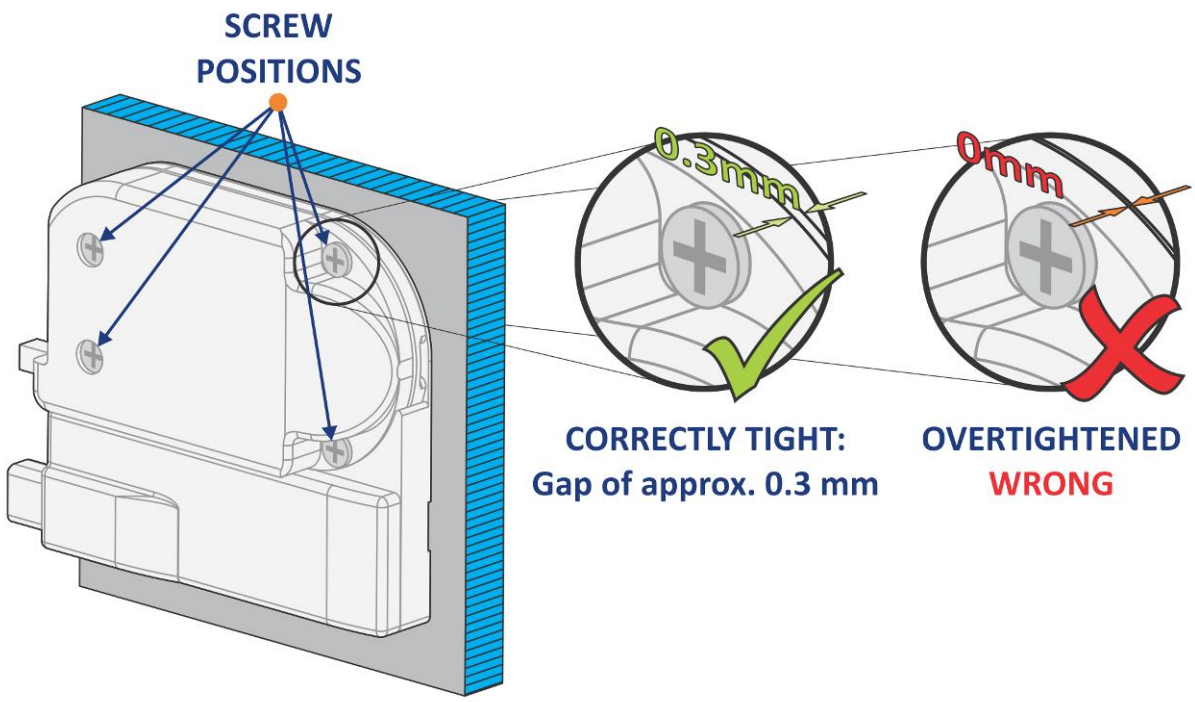

☝ NOTE ☝

If the edge of the locker door is not overlapping the inner edge of the locker compartment for at least 6 millimetres a spacer for the lock is required. As a spacer different solutions are possible. Spacer can also be used to hide the connection cable.

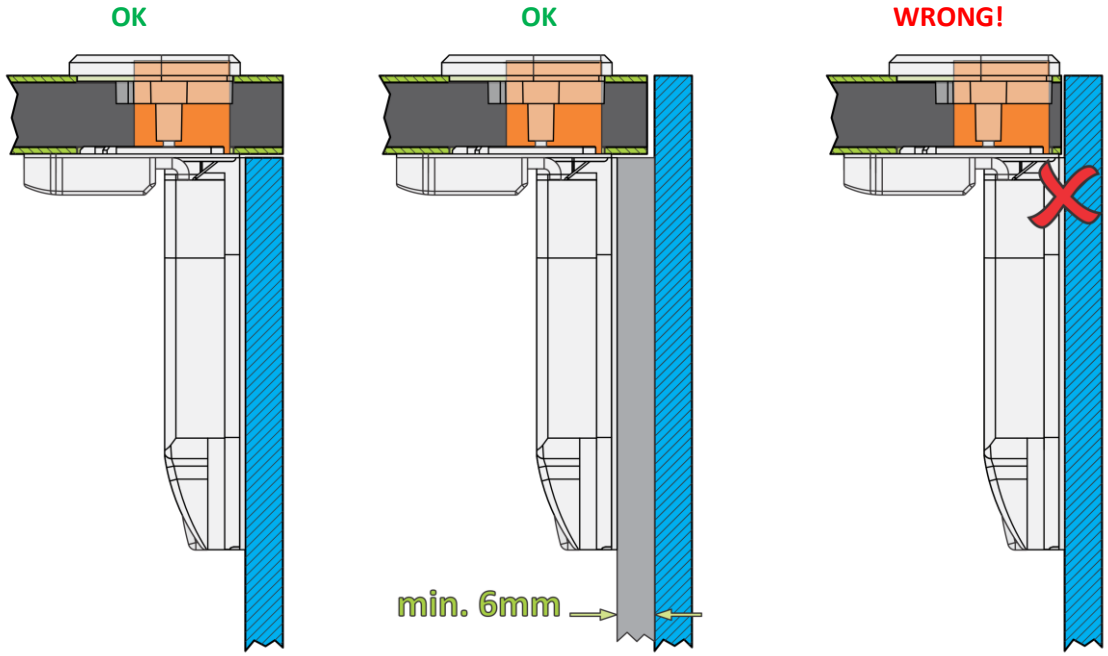

•Procedure

STEP 1:

Mounting holes for electronic lock should be predrilled in factory according to the specifications in appendices and according the requirements described in this chapter.

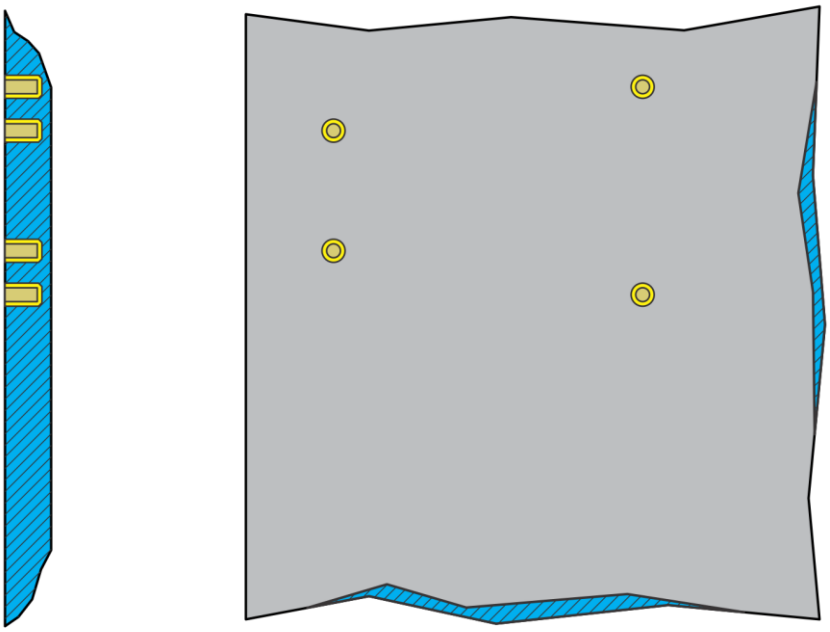

STEP 2:

Fix the lock in place with 4 screws. **NOTE:** Screws are not supplied by Metra.

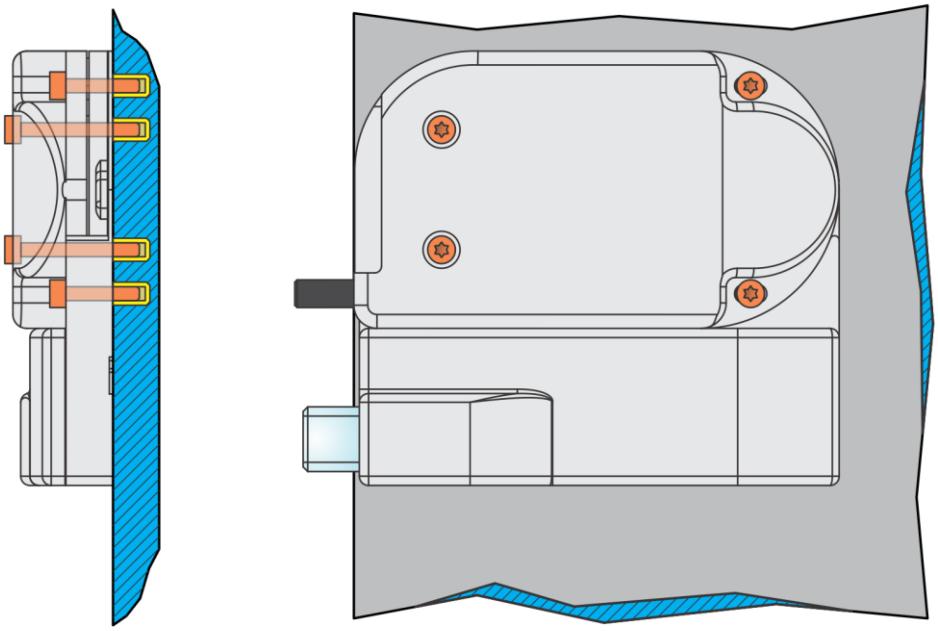

• Mounting the strike

STEP 1:

Mounting holes for door strike should be predrilled in factory according to the specifications in appendices.

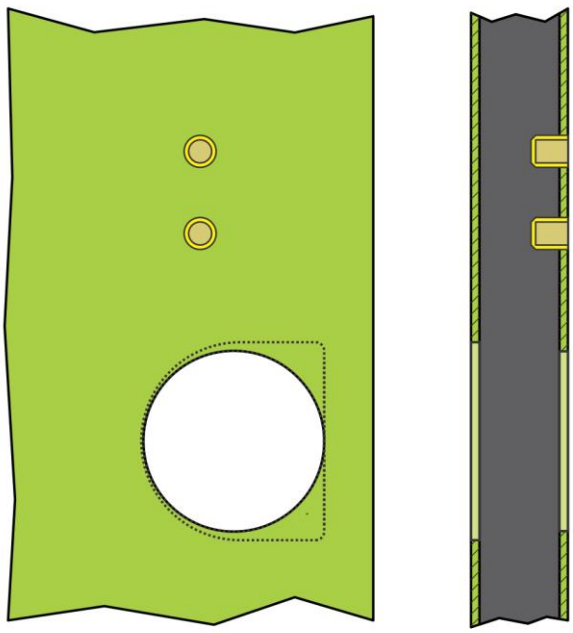

STEP 2:

For easier mounting first stick the plastic cover over the metal pin to the plastic base as shown.

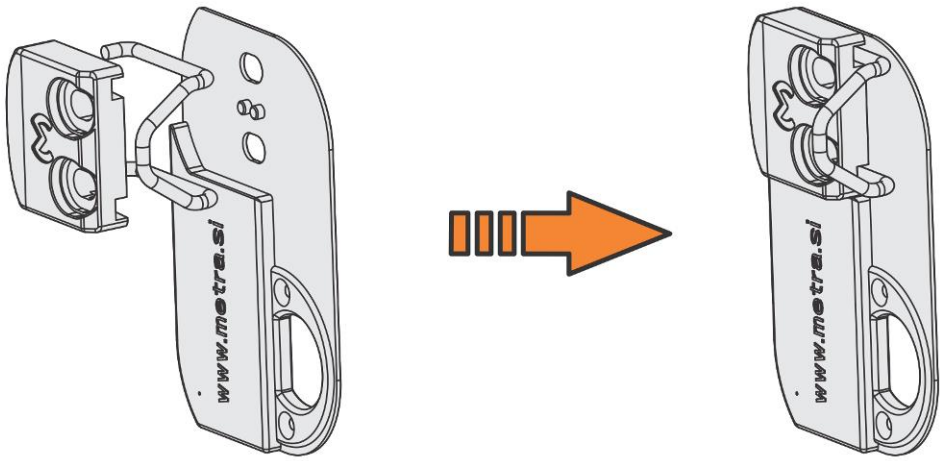

STEP 3:

First fix the strike with two screws. Use supplied washers between the screw and plastic strike body. Then fix the front cover including the antenna and the protective plastic. Use the right length (according to the door thickness) self-tapping screws. When screw is tightened its head should be in line with the base. **NOTE:** Screws are not supplied by Metra. Consult with Metra before choosing the screws.

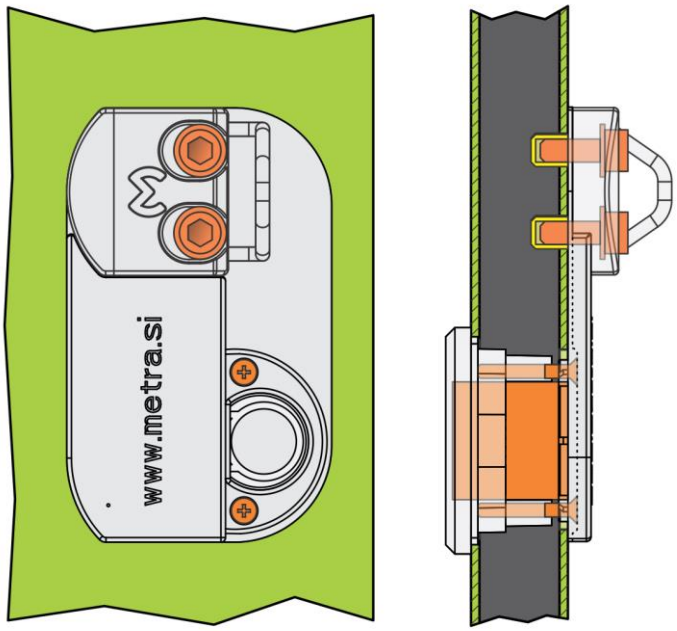

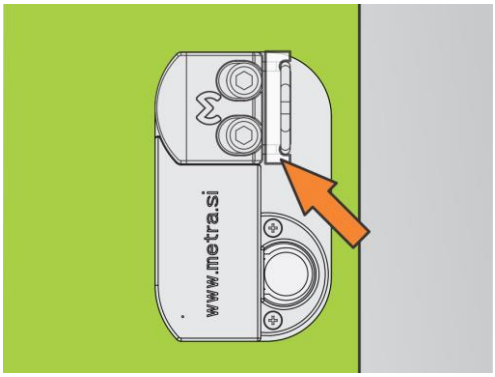

Place Metra mounting jig on the loop and firmly close the door to position the strike and then tighten the screws. Do not over-tight the screws, the wire loop should still move freely. Remove the mounting jig.

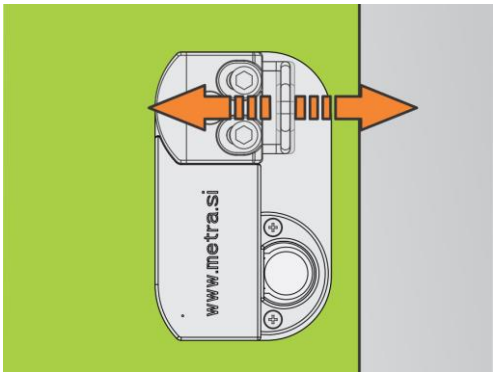

CORRECTLY TIGHT SCREWS

Try moving the Wire loop left and right in the screws are correctly tightened, the wire loop should be able to move.

NOTE: If the lockers are precisely made and quality hinges are used the strike position does not vary from one to another. According to strike position in the first locker all remaining can be positioned the same just on optical evaluation to speed-up the assembly procedure. Final corrections can be done during functional test of the locker if needed.

• Final operational test of the locker

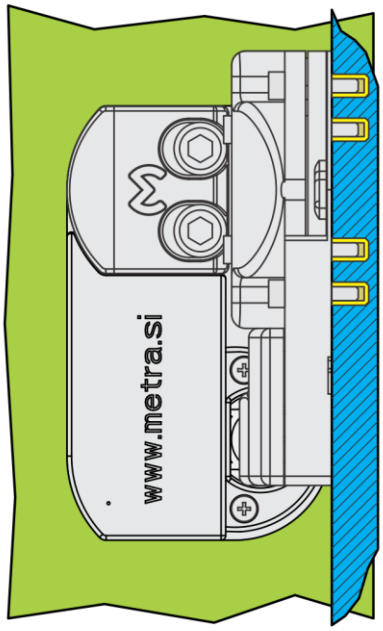

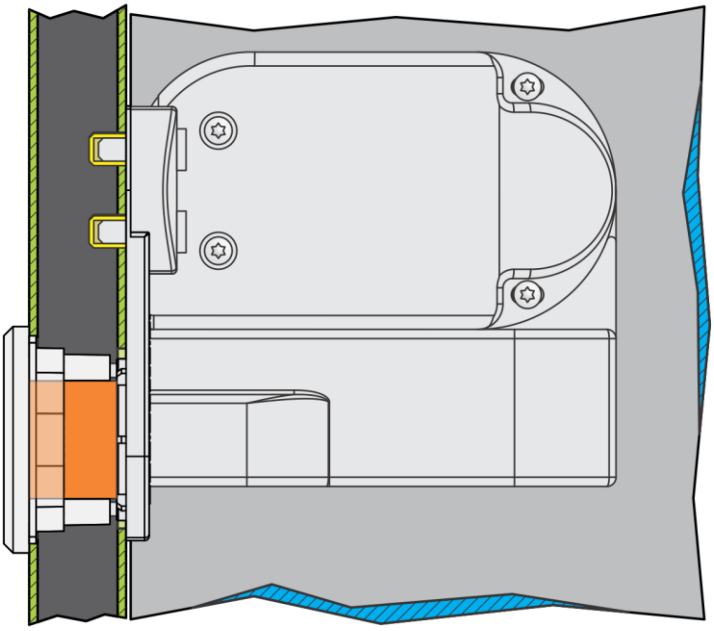

Final check of the locker and mounting should be done after the lock is operational – connected to the driving or test unit.

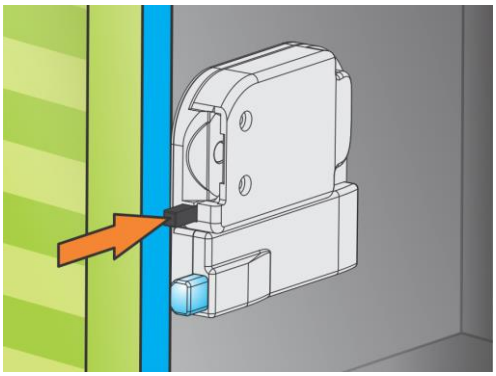

CHECK 1:
Press the ejector to check the operation. The motor should operate swiftly. If not, check the wiring or loose the screws a bit.

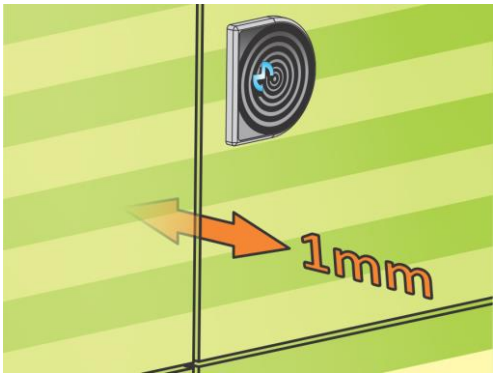

CHECK 2:
Close the doors. **When closed and locked, the doors should have a fraction (1mm) of a "free movement" under the spring.**

• Electronic Lock set-up

MEW Controllers have at least two operating modes: Construction and Normal.

Enter the Construction mode of operation. Consult appropriate MEW Controller Technical Manuals for details.

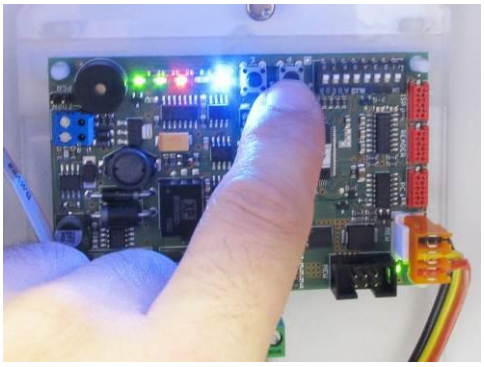

First reset the indexes on the connected Electronic Locks RFID by pressing and holding the PARAMETERS REQUEST button for more than 8 seconds – untill the second acoustic signal is generated. When you release the button **three** short acoustic signals are generated and all connected Electronic Locks RFID start blinking rapidly indicationg that the indexes wre erased.

NOTE:
Lockers must be unlocked before you start the indexing procedure. To open all lockers press the emergency open button.

STEP 1:
To index all Electronic Locks RFID connected to the device start by Electronic Lock RFID with the lowest locker number and rapidly press the plunger 3 times.

STEP 2:
If the Electronic Lock RFID was successfully indexed it will blink as many times as the set index.

index 1 … 1 blink
index 2 … 2 blinks
index 3 … 3 blinks
…
index 16 … 16 blinks

STEP 3:
Repeat the procedure on all connected locks from lowest to highest locker number.

• RFID reader test

MEW Controllers have at least three operating modes: Construction, Normal, RFID test, etc.

Enter the RFID test mode of operation. Consult appropriate MEW Controller Technical Manuals for details.

STEP 1:
To test the RFID reader close the locker door and hold them closed. Electronic Lock RFID starts to blink red.

STEP 3:
Present the RFID media. When the RFID media is in the antenna field, the Electronic Lock RFID will start blinking green.

• Maintenance of the lock

If mounted correctly as described above and under normal conditions the lock should give you long lasting, trouble free operation. Due to the hi-tech and hi quality materials used, there is virtually no maintenance needed. Occasional (depends on the environment, usually once or twice a year) cleaning of accumulated dust particles, lubrication of the locking ball with the PTFE (Teflon) spray and wiping of exceeded lubrication is recommended.
Do not expose the lock to the water dripping or direct water jet when cleaning the cabinet!
Occasional reposition of the door strike might be needed due to the hinge or cabinet construction wear, depending on the locker quality and frequency of use. The lock construction can handle self – reposition of approx. 1mm vertical and horizontal disposition if mounted ideally.
Any lock that has endured the brake inn attempt (has been stressed over 80kg) should be replaced. Thanks to the connector that is relatively simple, only replace the lock body and (if damaged) the strike, rewiring is not necessary.

Appendix

1 **Dimensions**

Dimensions

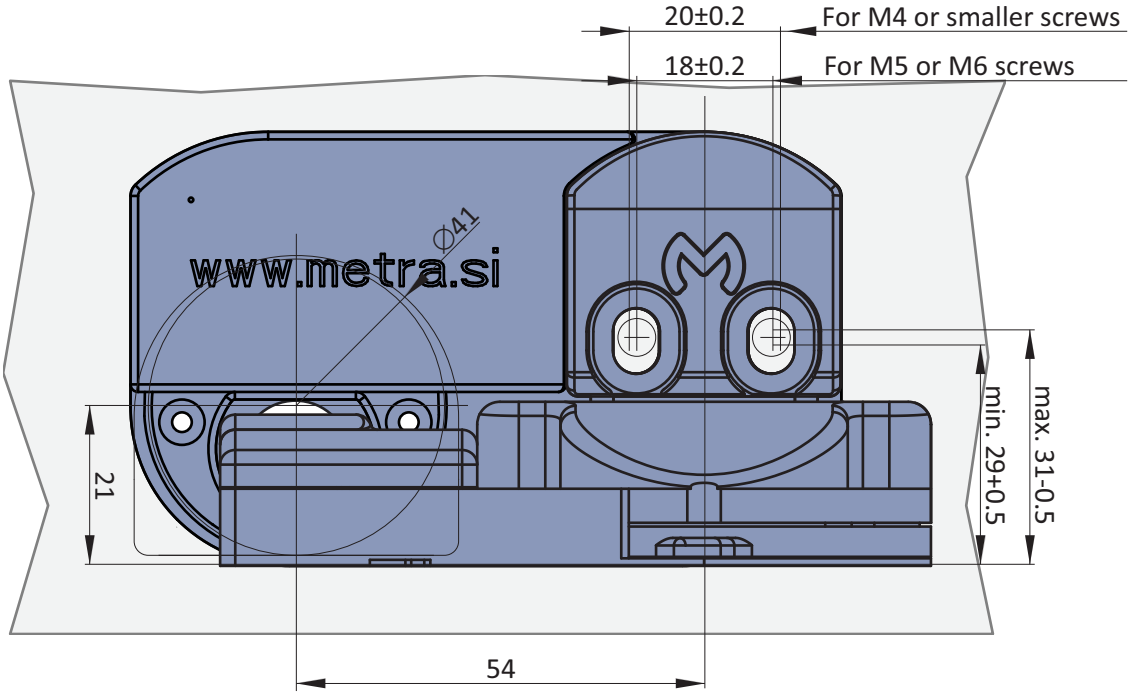
20±0.2
For M4 or smaller screws
18±0.2
For M5 or M6 screws
www.metra.si
Ø41
21
min. 29+0.5
max. 31-0.5
54

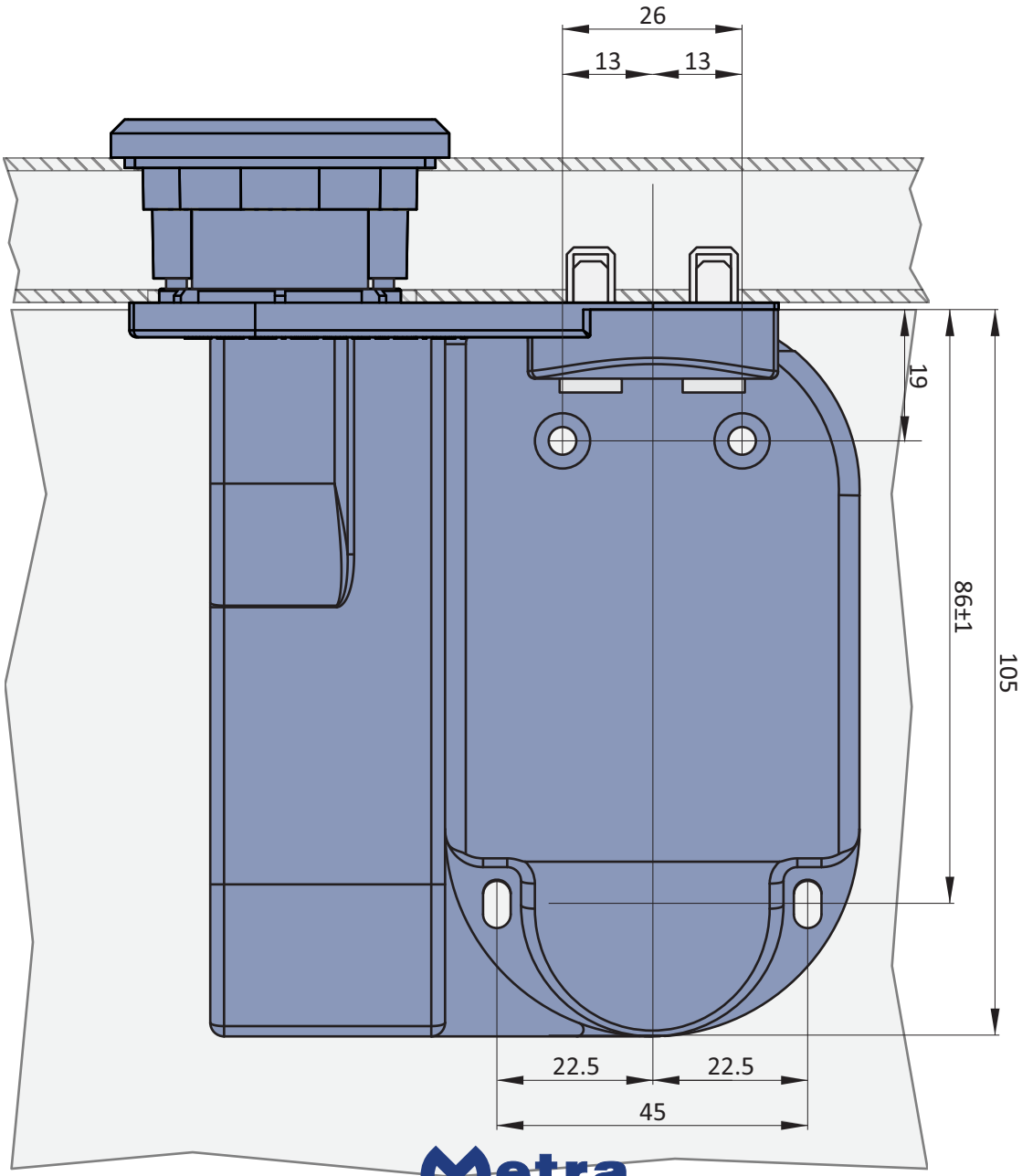
26
13
13
19
86±1
105
22.5
22.5
45