ELECTRONIC TAGS

2.6-inch ultra-thin ESL
DS026 Specification

Datasheet V1.1

MINEW TAG

DS026

BRIEF INTRODUCTION

DS026 is a 2.6-inch super-thin ESL independently developed by MinewTag, utilizing the latest Bluetooth® Low Energy 5.0 Technology. It features a 7.8mm ultra-thin design, secure and fast data transfer, and agile, flexible screen refresh. Adopting the latest E-ink display technology, DS026 provides a fully-graphic display and paperlike appearance. With the 2.5D transparent shell, it delivers a nearly 180° viewing angle for excellent readability.

SPECIFICATION

Material	ABS+PC
Color	White
Dimension	84.6*41*7.8mm
Display Technology	EPD
Screen size	2.66-inch
Display Area	60.1*30.7mm
Resolution	152 * 296px
Pixel Density	125 dpi
Weight	30 g
Battery Lifetime	8 Years(5 updates/day)
Fixing Ways	Shelf Rail/Paste etc.
Display Color	Black/White/Red

HIGHLIGHT

- Updating in seconds
- 8-year battery lifetime (5 updates/day)
- REST API
- LED location indicator
- Managed by Cloud/APP
- Custom templates
- 2.5D transparent shell
- 7.8mm ultra-thin design

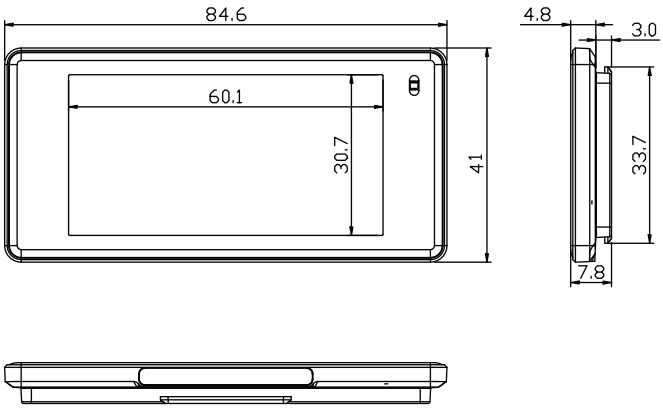

TECHNICAL PARAMETER

Communication Protocol	Bluetooth®Low Energy 5.0
Battery	Custom Batteries
Transmitting Distance	60-70 Meters
Working Humidity	50±20%RH
Operating Temperature	0°C-40°C
Storage Temperature	-20°C-60°C

Copyright © All Rights Reserved by Minewtag

FCC Requirement

changes or modifications not expressly approved by the party responsible for compliance could void the user' s authority to operate the equipment.

This device complies with Part 15 of the FCC Rules. Operation is subject to the following two conditions:
(1) this device may not cause harmful interference, and
(2) this device must accept any interference received, including interference that may cause undesired operation.

Note: This equipment has been tested and found to comply with the limits for a Class B digital device, pursuant to Part 15 of the FCC Rules. These limits are designed to provide reasonable protection against harmful interference in a residentialinstallation. This equipment generates, uses, and can radiate radio frequency energy, and if not installed and used in accordance with the instructions, may cause harmful interference to radio communications. However, there is no guarantee that interferencewill not occur in a particular installation. If this equipment does cause harmful interference to radio or television reception,which can be determined by turning the equipment off and on, the user is encouraged to try to correct the interference by one or more of the following measures:
– Reorient or relocate the receiving antenna.
– Increase the separation between the equipment and receiver.
– Connect the equipment into an outlet on a circuit different from that towhich the receiver is connected.
– Consult the dealer or an experienced radio/TV technician for help.

To maintain compliance with FCC's RF Exposure guidelines, This equipment should be installed and operated with minimum distance between 20cm the radiator your body: Use only the supplied antenna.

Address: Building I, Gangzhilong Science Park, Qinglong Road,
Longhua District, Shenzhen, 518109, China
Phone: +86(755)2103 8160
Email: info@minewtag.com
Website: https://www.minewtag.com