Alpha 500i Series

Industrial Radio Remote Control System

Operation & Parts Manual

Williams Y-R-Less, LLC

13101 Eckles Road, Bldg #2, Suite 105 Plymouth, Michigan 48170

Phone: (734) 416 5520 Fax: (734) 416 1907

Web site: www.williamsyrless.com

E-mail: williamsyrless@aol.com

IMPORTANT NOTES!

1. **Startup Procedure** _ You must make sure that the red EMS button located on the top right-hand side of the transmitter is elevated prior to turning "on" the power (battery) switch, by twisting it 1/4 turn clockwise, it will pop up. Then turn "on" the power (battery) switch located on the top left-hand side of the transmitter. The Status LED at the center of the power switch will display a green light for up to 2 seconds when the power switch is turned "on".

   Note A: Whenever the EMS button is depressed you must reenact the Startup Procedure, that is, elevate the EMS button then turn the power (battery) switch "Off" then back "On".

   Note B: Depressing (holding down) any buttons during the "Startup Procedure" will disable the transmitter.

2. **Receiver Main Relay will Drop (Open) in 5 minutes** _ Your receiver Main relay is programmed to drop (open) the Main Line Disconnect Contactor after 5 minutes of inactivity, that is, 5 minutes after the last button is released. Depressing any transmitter button will close the Main relay and start the timing sequence over again. But, if your crane or hoist is equipped with VFD drives this can cause an unacceptable delay, in this situation we suggest you remove the JP2 jumper, then the Main relay will remain closed until the Stop command is received, see your manual for details.

3. **Caution! Improper Storage of your Spare Transmitter is a Safety Hazard!** _ During the initial installation of your remote control system the spare (second) transmitter should be tested to confirm that it is functioning properly and then the batteries must be removed and the transmitter stored in a secured place. **Failure to follow this safety procedure can result in the inadvertent operation of your crane or hoist by unauthorized personnel resulting in serious injury or death!**

TABLE OF CONTENTS

		Page
1.	SAFETY INSTRUCTION	3
2.	PUSHBUTTON CONFIGURATION	
	2.1 Alpha 504i	4
	2.2 Alpha 508i	
	2.3 Alpha 512i	6
3.	TRANSMITTER OUTLINE	
	3.1.1 Alpha 504i	7-8
	3.1.2 Alpha 508i	8-9
	3.1.3 Alpha 512i	10-11
	3.2 Spare Parts	11
4.	RECEIVER OUTLINE	
	4.1. Alpha 504i External/Internal Assembly	12-13
	4.2 Alpha 508i External/Internal Assembly	14-15
	4.3 Alpha 512i External/Internal Assembly	16-17
5.	OUTPUT CONTACT DIAGRAMS	
	5.1 Alpha 504i	18
	5.2 Alpha 508i	19-20
	5.3 Alpha 508i	21
	5.4 Alpha 512i	22-28
6.	TRANSMITTER SETTING	
	6.1 How to Set ID Codes	29
	6.2 Transmitter RF Channel Setting	30
7.	RECEIVER SETTING	
	7.1 How to Set Receiver ID Codes	31
	7.2 Receiver RF Channel Setting	32
	7.3 Receiver Function Setting	32-35
	7.4 Frequency (RF) Channels Table	36
8.	TRANSMITTER OPERATION & STATUS LIGHT	
	8.1 Transmitter Operating Steps	37-38
	8.2 Transmitter Status light	38
9.	RECEIVER INSTALLATION	
	9.1 Preparation For Installation	39
	9.2 Step-By-Step Installation	39-40
	9.3 System Testing	40
	9.4 Receiver System Status LED Display	41-42
10.	TROUBLE SHOOTING	43
11.	SYSTEM SPECIFICATION	44-45
12.	PARTS LIST	46

1. SAFETY INSTRUCTION

The Alpha 500i series are relatively simple to use, however, it is very important to observe the proper safety procedures before, during, and after operation. When used properly, the Alpha 500i series will enhance safety, productivity and efficiency in the workplace.

The following procedures should be strictly followed:

1. Do not change the IDs on transmitter encoder and receiver decoder boards at will.
2. Check the transmitter casing and pushbuttons daily. Should any damage that could inhibit the proper operation of the transmitter be found the unit should be immediately removed from service.
3. Check the transmitter voltage whenever it is operated.
4. The red emergency stop button (EMS) should be checked at the beginning of each shift to ensure it is in proper working order and the “Stop” command is being received by the receiver.
5. In the event of an emergency press down the EMS button will immediately deactivates the receiver MAIN relay and the transmitter power. Then turned the power “off ” from the main power source to the crane or equipment.
6. Do not use the same RF channel and ID code as any other system in use at the same facility or within 300-meter distance.
7. Ensure the waist belt is worn at all time during operation to avoid accidental damage to the transmitter.
8. Rotate the power switch to OFF position when the transmitter is not operated temporarily or the operation is finished.
9. Any repair or adjustment should be proceeding by repair technician for radio remote controls.
10. The operator should not change any electrical parts at will.
11. This device complies with Part 15 of the FCC Rules and with Industry Canada license-exempt RSS standard(s). Operation is subject to the following two conditions: (1) This device may not cause harmful interference, and (2) This device must accept any interference received, including interference that may cause undesired operation.
12. Le présent appareil est conforme aux CNR d'Industrie Canada applicables aux appareils radio exempts de licence. L'exploitation est autorisée aux deux conditions suivantes : (1) l'appareil ne doit pas produire de brouillage, et (2) l'utilisateur de l'appareil doit accepter tout brouillage radioélectrique subi, même si le brouillage est susceptible d'en compromettre le fonctionnement.

Note: Changes or modifications not expressively approved by the party responsible for compliance could void the user's authority to operate the equipment. The term "IC:" before the radio certification number only signifies that Industry Canada Specifications were met.

2. PUSHBUTTON CONFIGURATION

2.1 Alpha 504i Subgroup Transmitters and Receiver

1. Alpha 504A -- (4) single speed pushbuttons
2. Alpha 504B -- (4) double speed pushbuttons

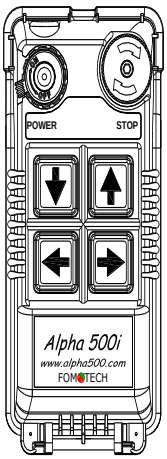

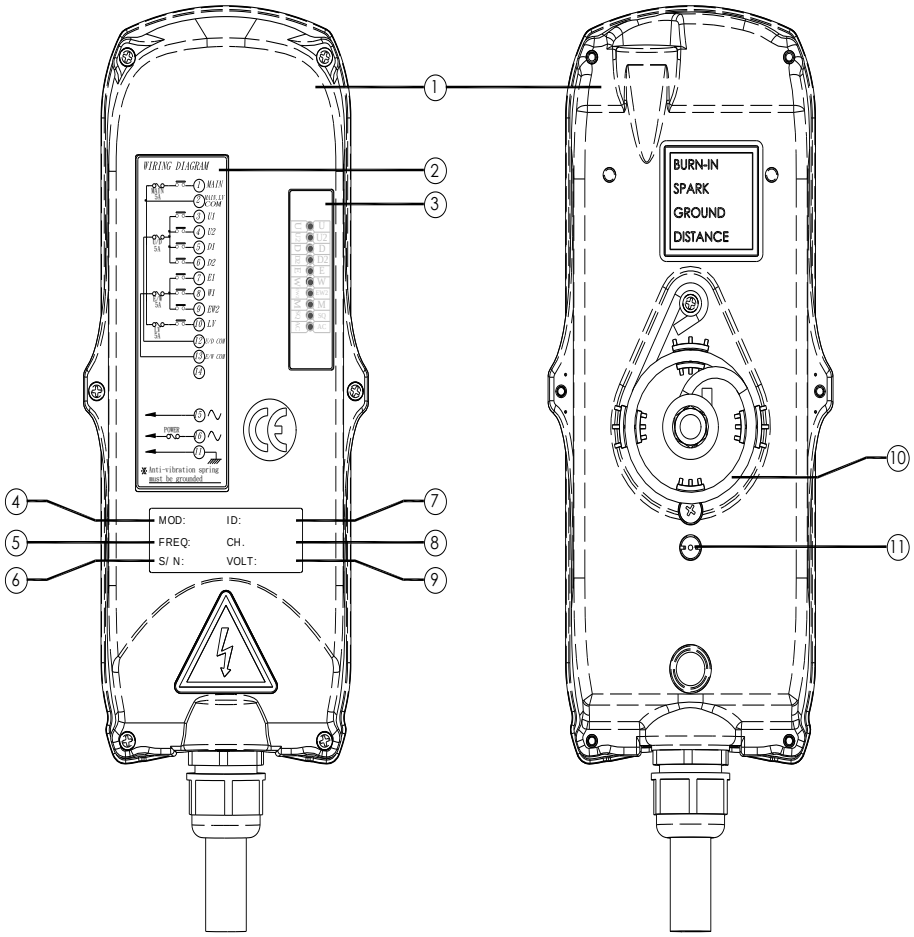

Front View Back View

1)	Receiver enclosure	5)	System frequency	9)	Supplied voltage
2)	Wiring diagram	6)	System serial number	10)	Anti-vibration spring
3)	Receiver LED displays*	7)	System ID code	11)	Grounding (GND)
4)	Type model	8)	System RF channel		

2.2 Alpha 508i Subgroup Transmitters and Receiver

1. Alpha 507A -- (7) single speed pushbuttons
2. Alpha 507B -- (6) double speed pushbuttons + (1) single speed pushbuttons
3. Alpha 507AT -- (6) single speed pushbuttons + (1) SELECT I/II pushbutton
4. Alpha 507BT -- (6) double speed pushbuttons + (1) SELECT I/II pushbutton
5. Alpha 508A -- (8) single speed pushbuttons
6. Alpha 508B -- (6) double speed pushbuttons + (2) single speed pushbuttons

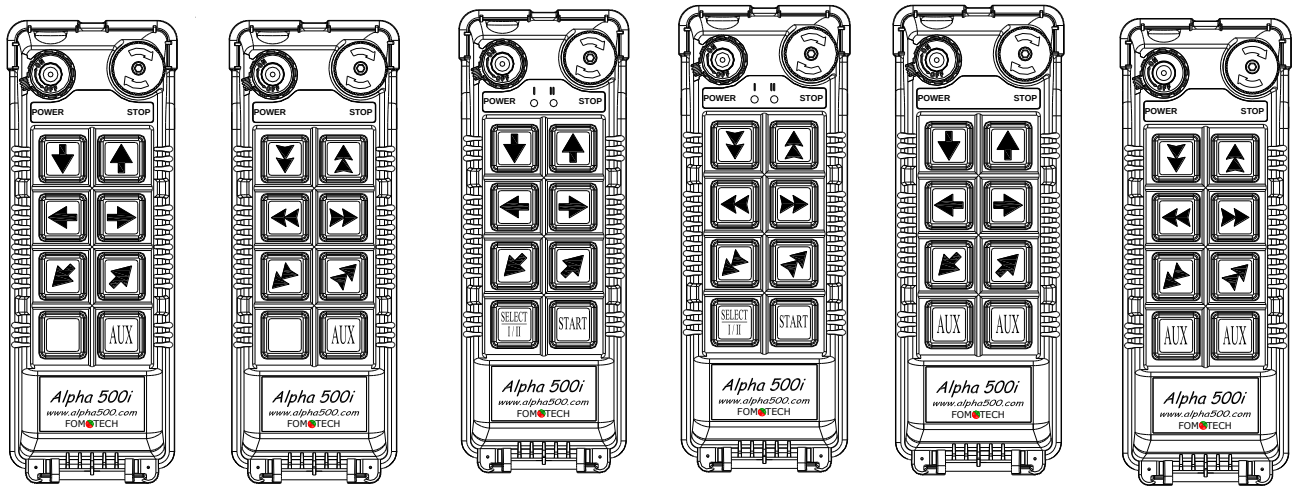

(Alpha 507A) (Alpha 507B) (Alpha 507AT) (Alpha 507BT) (Alpha 508A) (Alpha 508B)

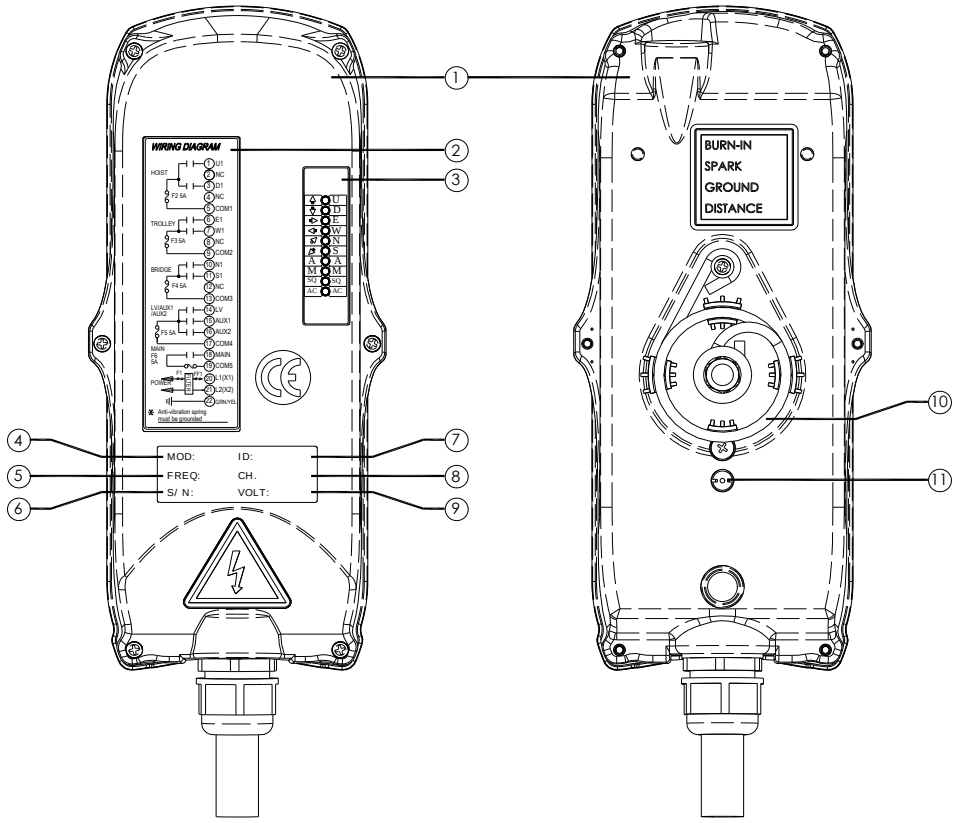

Front View Back View

1) Receiver enclosure
2) Wiring diagram
3) Receiver LED displays*
4) Type model
5) System frequency
6) System serial number
7) System ID code
8) System RF channel
9) Supplied voltage
10) Anti-vibration spring
11) Grounding (GND)

2.3 Alpha 512i Subgroup Transmitters and Receiver

1. Alpha 512A -- (12) one-speed pushbuttons
2. Alpha 512B -- (11) one-speed pushbuttons + I/II select pushbutton*
3. Alpha 512C-1 -- (6) two- speed + (6) one-speed pushbuttons
4. Alpha 512C-2 -- (8) two-speed + (4) one-speed pushbuttons
5. Alpha 512D -- (10) two-speed + (2) one-speed pushbuttons
6. Alpha 512E-1 -- (6) two-speed + (5) one-speed pushbuttons + I/II select pushbutton*
7. Alpha 512E-2 -- (8) two-speed + (3) one-speed pushbuttons + I/II select pushbutton*

* For cranes with auxiliary hoist and trolley (changeover function).

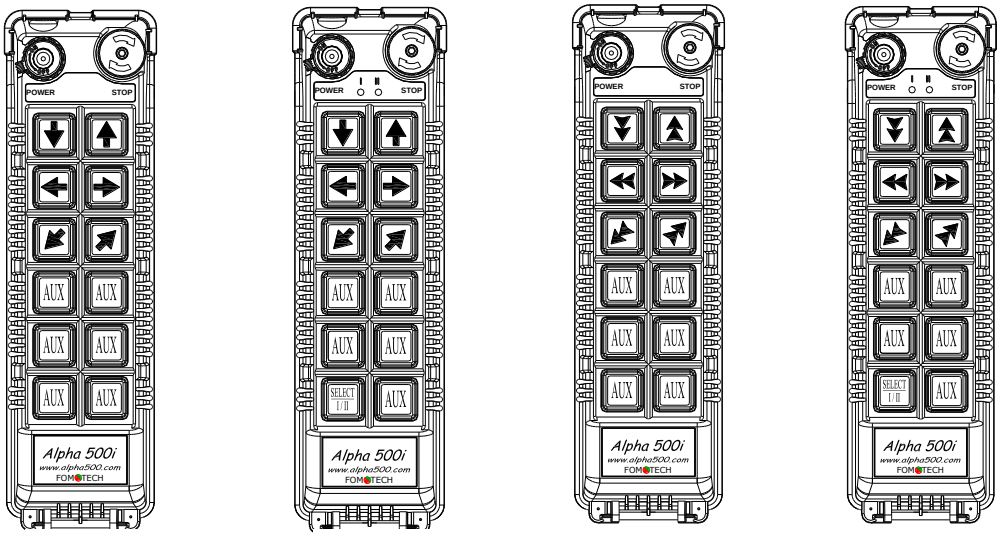

α 512A α 512B α 512C-1/C-2/D α 512E-1/E-2

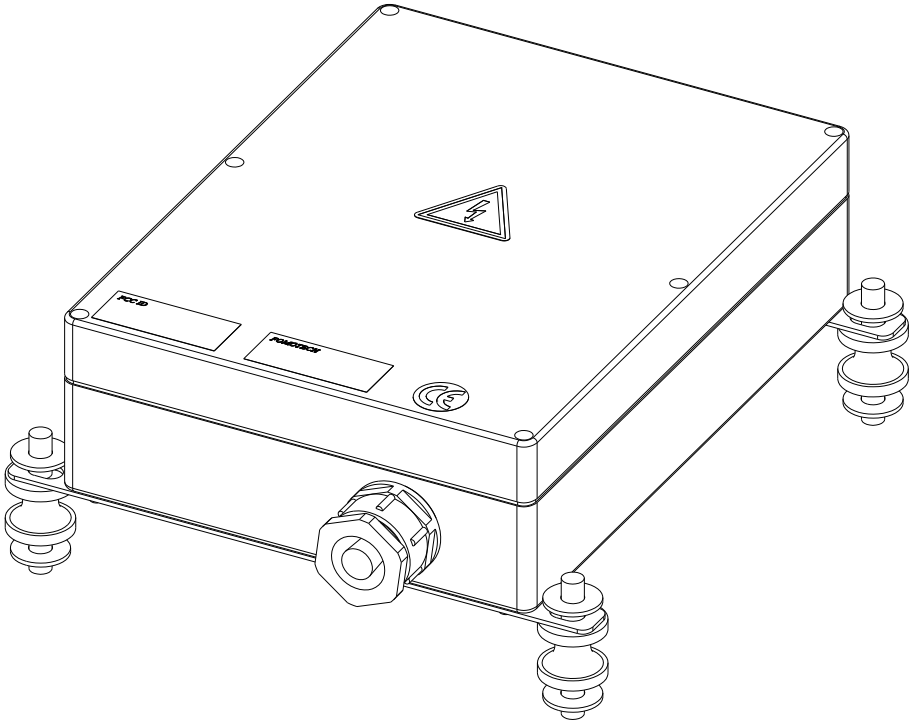

1) Transparent top cover
2) Light-gray colored base
3) Mounting bracket with shock absorbers
4) Cable gland / Cord grip

3. TRANSMITTER OUTLINE

3.1 Transmitter Outline

3.1.1 Alpha 504i

3.1.1.1 SIZE：140mm X 68mm X 30mm

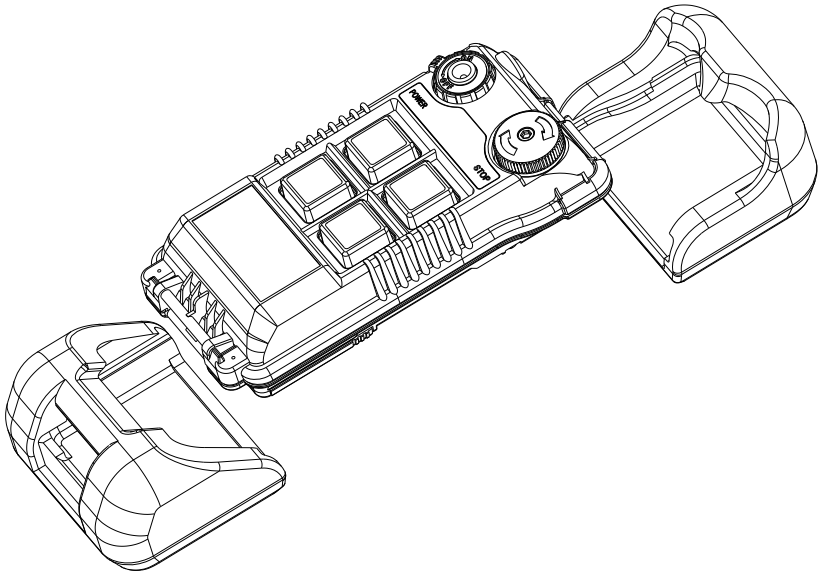

(Fig.1) Transmitter Outline

3.1.1.2 TX INTERNAL MODULE – Encoder board

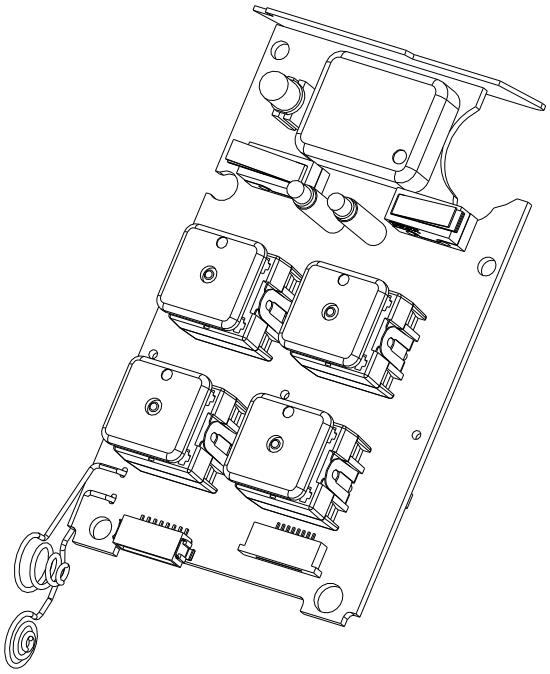

(Fig.2) Encoder board

3.1.1.3 TRANSMITTER INTERNAL ASSEMBLY

(1) Internal antenna
(2) Status LED display
(3) Battery contact
(4) Programming port
(5) Function setting Dip-switch
(6) JP2 setting pin
(7) JP1 setting pin

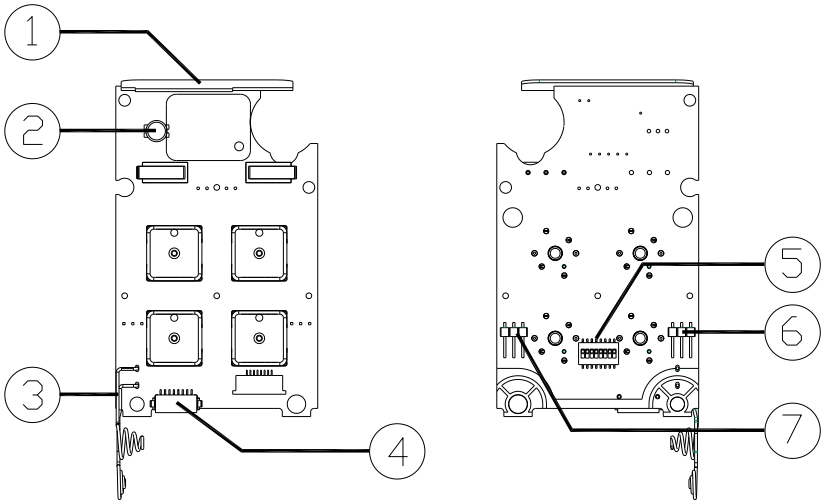

3.1.2 Alpha 508i

3.1.2.1 SIZE: 189mm X 68mm X 30mm

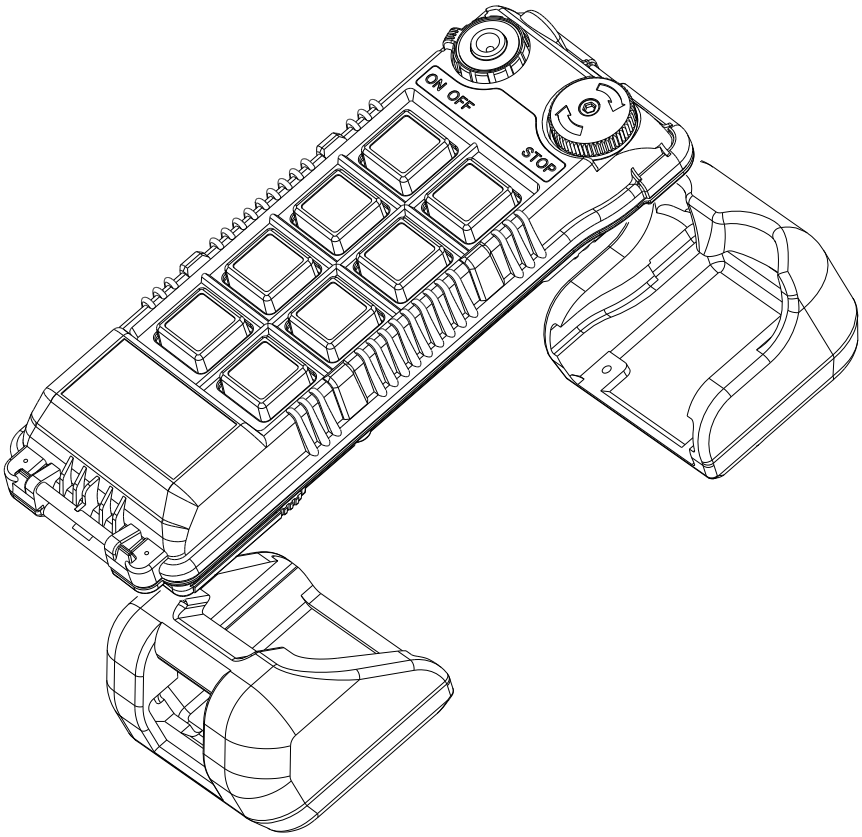

(Fig.3) Transmitter Outline

3.1.2.2 TX INTERNAL MODULE – encoder board

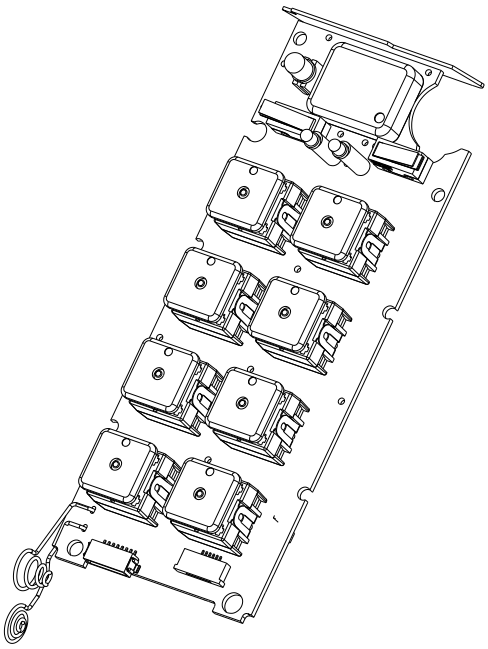

(Fig.4) Encoder board

3.1.2.3 TRANSMITTER INTERNAL ASSEMBLY

(1) Internal antenna
(2) Status LED display
(3) Battery contact–
(4) Programming port
(5)Function setting Dip-switch
(6)JP2 setting pin
(7)JP1 setting pin

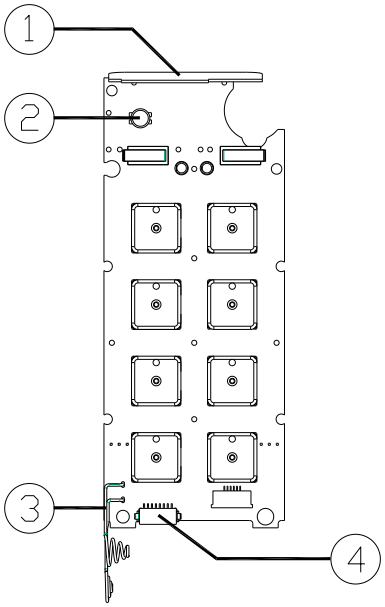

(Fig.5) Front View

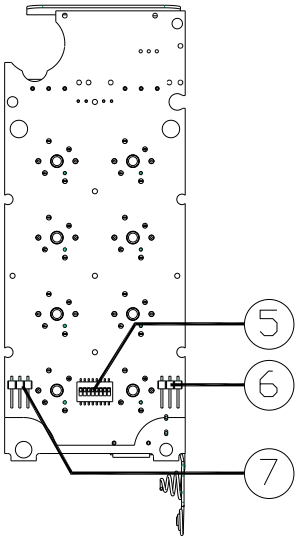

(Fig.6) Back View

3.1.3 Alpha 512i

3.1.3.1 SIZE: 235mm X 68mm X 30mm

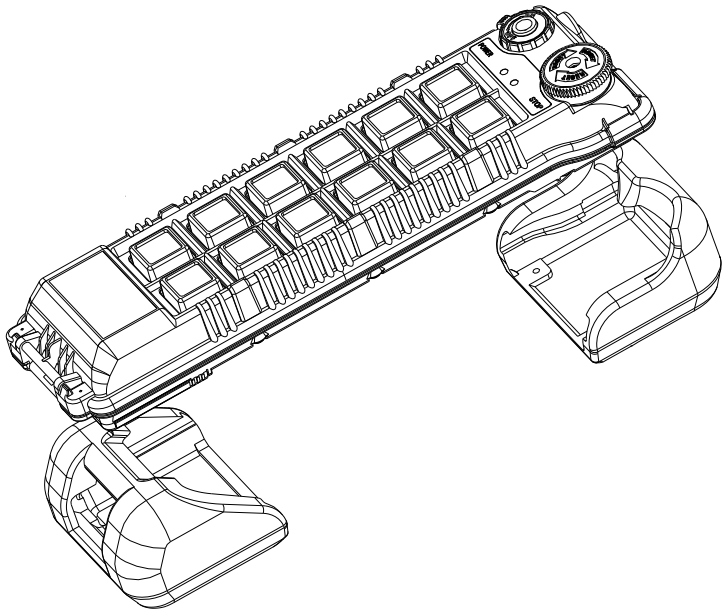

(Fig.7) Transmitter Outline

3.1.3.2 TX INTERNAL MODULE

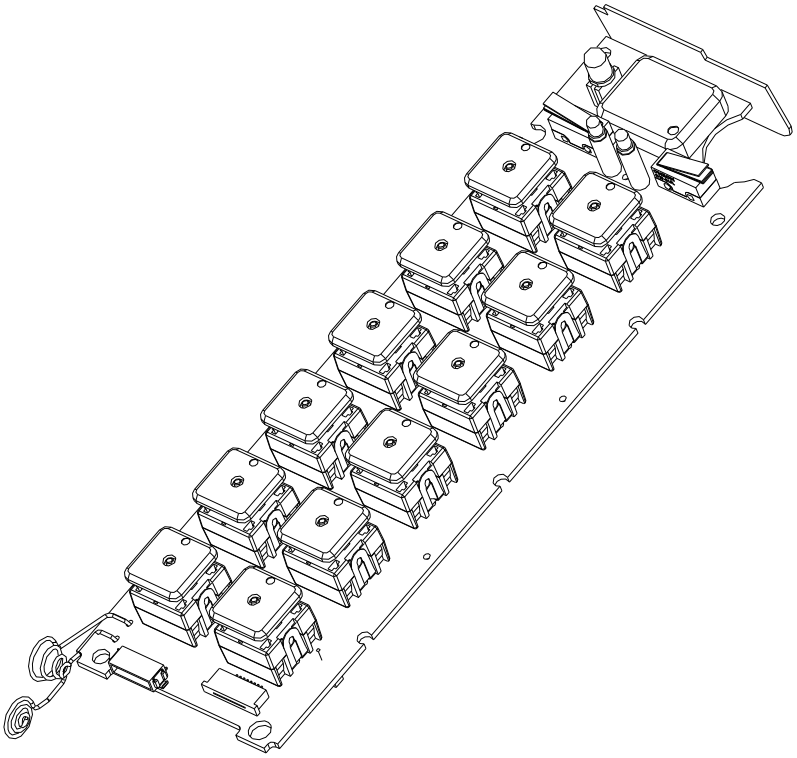

(Fig.8) Encoder Board

3.1.3.3 TRANSMITTER INTERNAL ASSEMBLY

(1) Internal antenna
(2) Status LED display
(3) Battery contact
(4) Programming port
(5) Function setting Dip-switch
(6) JP2 setting pin
(7) JP1 setting pin

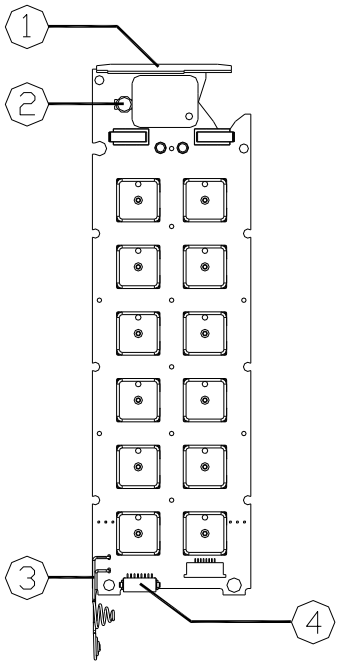

(Fig.9) Front View

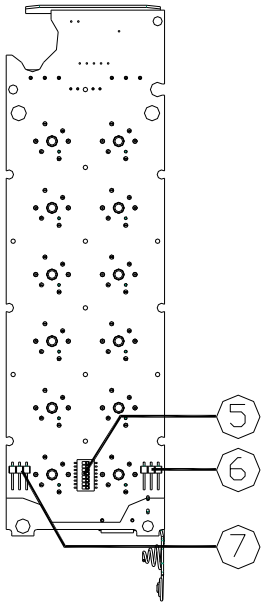

(Fig.10) Back View

3.2 Spare Parts

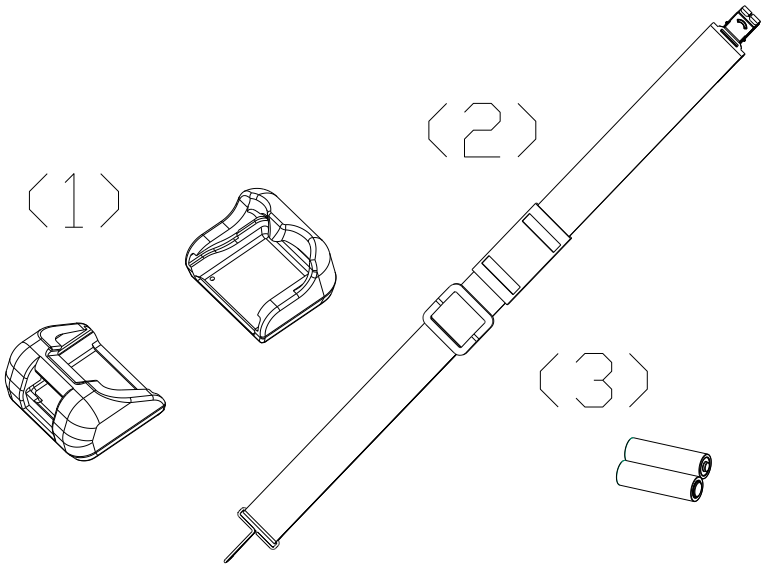

(Fig.11) Back View

(1) Transmitter shock-absorbing rubber
(2) Shoulder strap
(3) AA alkaline batteries

4. RECEIVER OUTLINE

4.1 Alpha 504i

4.1.1 External Assembly

SIZE：310mm X 134mm X 72mm

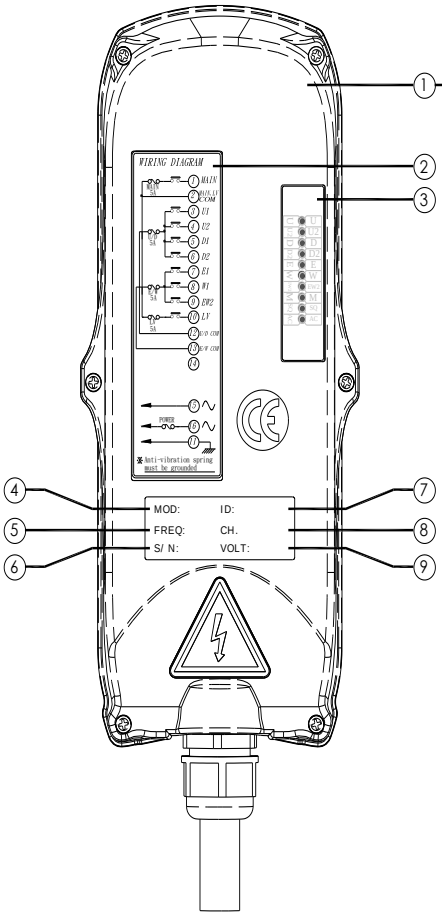

(Fig.12) Front View

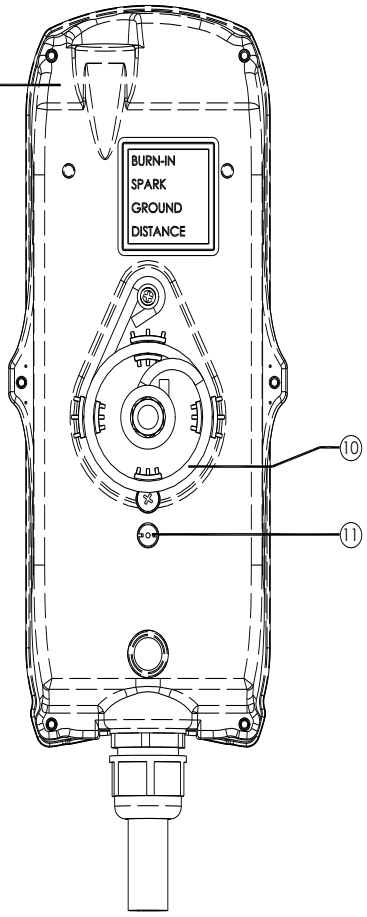

(Fig.13) Back View

5) Receiver enclosure
6) Wiring diagram
7) Receiver LED displays*
8) Type model

5) System frequency
6) System serial number
7) System ID code
8) System RF channel

9) Supplied voltage
10) Anti-vibration spring
11) Grounding (GND)

* **A** ~ AUX Relay Contact Indicator (for Alpha 540A/560A models only).

* **M** ~ MAIN and 2nd Speed Relay Contact Indicator.

Green "on" → MAIN activated (All models).

Red "on" → 2nd speed activated (for Alpha 560S/A models only).

* **SQ** ~ RF Signal Indicator (Red).

"on" → RF signal detected and received.

"off" → No RF signal detected or received.

Blinking at transmitter power "off" → Other radio interference.

* **AC** ~ Power Source Indicator (red) "on" → AC input power supplied.

"off" → No AC input power.

4.1.2 Alpha 504i Internal Assembly

(Fig. 15) Internal Parts Assembly

1) Receiving RF module
2) Secondary power AC fuse (0.50A)
3) Primary power AC fuse (1.0A)
4) System status LED display*
5) External antenna port
6) ID code dip-switch
7) RF channel dip-switch
8) Contact relay LED display
9) Pushbutton #1 and #2 fuse (5.0A)
10) MAIN fuse (5.0A)
11) Contact output seat (CN3)
12) Low-voltage (LV) fuse (5.0A)
13) Contact output seat (CN4)
14) Pushbutton #3 and #4 fuse (5.0A)
15) AC power input seat (CN2)
16) Cable gland & output cable

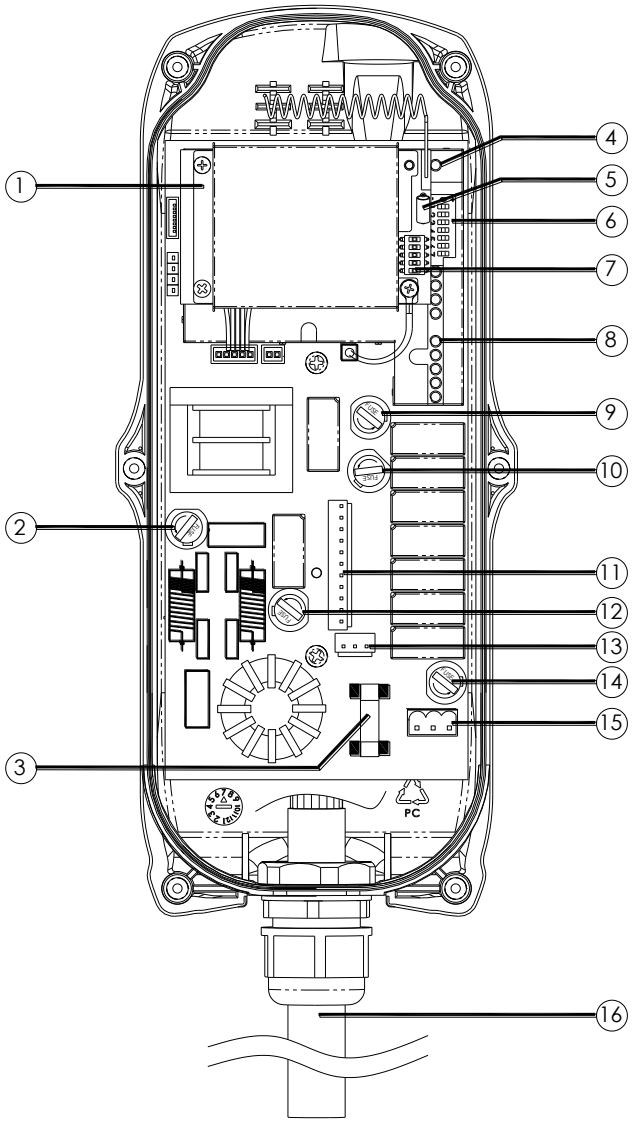

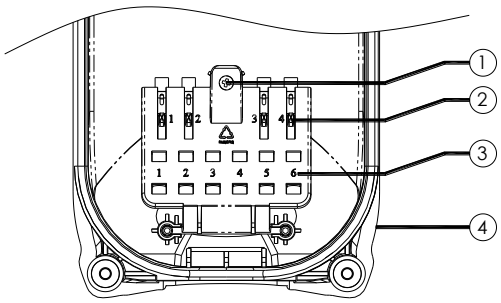

1) Spare fuse & jumper compartment
2) Spare Jumper slots
3) Spare fuse slots
4) Receiver top casing

4.2 Alpha 508i

4.2.1 External Assembly

SIZE：310mm X 134mm X 72mm

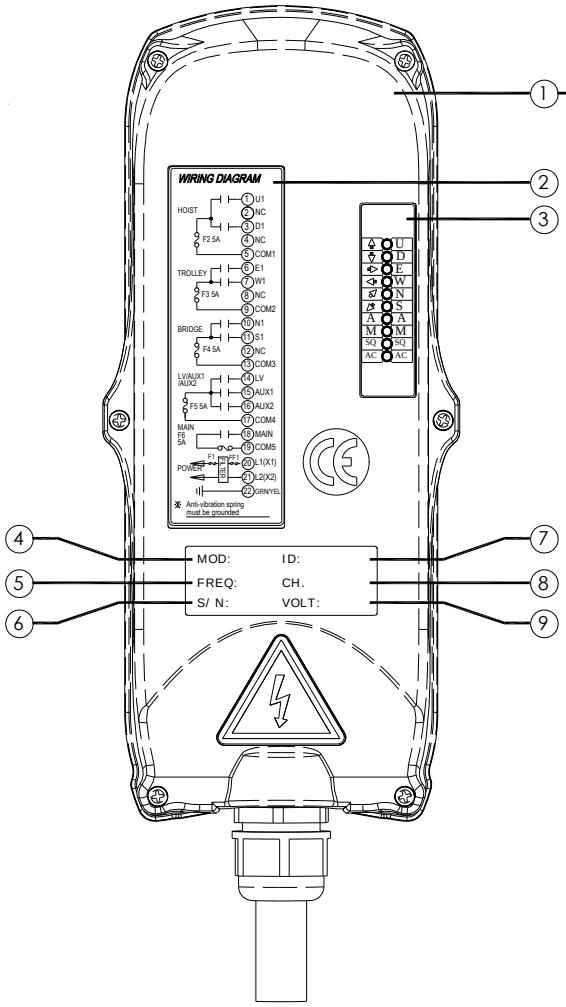

(Fig.14) Front View

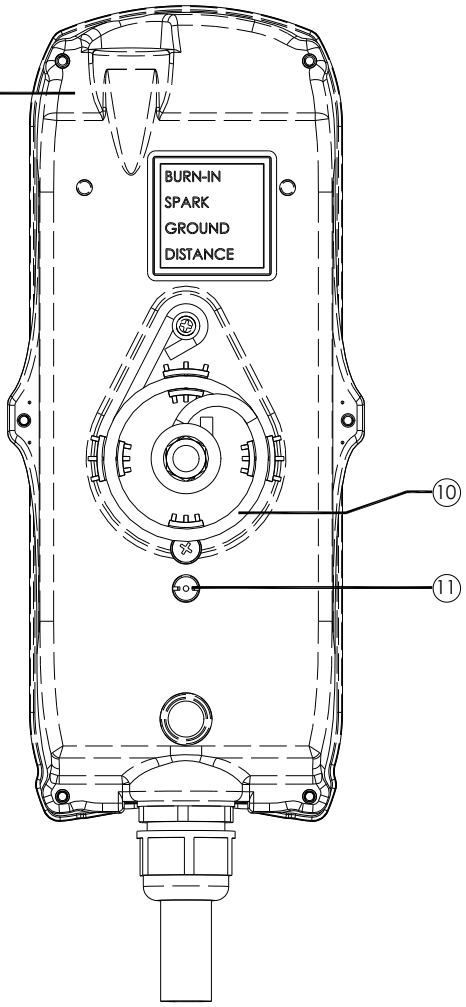

(Fig.15) Back View

5) Receiver enclosure
6) Wiring diagram
7) Receiver LED displays*
8) Type model

5) System frequency
6) System serial number
7) System ID code
8) System RF channel

9) Supplied voltage
10) Anti-vibration spring
11) Grounding (GND)

4.2.2 Alpha 508i Internal Assembly

1) Receiving RF module
2) External programming port
3) Secondary power AC fuse (0.50A)
4) Contact output seat (CN8)
5) Primary power AC fuse (1.0A)
6) AC power input seat (CN2)
7) Internal Antenna
8) System Status LED display*
9) External antenna port
10) ID code dip-switch
11) RF channel dip-switch
12) Contact relay LED display
13) Pushbutton #1and #2 fuse (5.0A)
14) Contact output seat (CN3)
15) MAIN contact fuse (5.0A)
16) Pushbutton #3 and #4 fuse (5.0A)
17) Pushbutton #5 and #6 fuse (5.0A)
18) Contact output seat (CN4)
19) LV & AUX fuse (5.0A)
20) Cable gland & output cable

(Fig. 16) Internal Parts Assembly

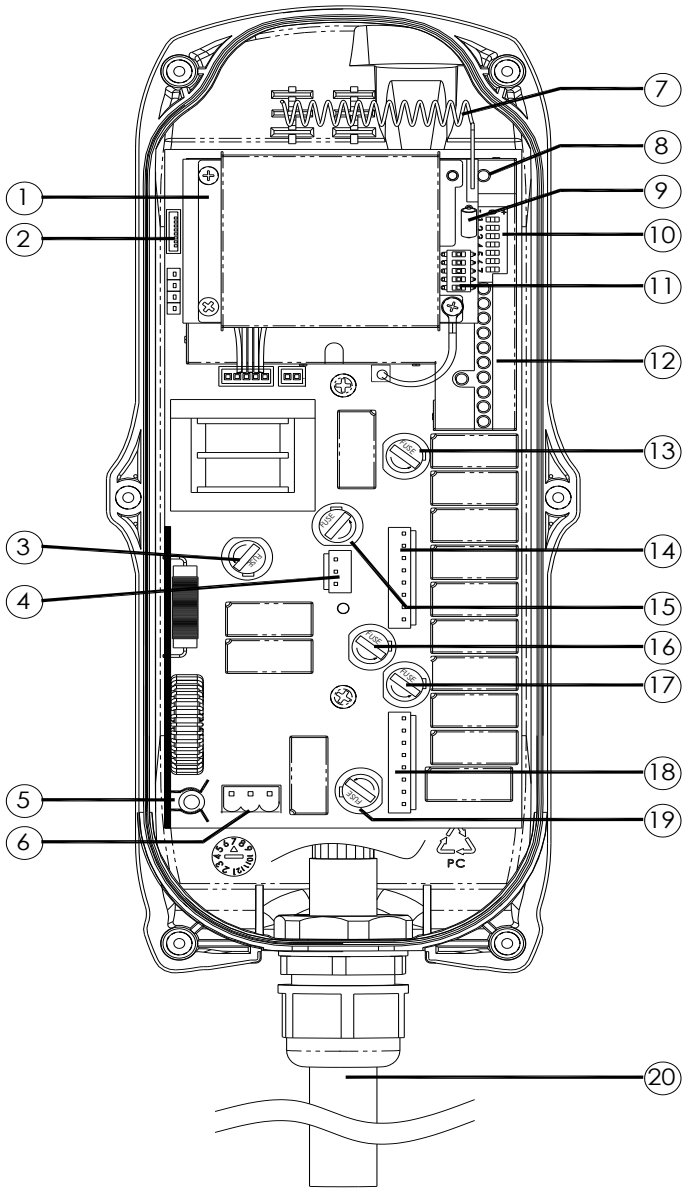

4.3 Alpha 512i

4.3.1 External Assembly

SIZE：300mm X 230mm X 86mm

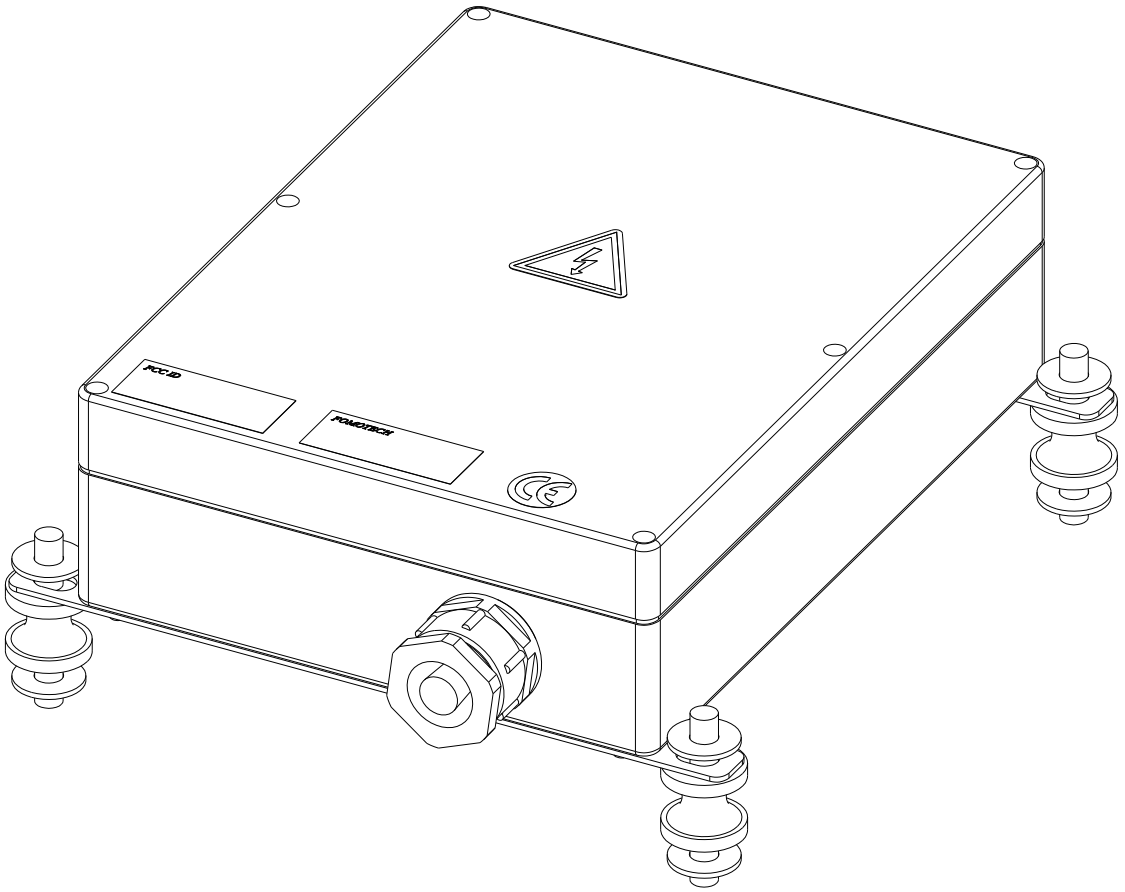

(Fig. 17) External Parts Assembly

3)	Transparent top cover	3)	Mounting bracket with shock absorbers
4)	Light-gray colored base	4)	Cable gland / Cord grip

4.3.2 Alpha 512i Internal Assembly

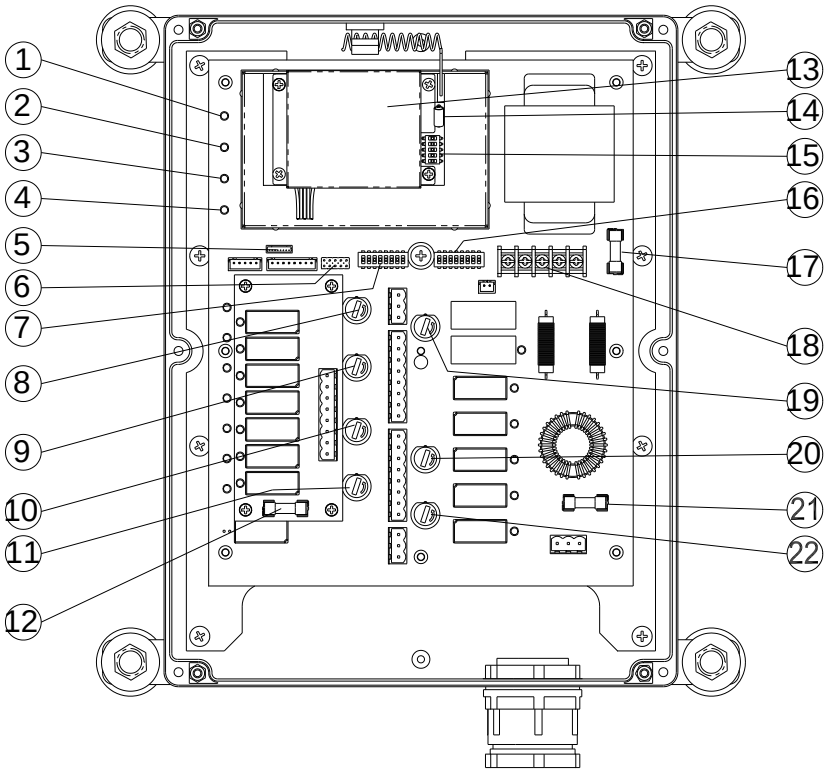

(Fig. 18) Internal Parts Assembly

1) Power LED display*
2) SQ LED display**
3) Status LED display****
4) DC power relay LED display***
5) Programming port
6) Jumper settings
7) Function dip-switch
8) Pushbutton #3 and #4 relay fuse (5.0A)
9) Pushbutton #5 and #6 relay fuse (5.0A)
10) Pushbutton A1and A2 relay fuse (5.0A)
11) Pushbutton A3 relay fuse (5.0A)
12) Pushbutton #1 and #2 relay fuse (5.0A)
13) Receiving RF module
14) External antenna port
15) RF channel dip-switch
16) ID code dip-switch
17) Secondary power fuse (0.8A)
18) Voltage selector seat
19) MAIN relay fuse (5.0A)
20) Pushbutton A4 relay fuse (5.0A)
21) Primary power fuse (1.0A)
22) Low-voltage (LV) relay fuse (5.0A)

* **POWER** ~ AC Power Source Indicator "on" → AC input power supplied.
"off" → No AC input power.

** **SQ** ~ RF Signal Indicator "on" → RF signal detected and received.
"off" → No RF signal detected or received.
Blinking at transmitter power "off" → Other radio interference.

*** **RELAY_COM** ~ DC Power Source to Relays "on" → DC power to relays.
"off" → No DC power to relays.

**** **STATUS** ~ Receiver System Status LED Display → Please refer to page 32.

5. OUTPUT CONTACT DIAGRAMS

5.1 Alpha 504i Models

(Alpha 504A)

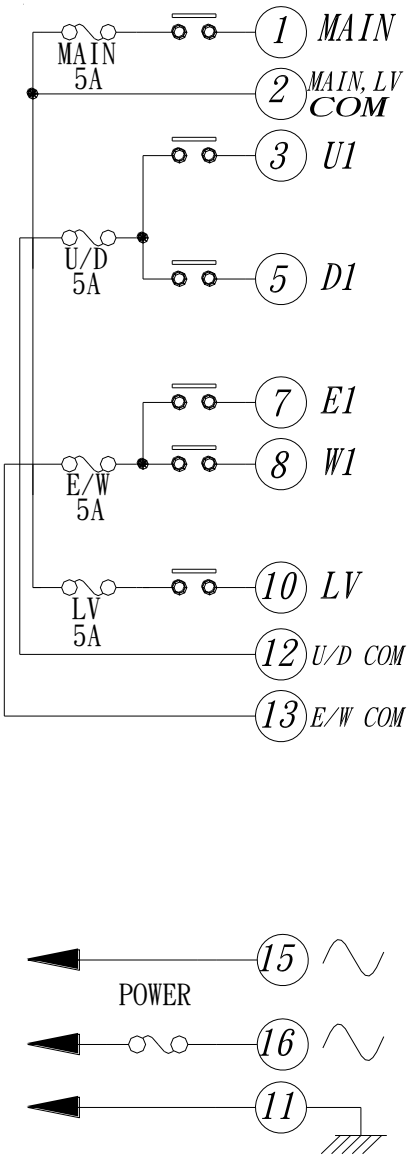

(Alpha 504B)

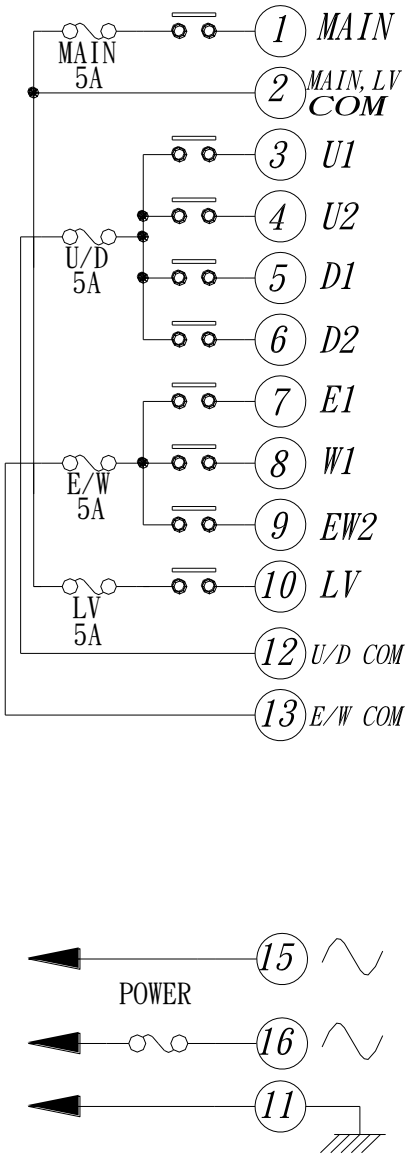

5.2 Alpha 508i Models

(Alpha 507A)

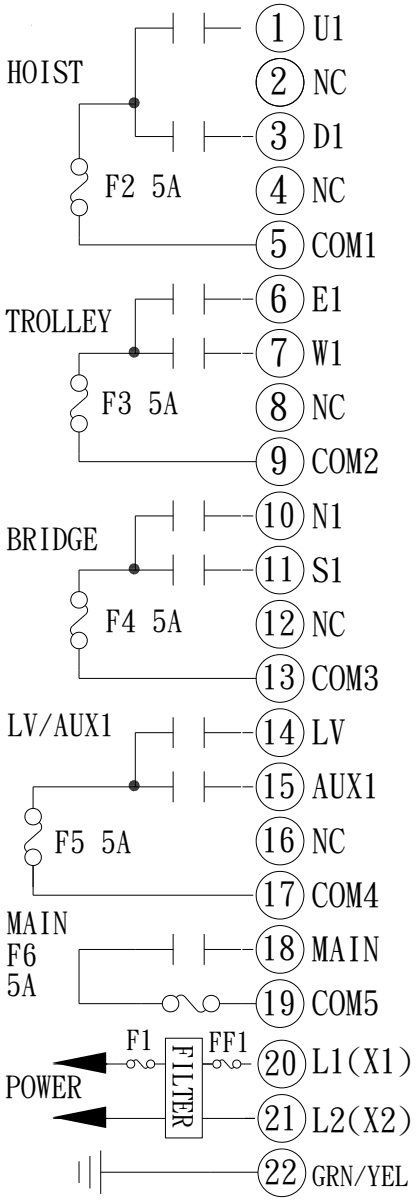

(Alpha 507B)

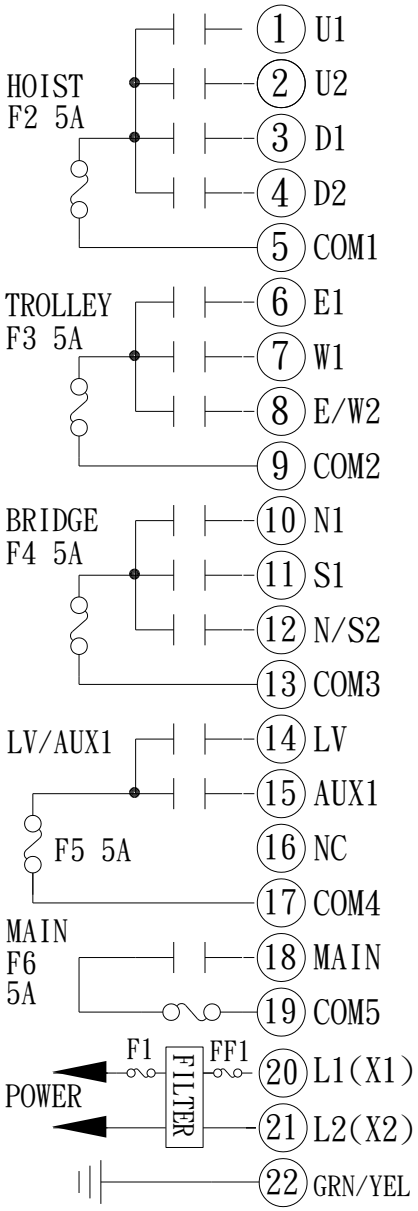

(Alpha 507AT)

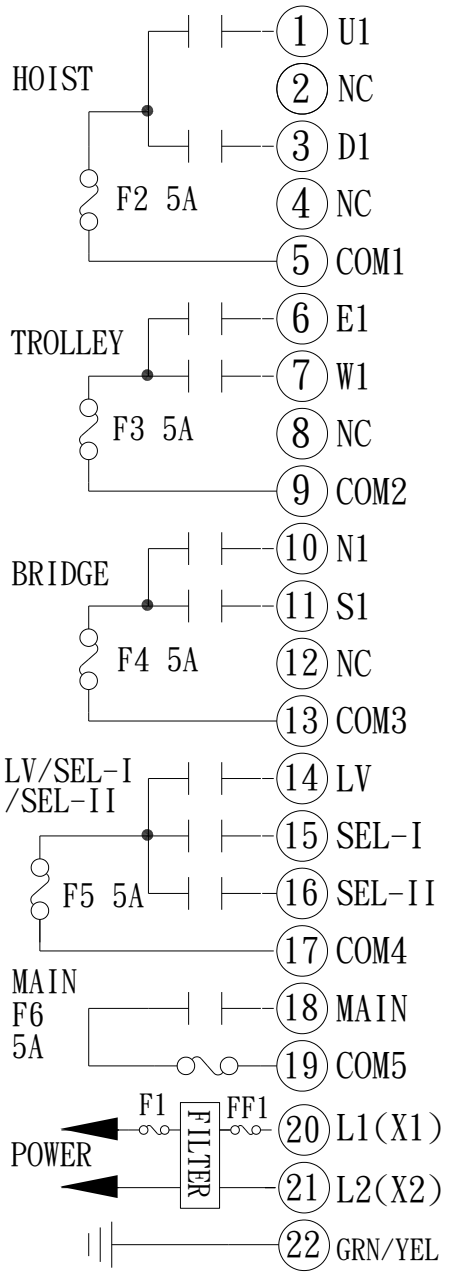

(Alpha 507BT)

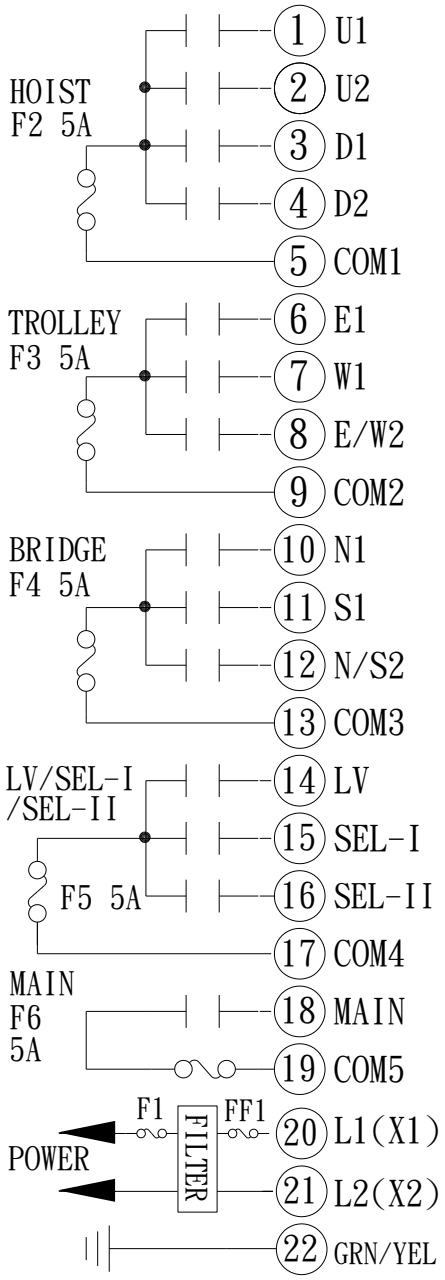

5.3 Alpha 508i Models

(Alpha 508A)

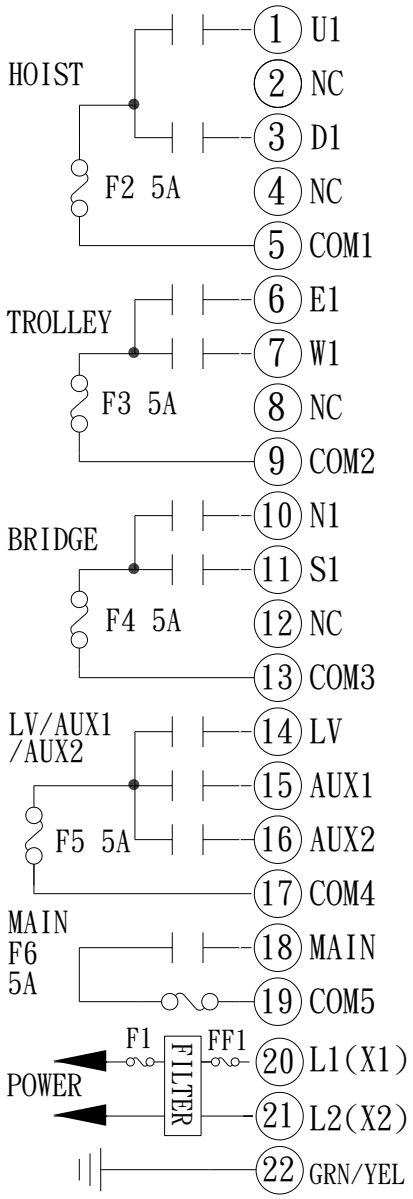

(Alpha 508B)

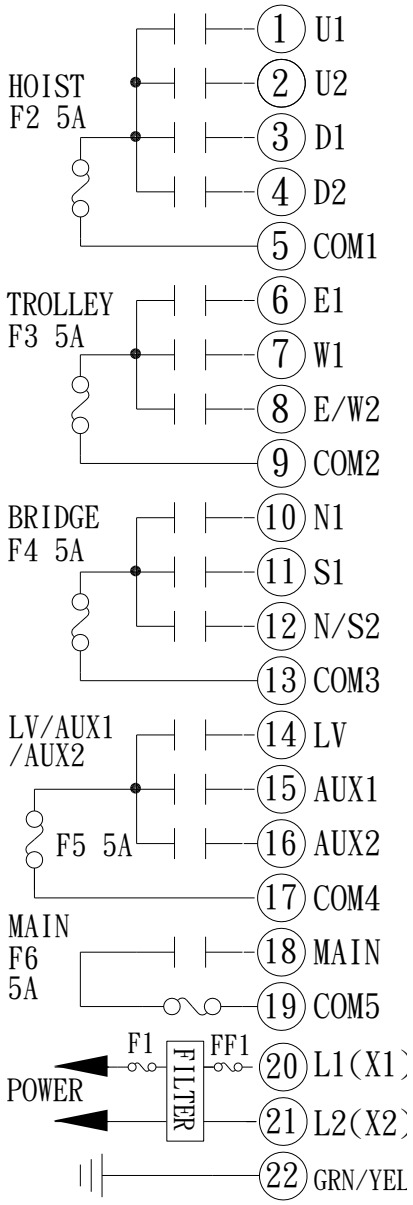

5.4 Alpha 512i Models

(Alpha 512A) – same as Alpha 580A+2

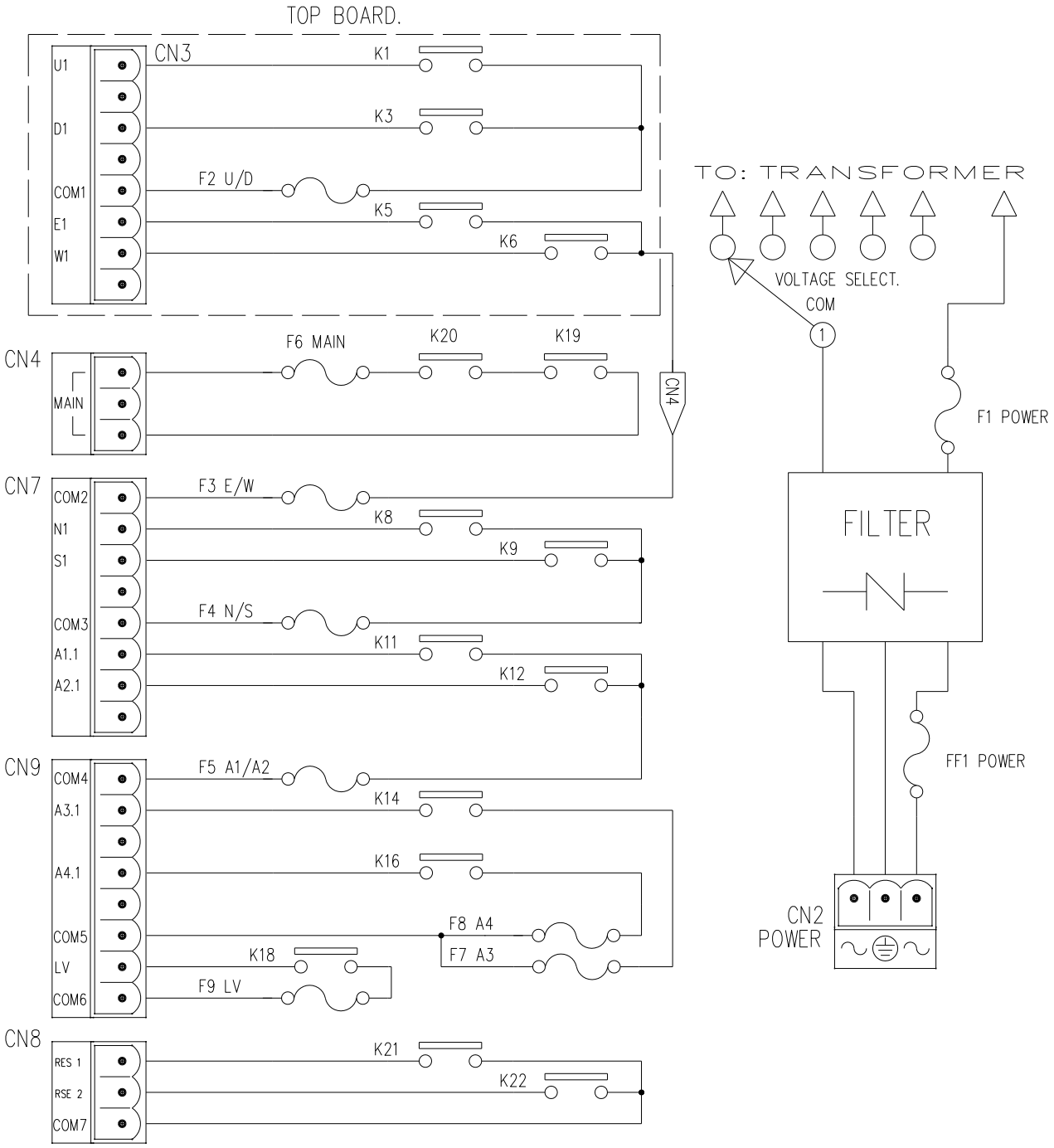

(Alpha 512B) – same as Alpha 580B+2

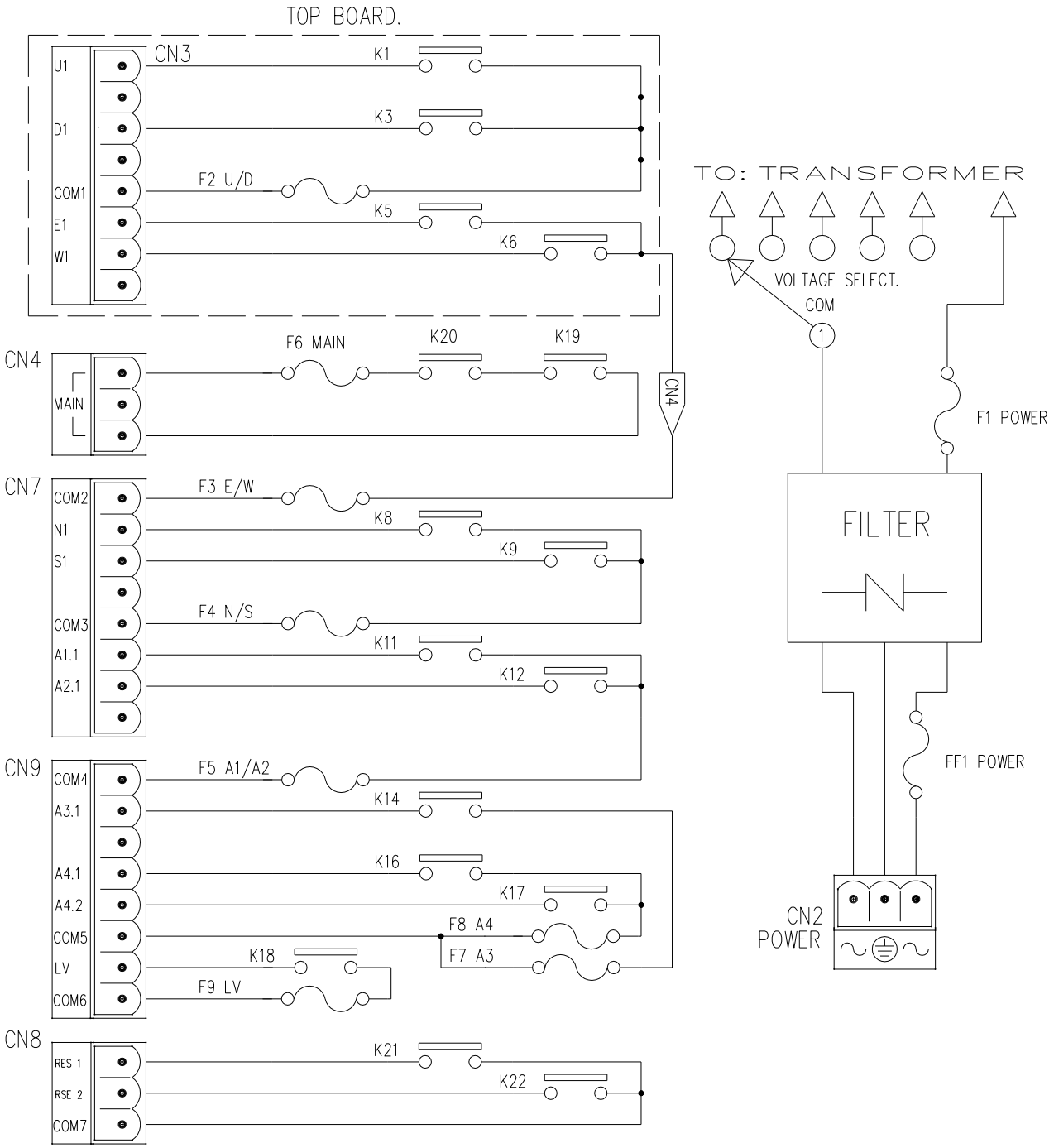

(Alpha 512C-1) – same as Alpha 580C-1+2

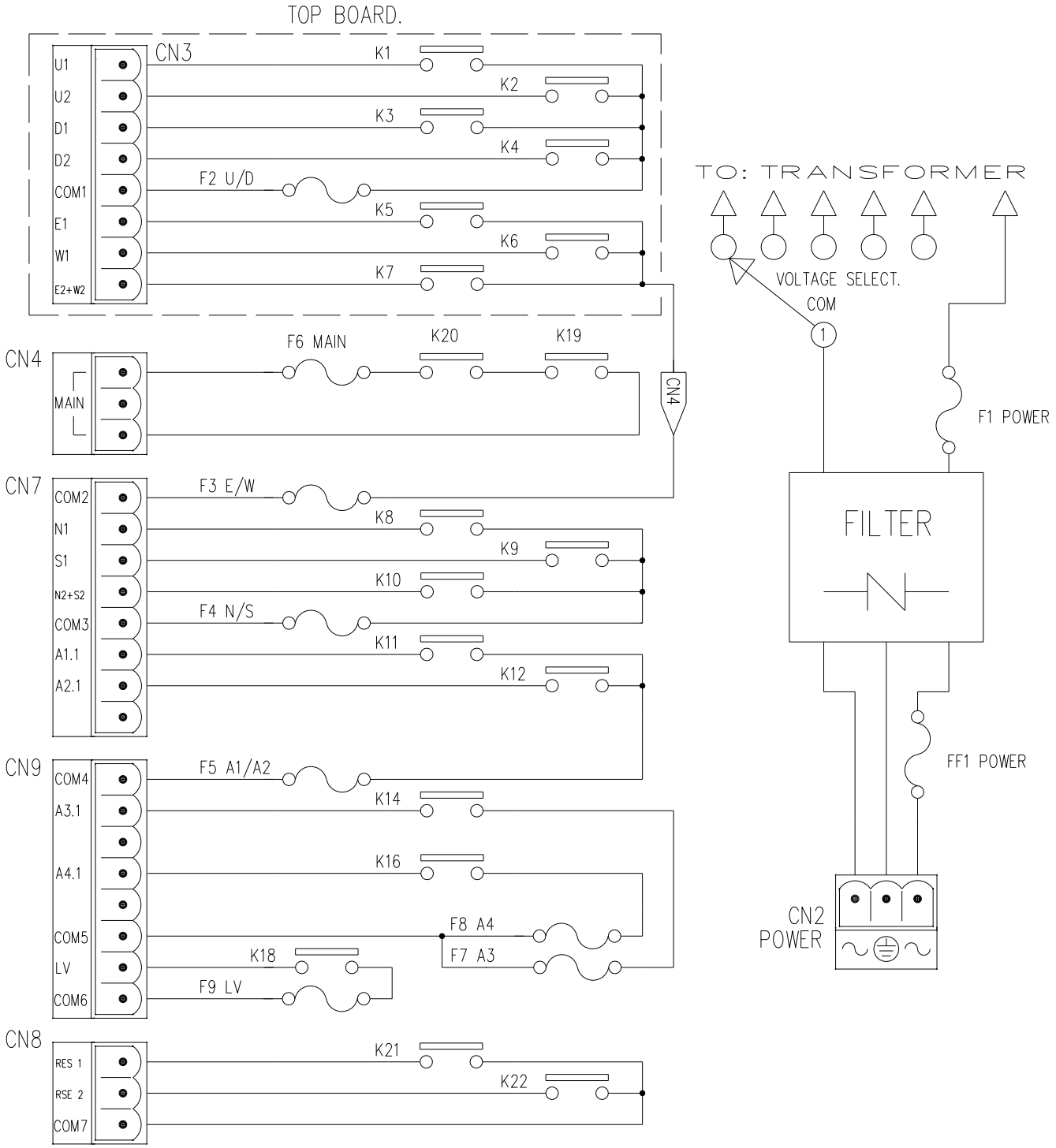

(Alpha 512C-2) – same as Alpha 580C-2+2

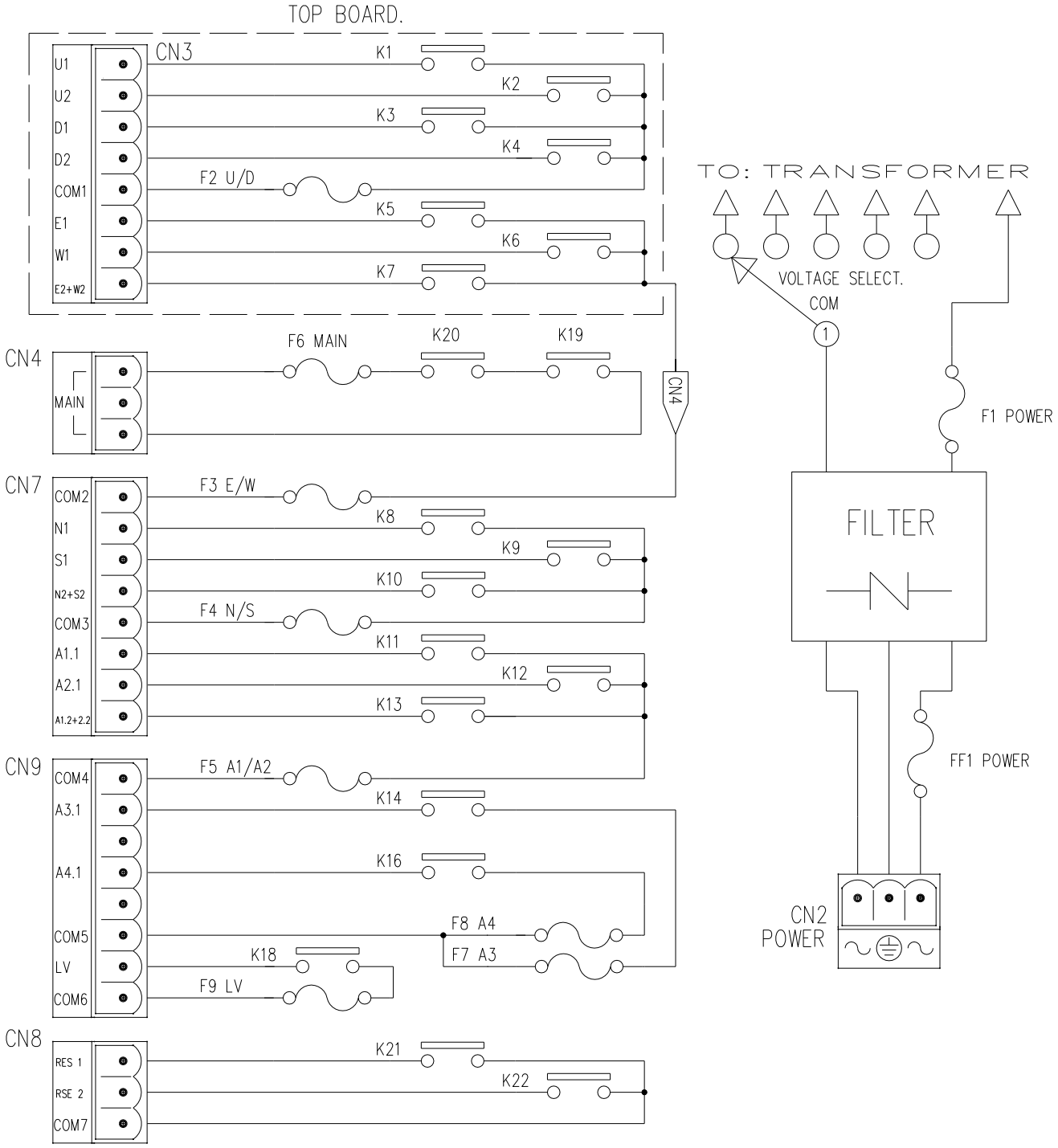

(Alpha 512D) – same as Alpha 580D+2

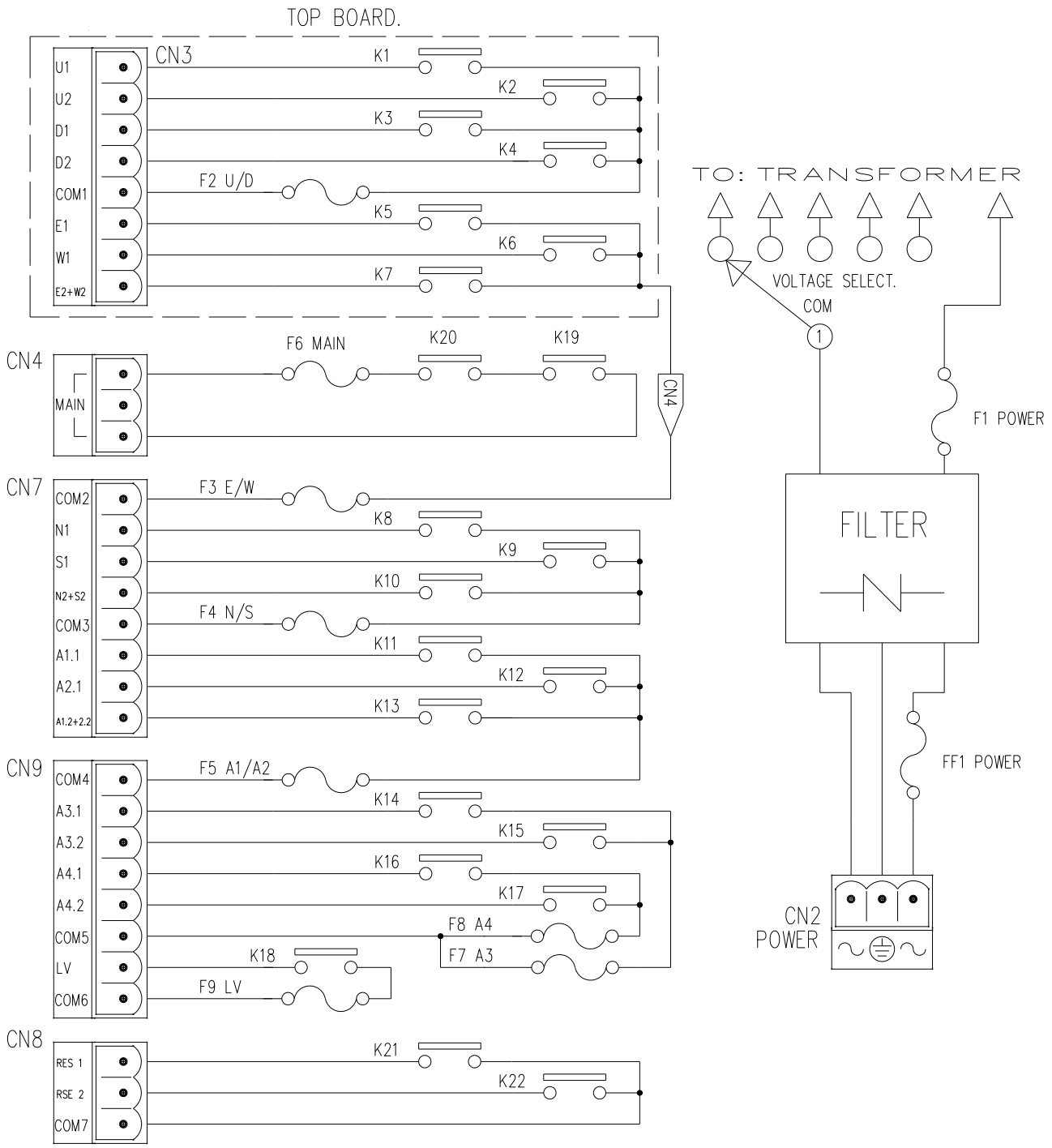

(Alpha 512E-1) – same as Alpha 580E-1+2

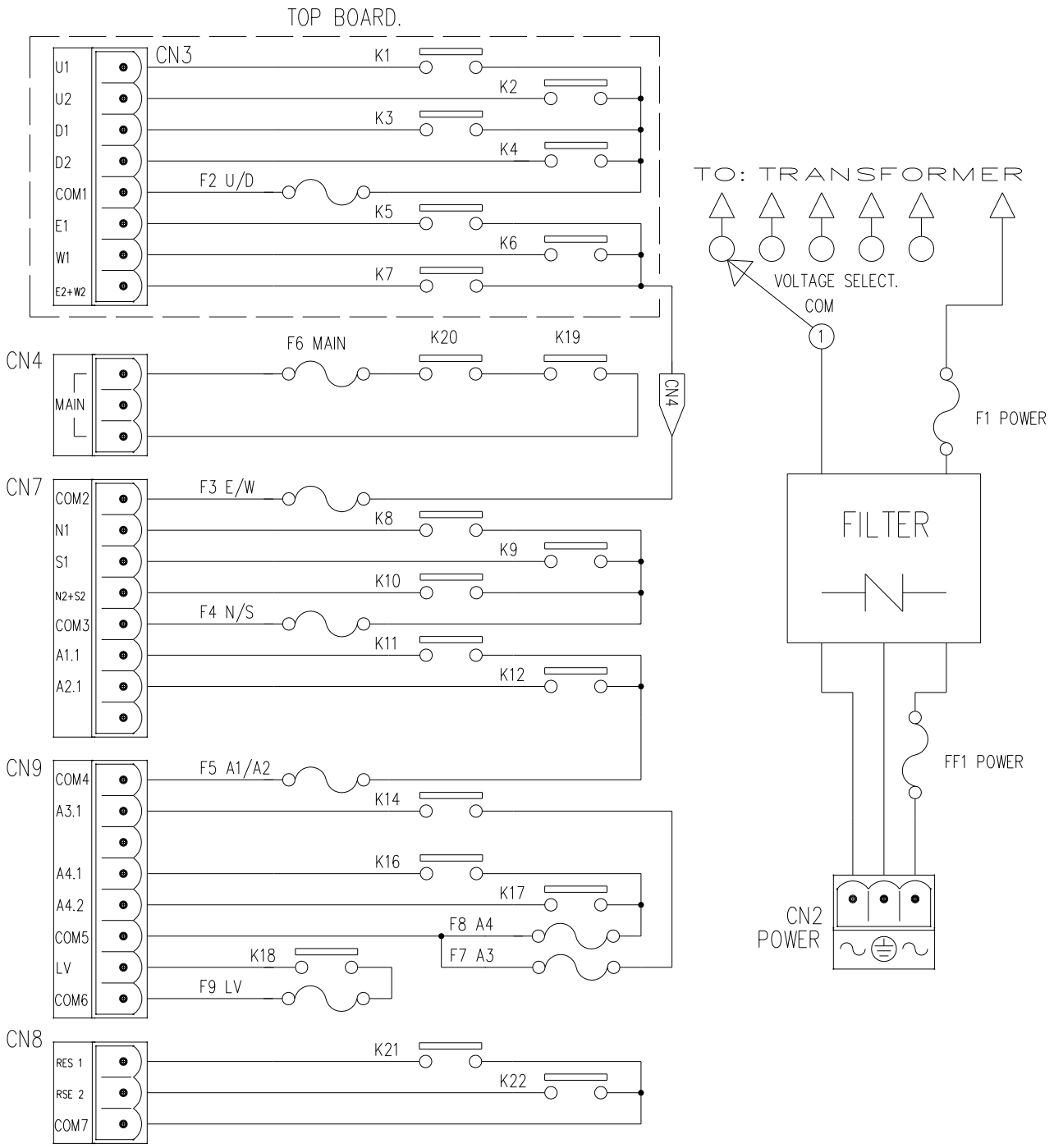

(Alpha 512E-2) – same as Alpha 580E-2+2

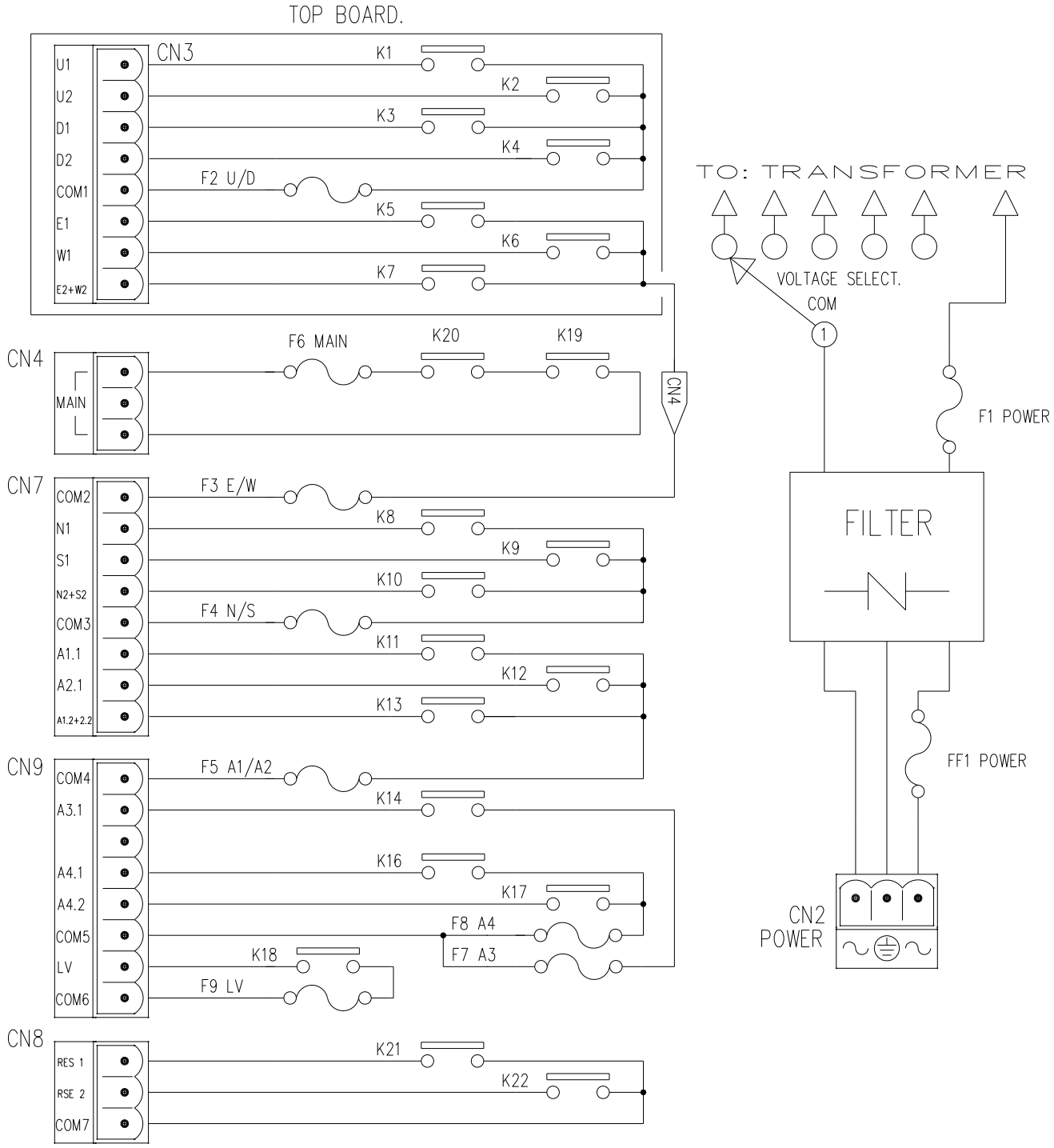

6. TRANSMITTER SETTINGS

6.1 How to Set ID Codes

6.1.1 Set by programming tool

6.1.2 Set by encoder board JP1, 1st / 2nd pin and dip-switch

Setting Steps:

(1) Rotate the transmitter power to OFF position

(2) Disassemble shock-absorbing rubber

(3) Put the transmitter pushbutton downward and disassemble transmitter bottom casing.

(4) Set ID code with dip-switch and put short boot on 1st / 2nd pin of JP1.

(5) Make sure the batteries are installed properly.

(6) Rotate the transmitter power switch to ON position.

(7) Green status LED ON for 0.1 sec, OFF for 0.1 sec, flash for 1 sec. (5 times)

(8) Green status LED steady ON indicates the setting is completed. If the LED status light is changed to red, the setting is failed. Please repeat the above setting steps until the setting is successful.

(9) After setting is completed and successful, remove short boot on 1, 2 pin of JP1.

(10) Rotate transmitter power switch to OFF position.

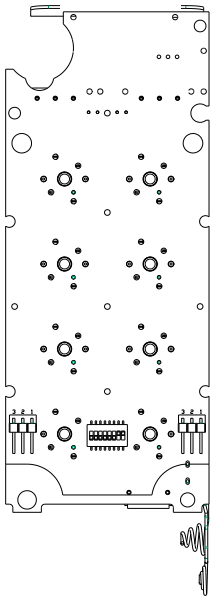

(Fig. 19) Back view

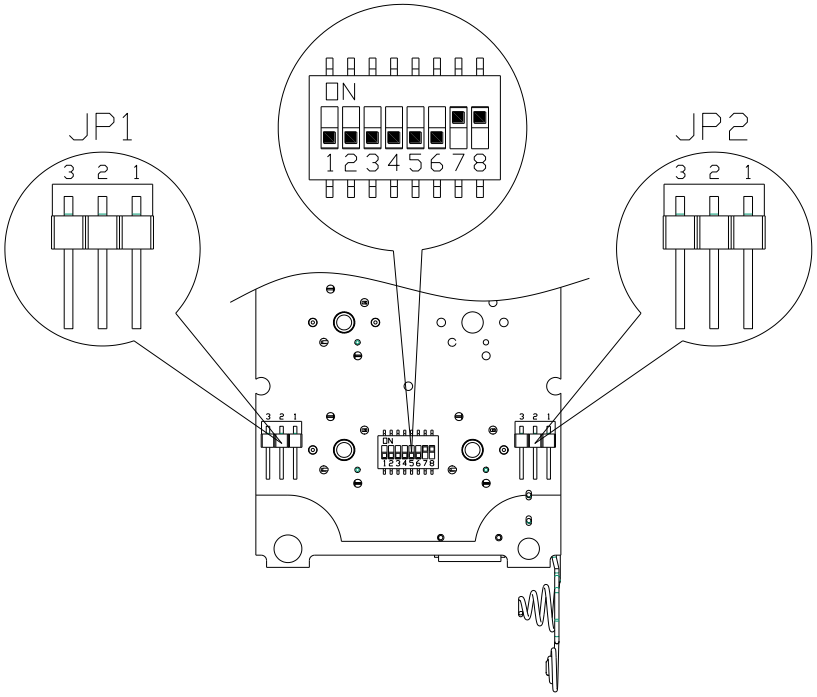

(Fig. 20) Position of dip-switch & jumpers

Top slot ON → "1"; bottom slot → "0". The setting above is 00000011.

6.2 Transmitter Channel Settings

Transmitter channel setting (select the channel you would like to operate. No exceed to channel limit)

6.2.1 Set by programming tool
6.2.2 Set by encoder board 2nd & 3rd pin of JP1 and dip-switch

When setting frequency on TX board JP1, put short boot on 2nd & 3rd pin of JP1. Change the frequency needed by changing the dip-switch setting. Repeat the previous steps to set frequency.
(Note: set the dip-switch from the 4th digit)

Example：Set channel as 03→(00000011) → Correct setting

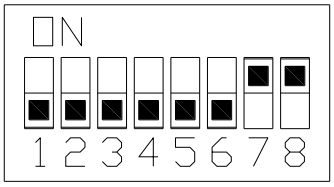

7. RECEIVER SETTINGS

7.1.1 How to Set Alpha 504i and 508i Receiver ID Code

Top slot → "1"
Bottom slot → "0"

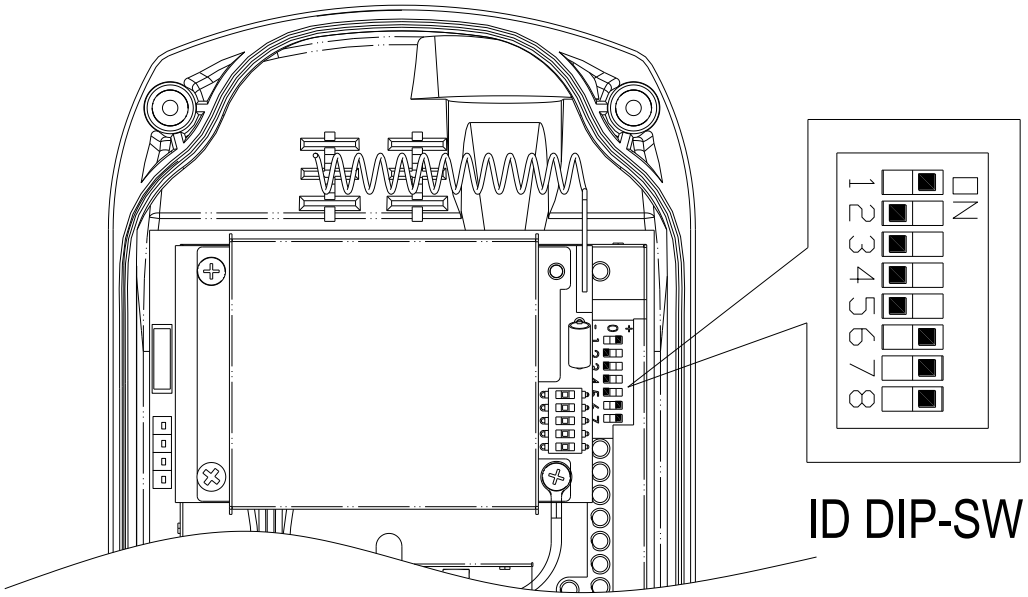

Set the ID codes needed on the decoder board dip-switch. For example: the ID codes set above → 10000111.

7.1.2 How to Set Alpha 512i Receiver ID Code

Please refer Fig. 18 receiver internal parts assembly (Page 17) for ID code 8-position dip-switch to set receiver ID code.

Top slot → "1" ; bottom slot → "0"
Set the ID codes needed on the decoder board dip-switch.
For example: the ID codes → 10010110
("1" value adds up must to be "4")

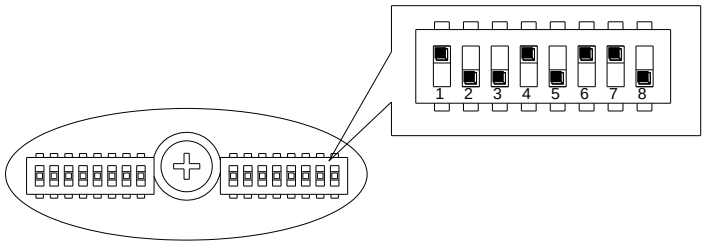

7.2 Receiver RF Channel Setting

There are 68 sets of user-adjustable receiving RF channels that can be set manually via a 8-position dip-switch located to the right of the receiving RF module. Change the receiving RF channel simply by resetting these 8-position dip-switch. For the location of the receiving RF module, please refer to fig. 15, 16, and 18 on page 12, 13, and 14.

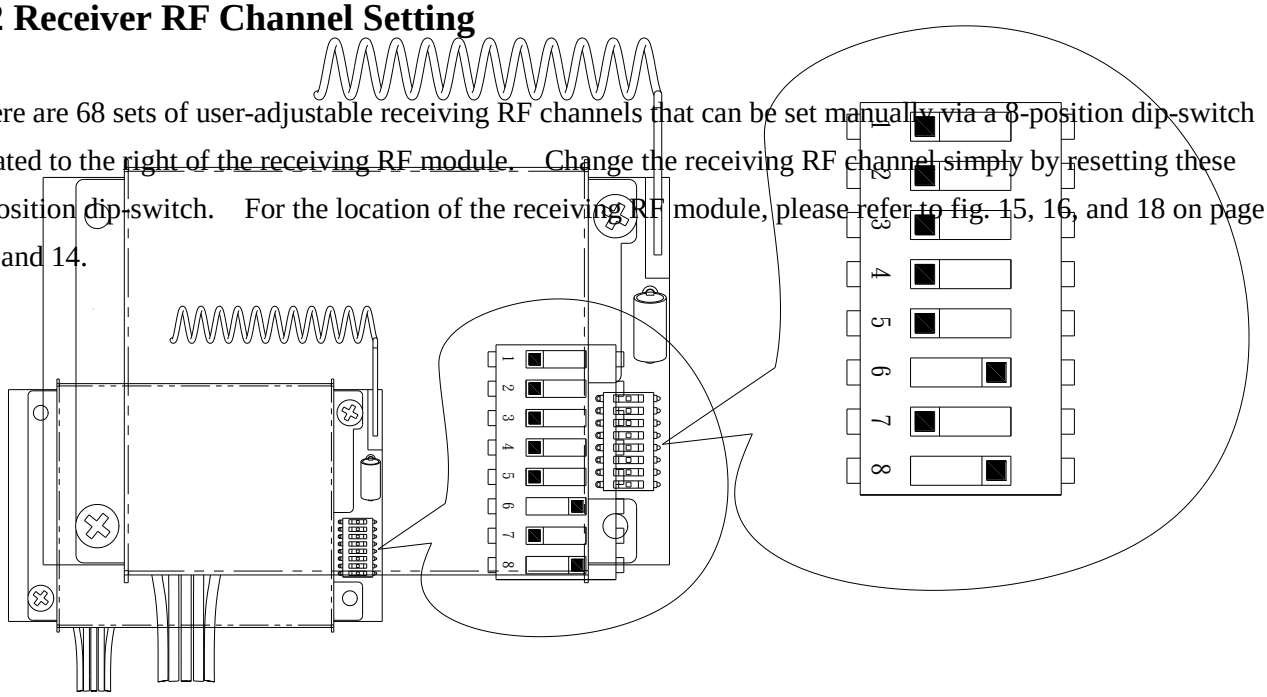

Top slot → "1" ; bottom slot → "0"
For example：the channel dip-switch set above → 00000101, channel 05.

7.3 Receiver Function Setting

7.3.1 Alpha 504i/ 508i Receiver Function Setting

7.3.1.1 Set by programming tool
7.3.1.2. Adjust Jumper setting function by decoder board

Receiver function setting:

A. Select any pushbutton or ON/OFF power switch to start the system. The MAIN relay will be activated when system is started. (After the receiver power is started and emergency stop button is elevated)

B. The MAIN relay auto shutdown time can be set as 3 minutes or depends on customer's single request. (Remark 1)

C. When transmitter voltage is low, relays for the receiver MAIN and LV (Remark 1) will be auto shutdown after one minute.

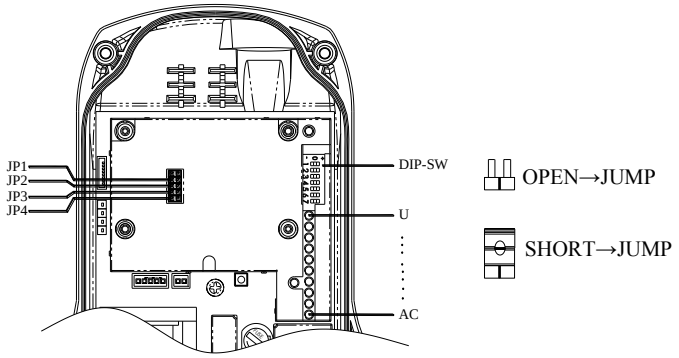

(Fig. 21) Alpha 507, 508 models

Jumper Set table: ☐ in-plant setting (default).

JP1	Open	Power key to activate relay MAIN relay (After turning "on" the transmitter power and pressing the emergency Stop button)
JP2	Open	No auto shutdown time on Main relay
	Short	The receiver MAIN will be deactivated after consecutive 5 minutes of standby time.
JP3	Open	No auto shutdown time on MAIN and LV relays
	Short	After one minute of transmitter LV, the MAIN and LV relays will be deactivated.
JP4	Open	7th AUX: "Normal" pushbutton setting
	Short	7th AUX: "Toggle" pushbutton setting

※ *Open → no Jumper* *Short → put Jumper*

Remark 1：The setting of auto shutdown time can be done by manufacturer or distributor. Setting range: 0~30 minutes. (In-plant setting: 5 minutes)

Remark 2：When the transmitter voltage is low, LV relay will be activated and siren or lights will be ON. (one second of interval)

Remark 3：Every time when you change jumper settings you must first turn the receiver power off and then turn it back on so that the new settings can be stored in memory.

7.3.2 Alpha 512i Receiver Function Setting

7.3.2.1 Set by programming tool

7.3.2.2. Adjust Jumper setting function by decoder board

Receiver function setting:

Jumper Set table: ☐ In-plant setting (default).

JP1	Open	Power key to activate relay MAIN relay (After turning "on" the transmitter power and pressing the emergency stop button)
JP2	Open	No auto shutdown time on Main relay
	Short	The receiver MAIN will be deactivated after consecutive 5 minutes of standby time.
JP3	Open	No auto shutdown time on MAIN and LV relays
	Short	After one minute of transmitter LV, the MAIN and LV relays will be deactivated.

※ *Open → No jumper* *Short → Put Jumper*

Remark 1：The setting of auto shutdown time can be done by manufacturer or distributor. Setting range: 0~30 minutes. (In-plant setting: 5 minutes)

Remark 2：When the transmitter voltage is low, LV relay will be activated and siren or lights will be ON. (One second of interval)

Remark 3：Every time when you change jumper settings you must first turn the receiver power off and then turn it back on so that the new settings can be stored in memory.

7.3.3 Alpha 512i Dip-Switch Function Table

Model	Pushbutton	Dip-Switch Setting			Description
512A	1 & 2 3 & 4 5 & 6	DIP 1	→ 1	Not Interlocked	
			→ 0	Interlocked	
	7 & 8	DIP 2	→ 1	Not Interlocked	
			→ 0	Interlocked	
	7 & 8	DIP 3	→ 1	Latching/toggle relay contact	DIP2 Set at “1”
			→ 0	Momentary relay contact	
	9 & 10	DIP 4	→ 1	Not Interlocked	
			→ 0	Interlocked	
512B	9	DIP 5	→ 1	Latching/toggle relay contact	DIP4 Set at “1”
			→ 0	Momentary relay contact	
	10	DIP 6	→ 1	Latching/toggle relay contact	DIP4 Set at “1”
			→ 0	Momentary relay contact	
512B	7 & 8	DIP 1	→ 1	Not Interlocked	
			→ 0	Interlocked	
	7	DIP 2	→ 1	Latching/toggle relay contact	
			→ 0	Momentary relay contact	DIP4 Set at “1”
	8	DIP 3	→ 1	Latching/toggle relay contact	DIP4 Set at “1”
			→ 0	Momentary relay contact	
	9	DIP 4	→ 1	Latching/toggle relay contact	
			→ 0	Momentary relay contact	
512C	1 & 2 (2nd speed)	DIP 1	→ 1	Both 1st and 2nd speed contact relay interlocked when pressed to 2nd speed	Both 1st and 2nd speed contact relays activated
			→ 0	Both 1st and 2nd speed contact relay activated when pressed to 2nd speed	Only 2nd speed contact relay activated
	9	DIP 2,3	→ 00	Momentary relay contact	

		DIP 2,3	→ 01	Latching/toggle relay contact	
		DIP 2,3	→ 10	Activate the 3rd speed	
	10	DIP 4	→ 1	Latching/toggle relay contact	
			→ 0	Momentary relay contact	
512D	1 & 2 (2nd speed)	DIP 1	→ 1	Both 1st and 2nd speed contact relay interlocked when pressed to 2nd speed	Both 1st and 2nd speed contact relays activated
			→ 0	Both 1st and 2nd speed contact relay activated when pressed to 2nd speed	Only 2nd speed contact relay activated
	---	DIP 2,3,4	→0	Momentary relay contact	DIP2&3 Must set to "0" all the time (In-plant set at "0")
512E	1 & 2 (2nd speed)	DIP 1	→ 1	Both 1st and 2nd speed contact relay interlocked when pressed to 2nd speed	Both 1st and 2nd speed contact relays activated
			→ 0	Both 1st and 2nd speed contact relay activated when pressed to 2nd speed	Only 2nd speed contact relay activated
	7 & 8	DIP 2	→ 1	Not Interlocked	
			→ 0	Interlocked	
	7	DIP 3	→ 1	Latching/toggle relay contact	DIP2 Set at "1"
			→ 0	Momentary relay contact	
512 A/B/C/D/E	11	DIP 7	→ 1	Latching/toggle relay contact	
			→ 0	Momentary relay contact	
	12	DIP 8	→ 1	Latching/toggle relay contact	
			→ 0	Momentary relay contact	

※ In-plant all set at "0"

7.4 Frequency (RF) Channels Table

Band 301MHz	Dip-Switch Setting	Channel
301.1050 MHz	00000001	01
301.1300 MHz	00000010	02
301.1550 MHz	00000011	03
301.1800 MHz	00000100	04
301.2050 MHz	00000101	05
301.2300 MHz	00000110	06
301.2550 MHz	00000111	07
301.2800 MHz	00001000	08
301.3050 MHz	00001001	09
301.3300 MHz	00001010	10
301.3550 MHz	00001011	11
301.3800 MHz	00001100	12
301.4050 MHz	00001101	13
301.4300 MHz	00001110	14
301.4550 MHz	00001111	15
301.4800 MHz	00010000	16
301.5050 MHz	00010001	17
301.5300 MHz	00010010	18
301.5550 MHz	00010011	19
301.5800 MHz	00010100	20
301.6050 MHz	00010101	21
301.6300 MHz	00010110	22
301.6550 MHz	00010111	23
301.6800 MHz	00011000	24
301.7050 MHz	00011001	25
301.7300 MHz	00011010	26
301.7550 MHz	00011011	27
301.7800 MHz	00011100	28
301.8050 MHz	00011101	29
301.8300 MHz	00011110	30
301.8550 MHz	00011111	31
301.8800 MHz	00100000	32
301.9050 MHz	00100001	33
301.9300 MHz	00100010	34

Band 301MHz	Dip-Switch Setting	Channel
301.9550 MHz	00100011	35
301.9800 MHz	00100100	36
302.0050 MHz	00100101	37
302.0300 MHz	00100110	38
302.0550 MHz	00100111	39
302.0800 MHz	00101000	40
302.1050 MHz	00101001	41
302.1300 MHz	00101010	42
302.1550 MHz	00101011	43
302.1800 MHz	00101100	44
302.2050 MHz	00101101	45
302.2300 MHz	00101110	46
302.2550 MHz	00101111	47
302.2800 MHz	00110000	48
302.3050 MHz	00110001	49
302.3300 MHz	00110010	50
302.3550 MHz	00110011	51
302.3800 MHz	00110100	52
302.4050 MHz	00110101	53
302.4300 MHz	00110110	54
302.4550 MHz	00110111	55
302.4800 MHz	00111000	56
302.5050 MHz	00111001	57
302.5300 MHz	00111010	58
302.5550 MHz	00111011	59
302.5800 MHz	00111100	60
302.6050 MHz	00111101	61
302.6300 MHz	00111110	62
302.6550 MHz	00111111	63
302.6800 MHz	01000000	64
302.7050 MHz	01000001	65
302.7300 MHz	01000010	66
302.7550 MHz	01000011	67
302.7800 MHz	01000100	68

8. TRANSMITTER OPERATION & STATUS LIGHT

8.1 Transmitter Operating Steps

1. Make sure the two "AA" alkaline batteries are installed correctly and battery voltage > 2.2V.

2. **Status lights:** To operate the transmitter, please rotate the power key on the top-left corner clockwise to "on" position. The status LED (green and red) will be steady "on" for 2 seconds and then "off". If the transmitter Status LED displays a red blinking light that is "on" → 0.1 second and "off" → 1.9 seconds, this indicates that the two "AA" batteries in the transmitter must be replaced.
   If the transmitter Status LED is blinking red, "on" → 1.9 seconds and "off" → 0.1 second, it means that the transmitter handset is locked due to a damaged or closed pushbutton contact. Also possibly the operator is pressing a pushbutton while going through the start-up sequence. This important safety feature is designed to prevent any unexpected crane movement at system startup caused by closed or defective pushbutton contacts.

3. **EMS & Restarting** _ In case of an emergency, pressing down the red EMS button will send the "Stop" command which will immediately deactivates the receiver MAIN relay. When the red EMS button is pressed, the transmitter Status LED will display a blinking red light that is "on" → 0.5 second and "off" → 0.5 second, telling the operator that the "Stop" command is being sent to the receiver. On the other hand, turning the transmitter power key "off" will also deactivate the receiver MAIN relay, but this method of MAIN relay deactivation is not recommended in an emergency situation. For added safety, always use the red EMS button in time of an emergency.
   To reactivate the receiver MAIN relay after pressing down the red EMS button, first elevate the red EMS button, turn the transmitter power key "off", wait for 3 seconds until the red blinks disappeared from the Status LED and then turn the power key back "on" again.

4. **Shutting Off the Transmitter** _ To disconnect the transmitter power just turn the power key "off". When the power key is turned "off" the receiver MAIN relay will also be deactivated.

5. The operating temperature is -10℃~ +50℃(±10℃). Do not operate the transmitter in high temperature. When operating temperature is > 50℃±10℃, the transmitter power will be "off" and the receiver MAIN relay will also be deactivated.

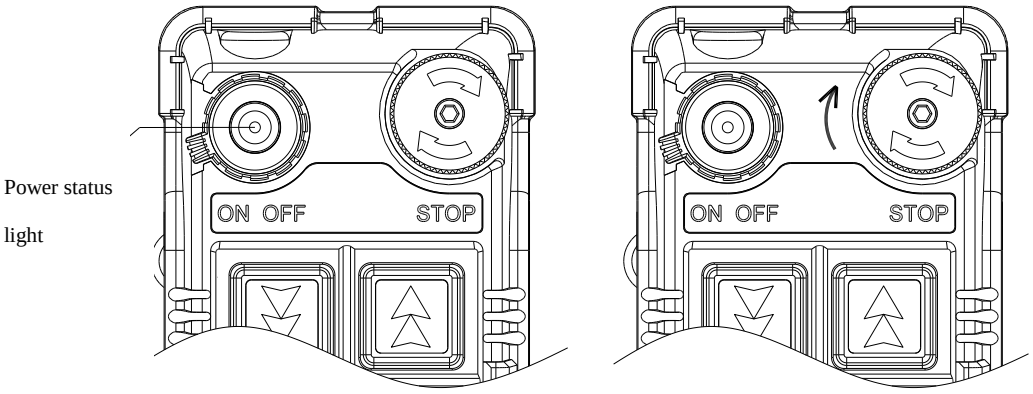

STOP: press → lock (emergency stop)

STOP: Elevate clockwise → reset (Turn on the transmitter at any time)

8.2 Transmitter Status Light

Type	Status	Solution	LED Indication
1	Power on when voltage is low	BATT<2.2V	Red light flash ON_0.1/OFF_1.9 sec (until power off)
2	Setting failed or invalided	Set data by using JUMPER & dip-switch without following rules	Red light ON_0.1/OFF_0.1 sec
3	Setting completed	JP1 or JP2 inserted	Green light ON until power off.
4	EEPROM ID error	EEPROM ID code does not match CPU	Red light ON until power off
5	RF module abnormal	PLL UNLOCK	Red light ON_0.1/OFF_0.1 sec
6	ID even number error	Setting error	Red light ON_1/OFF_1 sec
7	Pushbutton locked	Power on pushbutton connected	Red light ON_1.9/OFF_0.1 sec (until power off)
8	Normal power on	BATT>=2.2V and all the pushbuttons are not depressed	All the lights ON_2 sec
9	STOP status	STOP button is pressed	MODE 0: Red light ON_0.5/ OFF_ 0.5sec, flash 30sec. MODE 1: all the lights OFF
10	Low voltage during operation	BATT<2.2V and press pushbutton	Red light flash ON_0.1/OFF_1.9sec
11	Normal operation	Press pushbutton	Green light flash ON_0.1/OFF_1.9 sec

9. RECEIVER INSTALLATION

9.1. Preparation for Installation

1. Required Tools for Receiver Installation:

   (1) Flat Head Screwdriver (-)
   (2) Phillips Head Screwdriver (+)
   (3) Multi-Meter
   (4) 14mm Wrench x 2
   (5) Power Drill with φ 10.5mm Drill-Bit

2. Check to ensure that your receiver is not set to the same RF channel and ID code as any other systems in operation at the same facility or within 300-meter distance.
3. Prior to installation, make sure that the crane or equipment itself is working properly.
4. Use a multi-meter to check the voltage source available and ensure the receiver voltage setting matches your power source.
5. Prior to installation, switch off the main power source to the crane or equipment.

9.2 Step by Step Installation

1. For better reception, the location selected should have the antenna visible from all areas where the transmitter is to be used.
2. The location selected should not be exposed to high levels of electrical noise. Mounting the receiver next to an unshielded variable frequency control (inverter) may cause minor interference. Always locate the receiver unit as far away from inverter controls as possible.
3. Ensure the selected location has adequate space to accommodate the receiver enclosure.
4. Make sure the receiver unit is in upright position (vertical).
5. The distance between the antenna and the control panel should be as far apart as possible (refer to the fig.22 on page 40).
6. If a crane or equipment's runway is longer than 100 meters, an external antenna should be added. The Alpha 504i/508i receiver housing has provisions for an external factory installed antenna available as an option, contact your dealer for price and delivery.
7. Drill a hole on the control panel (10.5mm).
8. Tightened the bolt nuts provided.
9. If the control panel has a plastic surface, extended grounding wire should be used.
10. For system wiring, please refer to the output contact diagrams from page 2.
11. Ensure all wiring is correct and safely secured and all screws are fastened.

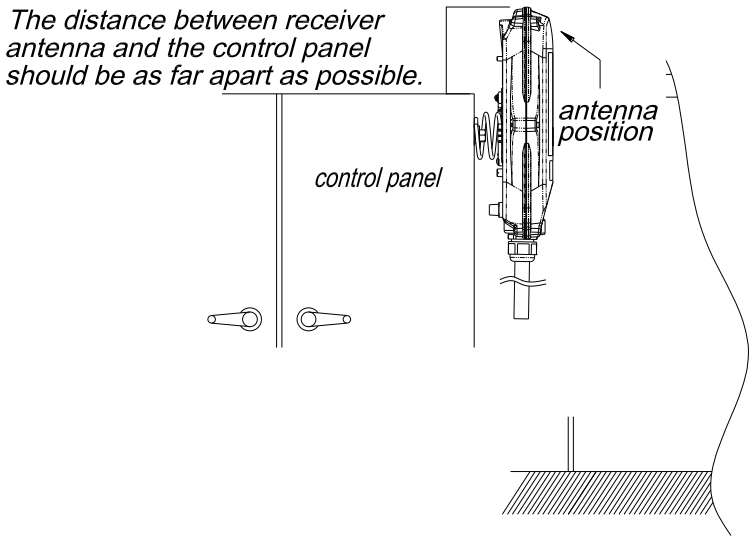

(Fig. 22) Alpha 504i and Alpha 508i

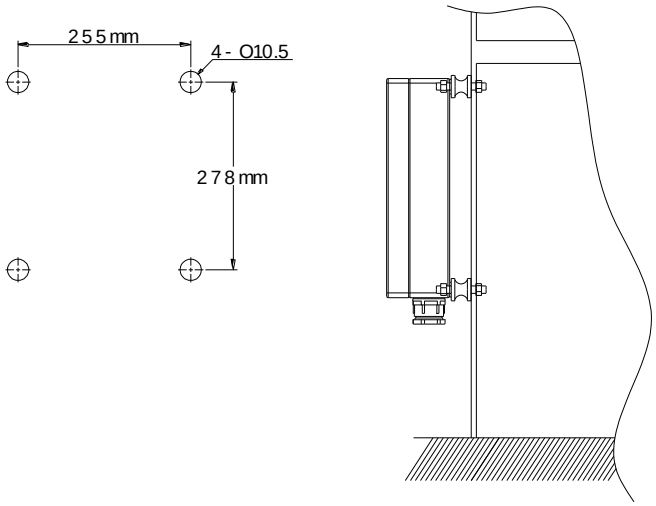

(Fig. 23) Alpha 512i

9.3 System Testing

1. Connect the power source to the receiver and test the MAIN relay output by pressing the red emergency stop button (EMS) and observe that it properly opens and closes the main line disconnect contactor.
2. Test the operation of each function to ensure it corresponds to the transmitter direction labels and/or the pendant it is replacing.
3. Test the limit switches on the hoist and/or crane and verify they are working properly.
4. If your new remote control is replacing an existing pendant, make sure it is completely disconnected to prevent unwanted control commands, i.e. snick circuits.
5. If your new remote control is replacing an existing pendant make sure it is stored in a safe location where it will not interfere with remote operation (get torn off).

9.4 Receiver system Status LED Display

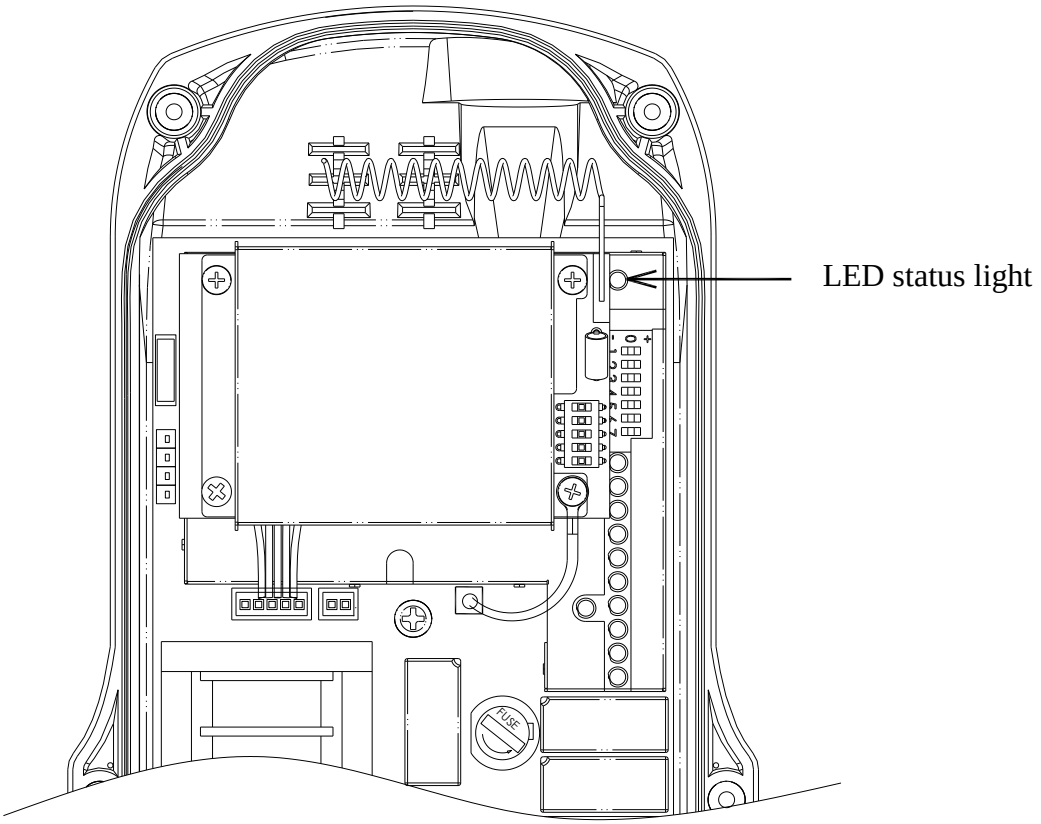

Receiver system Status LED Display

Type	Led Indication	Problem and Solution
1	Constant red light.	EEPROM error – reprogramming required.
		Incorrect receiver ID code setting (see note below).
2	ON → 1.0 second OFF → 1.0 second	ID code not matched on both the transmitter and receiver unit, please readjust accordingly.
3	Dim or no light.	Under-voltage, check the main power-supply.
4	ON → 2.0 seconds OFF → 0.1 second	MAIN contact relay jammed or defective.
5	ON → 0.1 second OFF → 2.0 seconds	System normal with transmitter pushbutton either in neutral or in transmitter power “off” position.
6	ON → 0.1 second OFF → 0.1second	System normal with transmitter pushbutton in non-neutral position (pushbutton depressed).

Note: Please refer to section 7.1 on page 31 for correct ID code setting.

9.4.1 Alpha 512i Receiver System Status LED Display

Led Indication		Reason	Solution
Power LED display	ON	Normal-voltage	
	OFF	Under-voltage	
SQ, Status LED display	ON	Transmitted signals detected and received	
	OFF	No transmitting signal detected	
	BLINK	1.Transmitter standby	Turn on the transmitter
		2.Interference	Turn off the transmitter
Relay LED display	ON	Normal operation	
	OFF	Receiver defective	Repair decoder board

10. TROUBLE SHOOTING

Should the operator find the equipment not operating normally, please check the chart below for simple trouble shooting tips.

Problem	Possible Reason	Solution
Transmitter does not communicate with the receiver.	Transmitter and the receiver are not on the same RF channel (SQ lamp not lit) or ID code.	Ensure the correct transmitter is in use. The labels on the receiver and the transmitter will identify the RF channel and ID code in use.
Transmitter does not communicate with the receiver.	Low or no transmitting power from the transmitter unit.	Turn "on" the transmitter with EMS elevated. If the status LED shows blinking red light or no light at all, then turn the power "off" and replace the two alkaline "AA" batteries.
No power to the receiver (AC power indicator on the receiver unit not lit).	Blown fuse or no input power connection.	Ensure power input to the receiver unit is correct. If the power indicator (AC) is still not lit, please check the receiver for any open fuse.
Outputs do not operate correctly.	Receiver configuration is not set properly or output wiring is incorrect.	Please refer to section 6 and 7 to ensure receiver is correctly wired and configured for your application.
Transmitter does not communicate with the receiver.	Transmitter is turned on with the EMS activated (pressed down).	Elevate the EMS first and then turn the power switch off and then on again.

11. SYSTEM SPECIFICATION

Transmitter Unit

Source Voltage	:	AA alkaline batteries 3.0V x 2
Antenna Impedance	:	Internal Antenna 50 ohms. External antenna is available.
Dimension	:	
Alpha 504i	:	140mm x 68mm x 30mm
Alpha 508i	:	189mm x 68mm x 30mm
Alpha 512i	:	235mm x 68mm x 30mm
Weight	:	
Alpha 504i	:	2,400g (include batteries)
Alpha 508i	:	3,000g (include batteries)
Alpha 512i	:	3,500 kg (include batteries)
Enclosure Rating	:	IP-66
Operating Temperature	:	-10℃ ~ +50℃ (50℃±10℃ transmitter auto shut down)
Transmitting Power Consumption	:	< 20mA @ 3.5V (Various from encoding mode and transmitting power)
Continue Operating Time	:	> Consecutive 102hrs @batteries full (2050mA), Band
LV Voltage	:	2.2V – 2.0V
Frequency Range	:	301 MHz
Transmitting Power	:	0.1Mw – 10mW
Frequency Control	:	PLL
Frequency Deviation	:	< 1ppm @ 25℃
Spurious Emission	:	< - 50dB
Emission	:	F1D
Antenna Impedance	:	50 ohms

Receiver Unit

Frequency Band	:	301 MHz
Channel Spacing	:	25KHz
Frequency Control	:	Synthesizer (PLL)
Frequency Drift	:	< 5ppm @ -20℃ ~ +70℃
Frequency Deviation	:	< 1ppm @ 25℃
Sensitivity		<-115dBm
Spurious Emission	:	- 50dB
Antenna Impedance	:	50 ohms
Responding Time		40ms (Normal)
Enclosure Rating	:	IP-66
Source Voltage	:	Alpha 504i/508i:DC12-24V, AC48,AC100V-380V @50/60Hz Alpha 512i:AC25-50V, AC110-240V, AC380-460V @50/60Hz
Power Consumption		11VA
Operating Temperature	:	-10℃ ~ +70℃
Output Contact Rating		250V @ 10A
Dimension		
Alpha 504i	:	310mm x 134mm x 72mm
Alpha 508i	:	310mm x 134mm x 72mm
Alpha 512i	:	300mm x 230mm x 86mm
Weight		
Alpha 504i	:	1,625g (include output cable)
Alpha 508i	:	2,000g (include output cable)
Alpha 512i	:	3,400g (include output cable)

12. PARTS LIST

Transmitter	Part No.
1. Encoder board (Alpha 507A)	BEN507A
Encoder board (Alpha 507B)	BEN507B
Encoder board (Alpha 507AT)	BEN507AT
Encoder board (Alpha 507BT)	BEN507BT
Encoder board (Alpha 508A)	BEN508A
Encoder board (Alpha 508B)	BEN508B
2. Transmitter enclosure (Alpha 508i)	BCT507
3. Battery cover	BC600
4. 2-step pushbutton	B50001
1-step pushbutton	B50002
5. Pushbutton rubber fixing holder	BCH508
6. Pushbutton rubber boot (Alpha 508i)	PRB02
7. Transmitter shock-absorbing rubber (Alpha 508i)	SAR02
8. Transmitter vinyl protective cover (Alpha 508i)	VPC02
9.EMS pushbutton	B50003
10. EMS red cap (all models)	EMS01
11. A600 waist strap	WS01
15. A600 pushbutton direction label	DL01

Receiver	
1. Decoder board (Alpha 507A)	BDE507A
Decoder board (Alpha 507B)	BDE507B
Decoder board (Alpha 507AT)	BDE507AT
Decoder board (Alpha 507BT)	BDE507BT
Decoder board (Alpha 508A)	BDE508A
Decoder board (Alpha 508B)	BDE508B
2. 301MHz receiver RF module (All models)	BRX301
3. Receiver enclosure (Alpha 508i)	BCR507
4. Receiver mounting spring (Alpha 508i)	RMS600
5. Regular Output Contact Relay-blue (All Models)	BDE507BT
6. Safety MAIN Contact Relay-DC12V (All Models)	BDE508A
7. Transformer (12/24VDC – Alpha 504i-508i)	T24VDC
Transformer (24VAC – Alpha 504i-508i)	T24VAC
Transformer (48VAC – Alpha 504i-508i)	T48VAC
Transformer (110/120VAC – Alpha 504i-508i)	T120VAC
Transformer (220/230VAC – Alpha 504i-508i)	T230VAC
Transformer (380VAC – Alpha 504i-508i)	T380VAC
Transformer (220/230VAC – Alpha 504i-508i)	T230VAC
8. 2-meter Output Cable with 5 Common Circuits Cable (24C*2m V3.5, Alpha 508i)	OC507
9. Optional External 301 MHz Antenna (All Models)	ANT301

USB programming parts	
1. USB programming board (All Models)	USBPCB
2. USB connecting cable (1m – All models)	USBC