Golden Technology Corporation

GBS 535-MD-01A
Wi-Fi PCB Module Datasheet

V 1.00

CONFIDEN

10F, No.58, Jhouzih St., Neihu District,
Taipei, 114, Taiwan, R.O.C.
Tel : 886-2-87510688 Fax : 886-2-87525889
http://www.gtcm2m.com

REVISION HISTORY

Version No.	Revised Date	Description
0.80	2013-07-16	Preliminary version released
0.83	2013-10-23	Pin assignment changed
0.90	2014-02-01	V 0.9 released
0.92	2014-04-30	Update alternate function of pin 17 and pin 18.
0.95	2014-07-01	Part number updated.
1.00	2014-08-13	V1.00 released.

CONFIDENTIAL

10F, No.58, Jhouzih St., Neihu District,
Taipei, 114, Taiwan, R.O.C.
Tel : 886-2-87510688 Fax : 886-2-87525889
http://www.gtcm2m.com

TABLE OF CONTENT

REVISION HISTORY 2
1. High integration of 2.4GHz IEEE 802.11 PCB Module 4
2. Application 4
3. Feature 4
4. System Block Diagram 5
5. Pin Diagram 6
6. Pin Description 6
7. Part number, Physical Dimension and the Footprint 10
8. Recommended HOST PCB Keep Out Area 11
9. External Antenna 12
10. Wi-Fi Specification 14
11. Communications Interface 18
12. Power Consumption 21
13. Electrical Specification 24
14. Recommended Reflow Profile 24
15. Storage Condition 25
16. Federal Communication Commission Interference Statement 26
17. Sales and Service 28

CONFIDENTIAL

10F, No.58, Jhouzih St., Neihu District,
Taipei, 114, Taiwan, R.O.C.
Tel : 886-2-87510688 Fax : 886-2-87525889
http://www.gtcm2m.com

1. High integration of 2.4GHz IEEE 802.11 PCB Module

The GBS 535-MD-01A series PCB modules provide the highest degree integration design for the embedded application. It incorporates a GBS 535 SiP module, a printed antenna, a iPEX connector, a crystal, a minimum number of resistors and capacitors. The high integration GBS 535 SiP module on the PCB module integrates a high performance, low power 802.11 b/g/n Wi-Fi IC , the Broadcom BCM43362 and an ARM Cortex M3 MCU, the STM32F207. The cost, easy production and low power consumption advantages allow the user to build a competitive, reliable and wireless embedded product.

2. Application

The GBS 535-MD-01A series including GBS 535-MD-01A, GBS 535-MD-01AP, GBS 535-MD-01B, GBS 535-MD-01BP, is designed for the embedded wireless application such as industrial control, vehicle system, automation control, medical instrument system, health care system and other embedded wireless applications.

3. Feature

- Single band : 2.4GHz.
- IEEE 802.11 b/g/n compliant.
- Integrate an ARM Cortex M3 MCU with on chip memory.
- Support USART/UART and SPI buses.
- Support SPI buses.
- Support ADC and CAN bus functions.
- Firmware down load through JTAG.
- External 3.3V operation voltage.
- Low power consumption.
- Hardware WAPI acceleration engine.
- Support WEP, WPA/WPA2.
- 32 pin, 28x20 mm compact board size.
- On board printed antenna.
- An optional U.FL. connector for the external antenna.
- Minimum external components to reduce design effort.
- CE/FCC certified.
- The easy to use, Smart Command is available upon request.

CONFIDENTIAL

10F, No.58, Jhouzih St., Neihu District,
Taipei, 114, Taiwan, R.O.C.
Tel : 886-2-87510688 Fax : 886-2-87525889
http://www.gtcm2m.com

4. System Block Diagram

The system block diagram of the GBS 535-MD-01A is shown in figure 4.1 and the system block diagram of GBS 535 SiP module is shown in figure 4.2. The Internal PMOS in figure 4.1 is to enable Wi-Fi power which is controlled by the GBS 535-MD-01A.

Figure 4.1 System block diagram of GBS 535-MD-01A

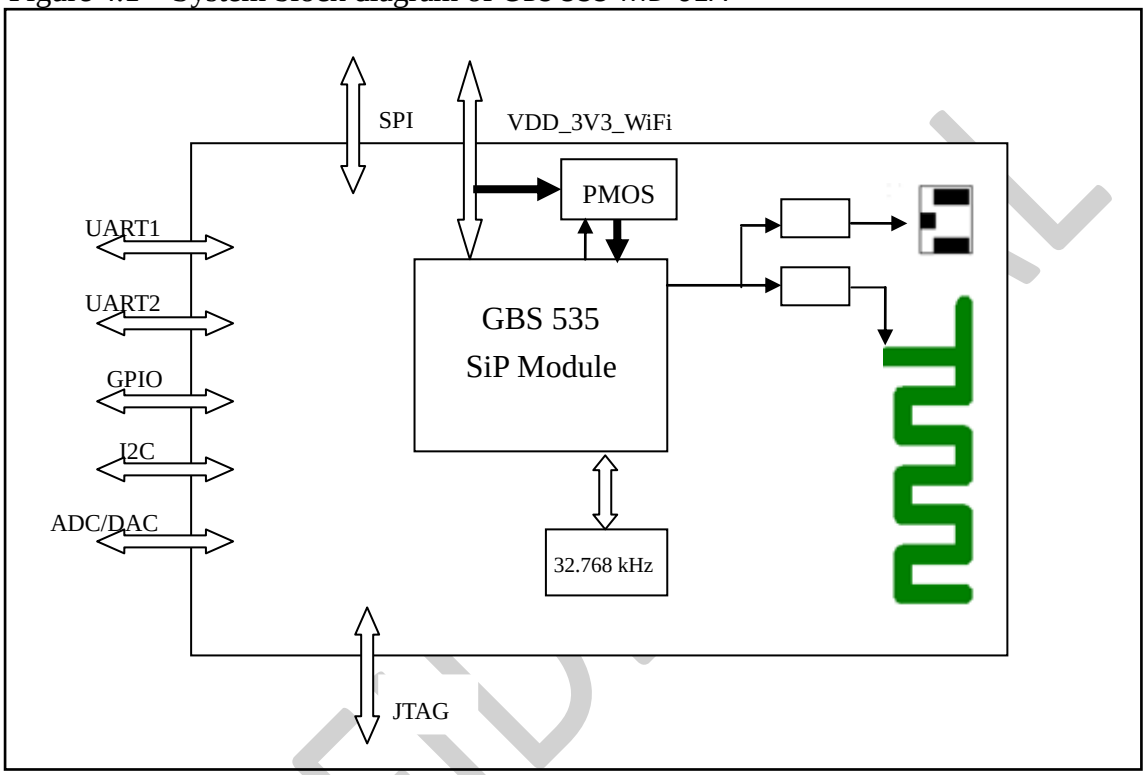

Figure 4.2 System block diagram of GBS 535 SiP module

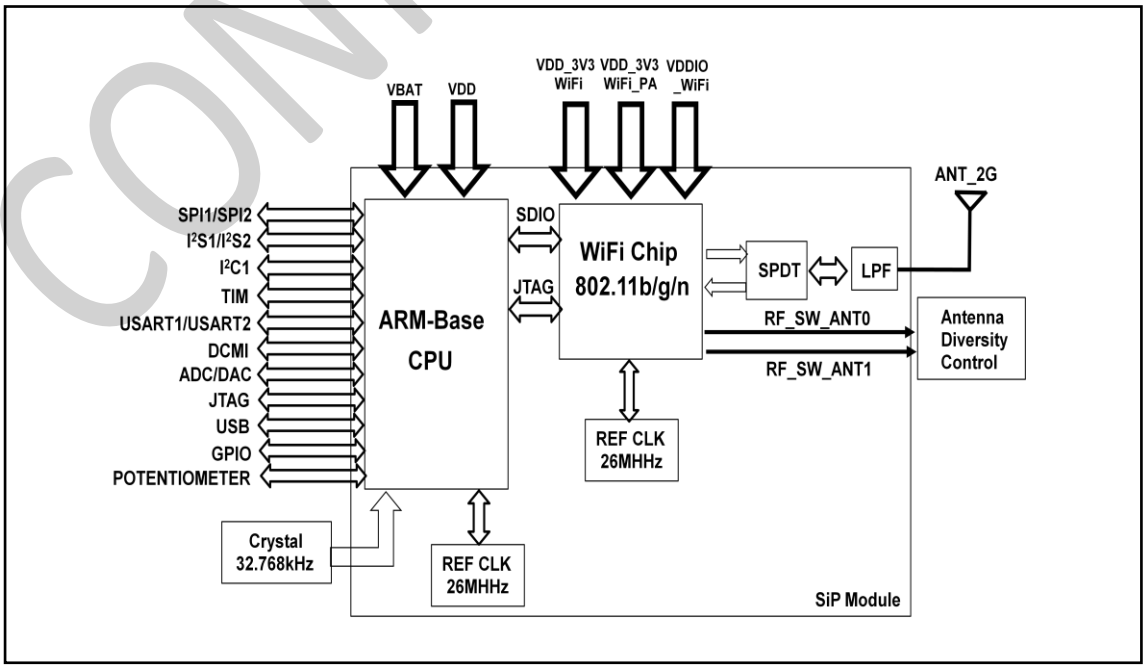

10F, No.58, Jhouzih St., Neihu District,
Taipei, 114, Taiwan, R.O.C.
Tel : 886-2-87510688 Fax : 886-2-87525889
http://www.gtcm2m.com

5. Pin Diagram

The pin diagram of the GBS 535-MD-01A is shown in figure 5.1.

Figure 5.1 The pin diagram of the GBS 535-MD-01A

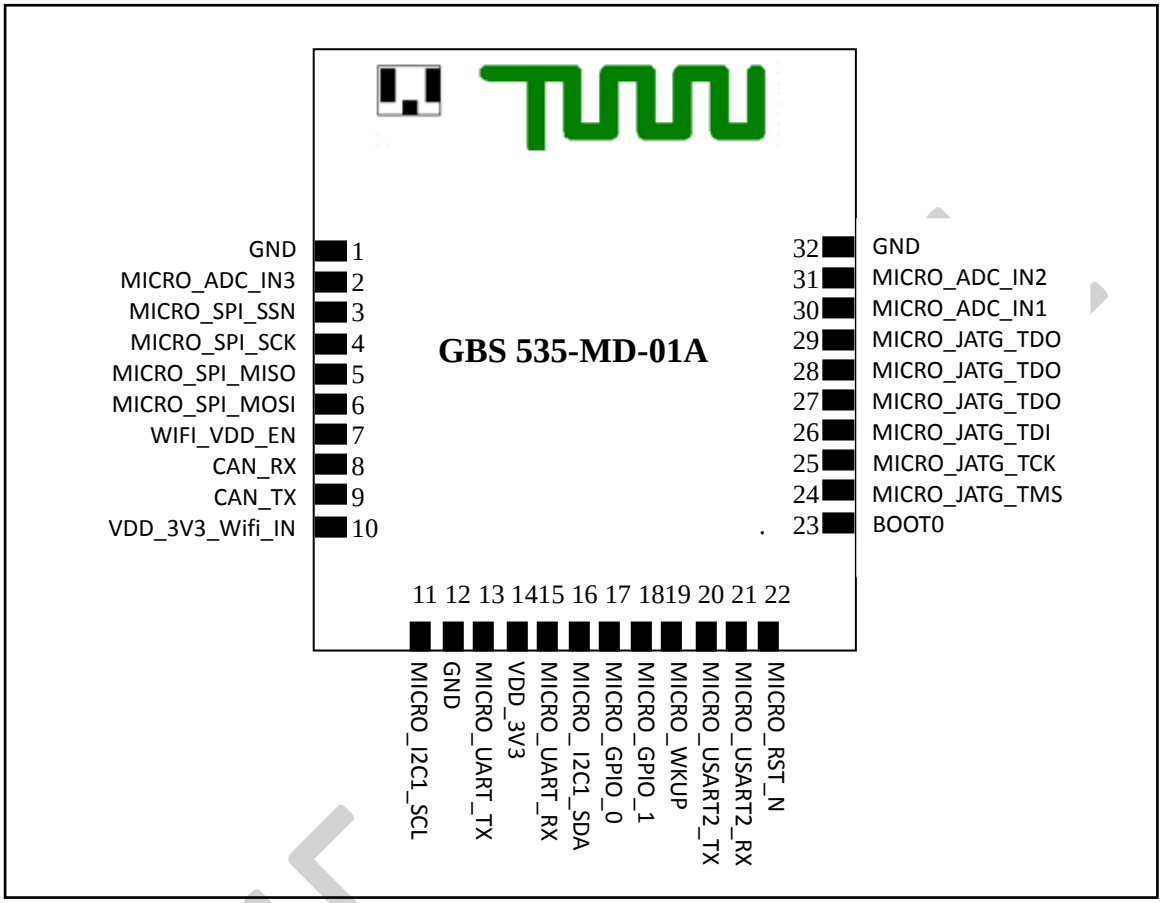

6. Pin Description

The pin description of the GBS 535-MD-01A is listed in the Table 6.1.

Table 6.1 The pin description of the GBS 535-MD-01A

Pin No.	Pin Name	Type	Description	Alternate Function
1	GND	I/O	Ground	
2	MICRO_ADC_IN3	I/O	MCU_ADC_IN_3	EVENTOUT / TIMER/GP IO
3	MICRO_SPI_SSN	I/O	MCU_SPI_SSN	ADC_IN_4/GPIO/ DAC1_OUT / EVENTOUT
4	MICRO_SPI_SCK	I/O	MCU_SPI_SCK	ADC_IN_5 /GPIO/ TIMER/DAC2_OUT / EVENTOUT
5	MICRO_SPI_MISO	I/O	MCU_SPI_MISO	ADC_IN_6 /GPIO/ TIMER/EVENTOUT
6	MICRO_SPI_MOSI	I/O	MCU_SPI_MOSI	ADC_IN_7/GPIO /TIMER/EVENTOUT

10F, No.58, Jhouzih St., Neihu District,
Taipei, 114, Taiwan, R.O.C.
Tel : 886-2-87510688 Fax : 886-2-87525889
http://www.gtcm2m.com

Table 6.1 The pin description of the GBS 535-MD-01A (cont.)

Pin No.	Pin Name	Type	Description	Alternate Function
7	WIFI_VDD_EN	I/O	Enable Wi-Fi VDD	
8	CAN_RX	I/O	MCU_CAN_RX	EVENTOUT/ GPIO
9	CAN_TX	I/O	MCU_CAN_TX	EVENTOUT /GPIO
10	VDD_3V3_Wifi_IN	PI	Wi-Fi power supply	
11	MICRO_ I2C1_SCL	I/O	MCU_I2C1_SCL	EVENTOUT/GPIO
12	GND	I/O	Ground	
13	MICRO_UART_TX	I/O	MCU_UART_TX	EVENTOUT/TIMER/ GPIO
14	VDD_3V3	PI	DC supply for MCU and I/O	
15	MICRO_UART_RX	I/O	MCU_UART_TX	EVENTOUT/ TIMER/ GPIO
16	MICRO_ I2C1_SDA	I/O	MCU_I2C1_SDA	EVENTOUT/GPIO
17	MICRO_GPIO_0	I/O	MCU_GPIO	EVENTOUT/ I2C2_SDA/ ACK for Smart Command SPI/UART mode.
18	MICRO_GPIO_1	I/O	MCU_GPIO	EVENTOUT / I2C2_SCL
19	MICRO_WKUP	I/O	MCU_WKUP	Smart Command 1 : UART 0 : SPI (default)
20	MICRO_USART2_TX	I/O	MCU_USART2_TX	EVENTOUT / GPIO
21	MICRO_USART2_RX	I/O	MCU_USART2_RX	EVENTOUT / GPIO
22	MICRO_RST_N	I/O	MCU_RST_N	
23	BOOT0	O	Normal operation if connected to GND at power up.	
24	MICRO_JATG_TMS	I/O	MCU_JATG_TMS	EVENTOUT / GPIO
25	MICRO_JATG_TCK	I/O	MCU_JATG_TCK	EVENTOUT / GPIO
26	MICRO_JATG_TDI	I/O	MCU_JATG_TDI	EVENTOUT/TIMER/ GPIO
27	MICRO_JATG_TDO	I/O	MCU_JATG_TDO	EVENTOUT / GPIO
28	MICRO_JATG_TRSTN	I/O	MCU_JATG_RSTN	EVENTOUT /GPIO
29	VBAT	PI	Power supply for backup circuitry if VDD isn't present.	
30	MICRO_ADC_IN1	I/O	MCU_ADC_IN_1	EVENTOUT / TIMER/GPIO
31	MICRO_ADC_IN2	I/O	MCU_ADC_IN_2	EVENTOUT / TIMER/GPIO
32	GND	I/O	Ground	

Note 1 : I/O = Input/Output. PI = Power Input.
Note 2 : Refer to the GBS 535 SiP module data sheet for more information about pin definition.
Note 3 : Contact GTC sales for more information about "Alternate Function".

CONFIDENTIAL

10F, No.58, Jhouzih St., Neihu District,
Taipei, 114, Taiwan, R.O.C.
Tel : 886-2-87510688 Fax : 886-2-87525889
http://www.gtcm2m.com

Table 6. 2 Alternate function mapping table

Pin No	Mapping STM32F20x _LQFP176	AF0	AF1	AF2	AF3	AF4	AF5	AF6	AF7	AF8	AF9	AF10	AF12	AF13	AF14	AF15
		SYS	TIM1/2	TIM3/4 /5	TIM8/9 /10/11	2C1/I2C2/ I2C3	SPI1/SPI 2/I2S2	SPI3/ I2S3	UASRT 1/2/3	UART4/5 /USART6	CAN1/CAN 2/TIM12/1 3/14	OTG_FS/ OTG_HS	FSMC/SDI O/OTG_HS	DCMI	ADC DAC	EVENTOUT GPIO
2	PA3		TIM2_ CH4	TIM5_ CH4	TIM9_CH2				USART2_ RX			OTG_HS_ ULPI_D0			ADC123_IN3	EVENTOUT GPIO
3	PA4						SPI1_NSS	SPI3_NSS I2S3_WS	USART2_ CK				OTG_HS_ SOF	DCMI_ HSYNC	ADC12_ IN4 DAC1_OUT	EVENTOUT GPIO
4	PA5		TIM2_CH1 TIM2_ETR		TIM8_ CH1N		SPI1_SCK					OTG_HS_ ULPI_CK			ADC12_ IN5 DAC2_OUT	EVENTOUT GPIO
5	PA6		TIM1_ BKIN	TIM3_CH1	TIM8_ BKIN		SPI1_MISO				TIM13_ CH1			DCMI_ PIXCK	ADC12 _IN6	EVENTOUT GPIO
6	PA7		TIM1_ CH1N	TIM3_CH2	TIM8_ CH1N		SPI1_MOSI				TIM14_ CH1				ADC12_IN7	EVENTOUT GPIO
8	PD0										CAN1_RX		FSMC_D2			EVENTOUT GPIO
9	PD1										CAN1_TX		FSMC_D3			EVENTOUT GPIO
11	PB6			TIM4_CH1		I2C1_SCL			USART1_ TX		CAN2_TX			DCMI_ D5		EVENTOUT GPIO
13	PA9		TIM1_CH2			I2C3_ SMBA			USART1_ TX					DCMI_D0		EVENTOUT GPIO
15	PA10		TIM1_CH3						USART1_ RX			OTG_FS_ID		DCMI_D1		EVENTOUT GPIO
16	PB7			TIM4_ CH2		I2C1_SDA			USART1_ RX				FSMC_NL	DCMI_ VSYNC		EVENTOUT GPIO
17	PF0					I2C2_SDA							FSMC_A0			EVENTOUT GPIO

CONFIDENTIAL

10F, No.58, Jhouzih St., Neihu District,
Taipei, 114, Taiwan, R.O.C.
Tel : 886-2-87510688 Fax : 886-2-87525889
http://www.gtcm2m.com

Table 6. 2 Alternate function mapping table (cont.)

Pin NO	Mapping STM32F20x _LQFP176	AF0	AF1	AF2	AF3	AF4	AF5	AF6	AF7	AF8	AF9	AF10	AF12	AF13	AF14	AF15
		SYS	TIM1/ 2	TIM3/4/ 5	TIM8/9 /10/11	I2C1/ I2C2/ I2C3	SPI1/ SPI2/ I2S2	SPI3/ I2S3	UASRT1/ 2/3	UART4/ 5/USAR T6	CAN1/CA N2/TIM12 /13/14	OTG_FS/ OTG_HS	FSMC/SDI O/OTG_H S	DCMI	ADC/ DAC	EVENTOU T/ GPIO
18	**PF1**					I2C2_ SCL							FSMC_A1			EVENTOU T/GPIO
19	**PA0-WKUP**		TIM2_ CH1 TIM2_ ETR	TIM5_ CH1	TIM8_ ETR				USART2_ CTS	UART4_ TX					ADC123_I N0	EVENTOU T/GPIO
20	**PD5**								USART2_ TX				FSMC_ NWE			EVENTOU T/GPIO
21	**PD6**								USART2_ RX				FSMC_ NWAIT			EVENTOU T/GPIO
24	**PA13**	JTMS-SW DIO														EVENTOU T/GPIO
25	**PA14**	JTCK-SWC LK														EVENTOU T/GPIO
26	**PA15**	JTDI	TIM2_ CH1 TIM2_ ETR				SPI1_ NSS	SPI3_ NSS, I2S3_WS								EVENTOU T/GPIO
27	PB3	JTDO/ TRACESW O	TIM2_ CH2				SPI1_ SCK	SPI3_ SCK , I2S3_ SCK								EVENTOU T/GPIO
28	**PB4**	JTRST		TIM3_ CH1			SPI1_ MISO	SPI3_ MISO								EVENTOU T/GPIO
30	**PA1**		TIM2_ CH2	TIM5_ CH2					USART2_ RTS	UART4_ RX					ADC123_ IN1	EVENTOU T/GPIO
31	**PA2**		TIM2_ CH3	TIM5_ CH3	TIM9_ CH1				USART2_ TX						ADC123_ IN2	EVENTOU T/GPIO

CONFIDENTIAL

10F, No.58, Jhouzih St., Neihu District,
Taipei, 114, Taiwan, R.O.C.
Tel : 886-2-87510688 Fax : 886-2-87525889
http://www.gtcm2m.com

7. Part number, Physical Dimension and the Footprint

Description of the part number of the GBS 535-MD-01A series is listed in the Table 7.1.

Table 7.1 The part number of the GBS 535-MD-01A series

Part Number	Printed antenna	U. FL connector	Pin header
GBS 535-MD-01A	Yes	---	---
GBS 535-MD-01AP	Yes	---	Yes
GBS 535-MD-01B	---	Yes	---
GBS 535-MD-01BP	---	Yes	Yes

The physical dimension of the GBS 535-MD-01A is shown in the Table 7.2. and the footprint is shown in figure 7.1.

Table 7.2 The physical dimension of the GBS 535-MD-01A

Board	Length (mm)	Width (mm)	Height (mm)
GBS 535-MD-01A	28.03mm	20mm	3.5mm

Fig 7.1 Footprint of the GBS 535-MD-01A

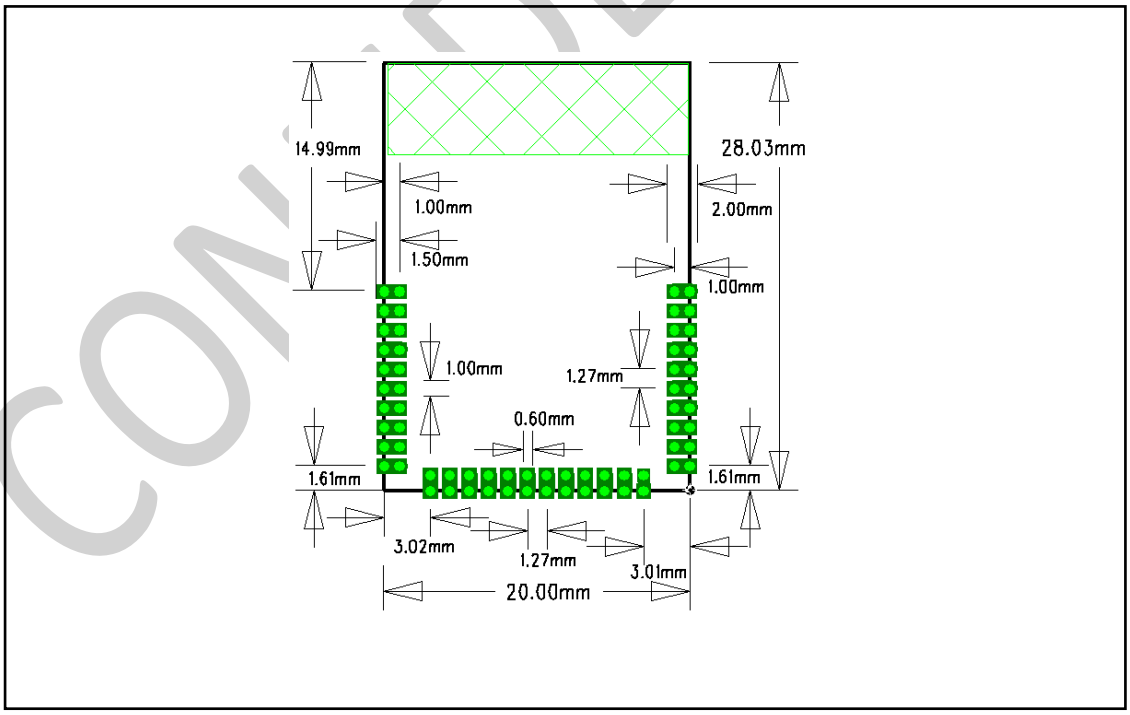

CONFIDENTIAL

10F, No.58, Jhouzih St., Neihu District,
Taipei, 114, Taiwan, R.O.C.
Tel : 886-2-87510688 Fax : 886-2-87525889
http://www.gtcm2m.com

8. Recommended HOST PCB Keep Out Area

It is required to have a keep out area on the customer's HOST PCB underneath of the GBS 535-MD-01A if the printed antenna is used. Metal components, traces, ground fill or the presence of any other components within the keep out area will affect the performance and the radiation pattern of the printed antenna. Ensure that there is no exposed copper in the keep out area on mounting. The recommended HOST PCB keep out area is shown in figure 8.1.

Fig 8.1 The Recommended Keep Out Area of Host PCB

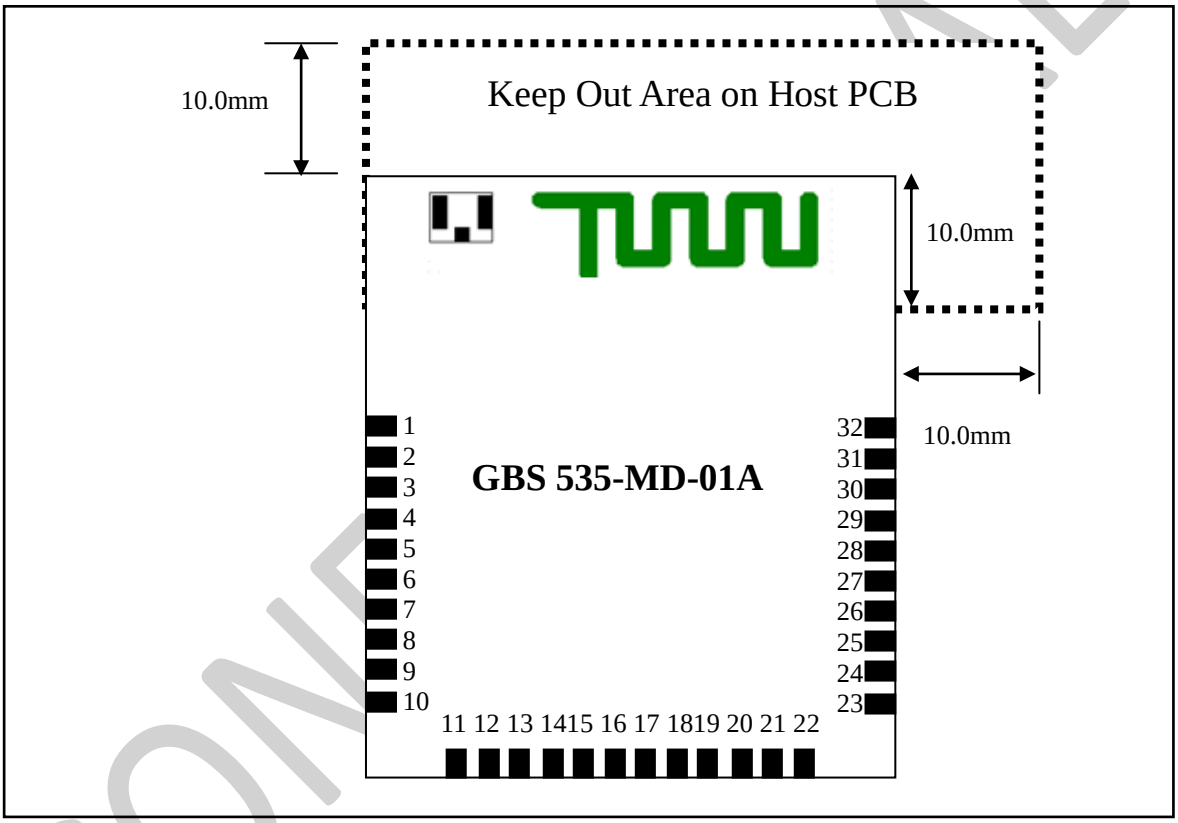

CONFIDENTIAL

10F, No.58, Jhouzih St., Neihu District,
Taipei, 114, Taiwan, R.O.C.
Tel : 886-2-87510688 Fax : 886-2-87525889
http://www.gtcm2m.com

9. External Antenna

The GBS 535-MD-01A/GBS 535-MD-01AP implements the on board printed antenna and the GBS 535-MD-01B/GBS 535-MD-01BP uses the U.FL connector for the external antenna. The co-layout capacitors, C1, C3 as shown in figure 9.1, are designed to satisfy the antenna option. Mount the C1, a 10 PF capacitor if the external antenna is used.

Figure 9.1 Co-layout diagram of C1 and C3

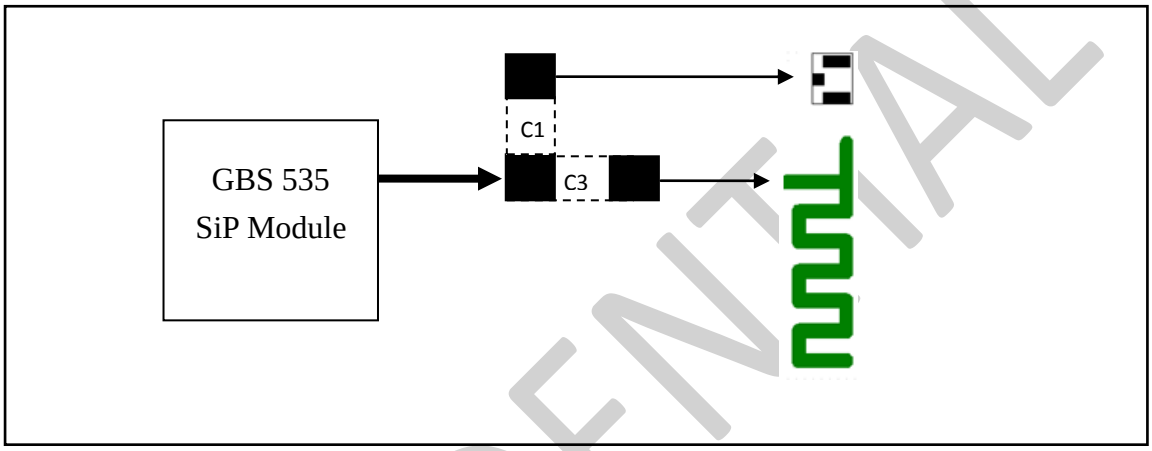

The antenna optional and the corresponding capacitor is listed in Table 9.1.

Table 9.1 Part number of the GBS 535-MD-01A series

Type of Antenna	Type of Antenna	Capacitor
GBS 535-MD-01A GBS 535-MD-01AP	Printed antenna	C3
GBS 535-MD-01B GBS 535-MD-01BP	U. FL. connector	C1, 10PF, 0402 type

CONFIDENTIAL

10F, No.58, Jhouzih St., Neihu District,
Taipei, 114, Taiwan, R.O.C.
Tel : 886-2-87510688 Fax : 886-2-87525889
http://www.gtcm2m.com

The dimension of the U.FL connector is shown in figure 9.3.

Figure 9.3 The dimension of the U.FL connector Unit : mm

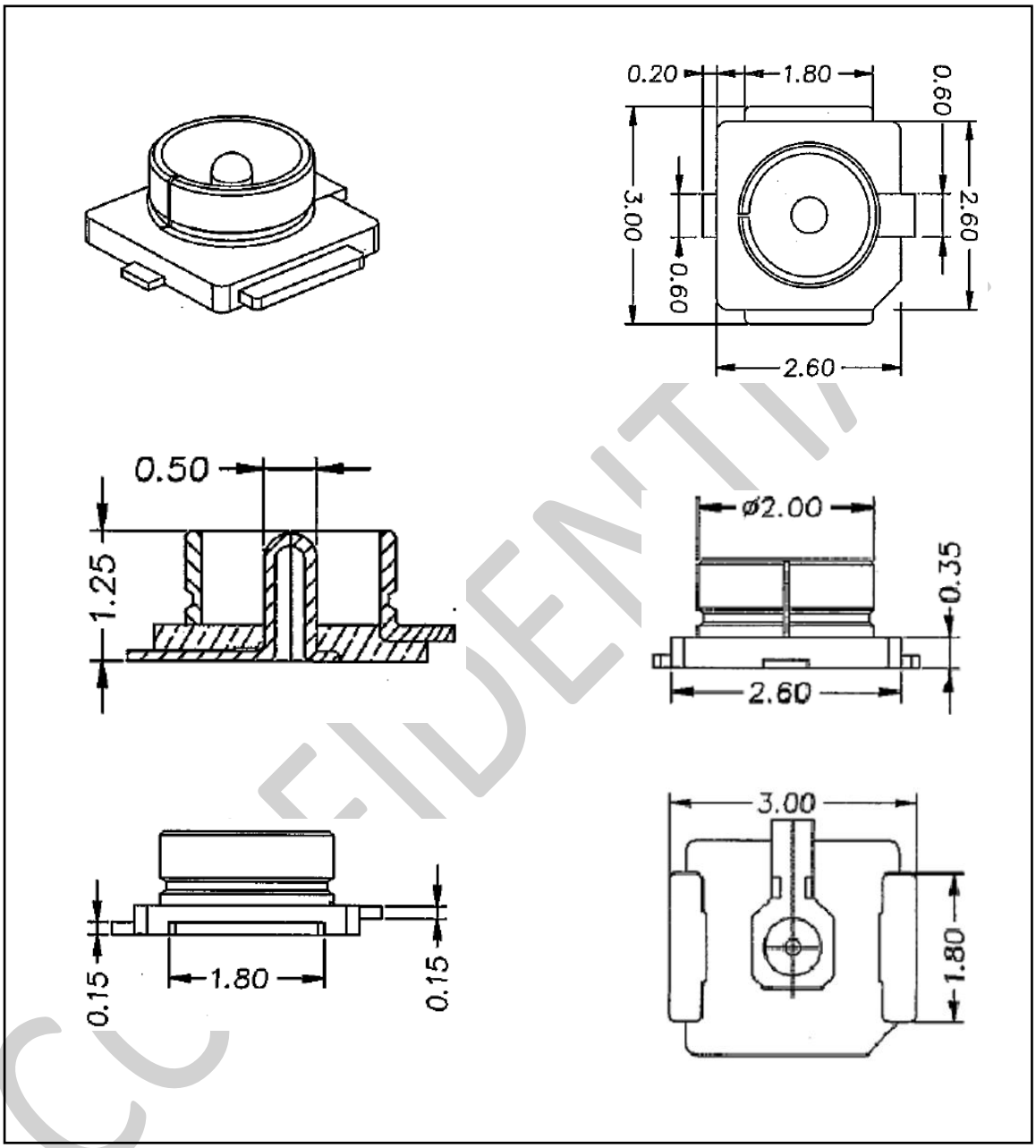

CONFIDENTIAL

10F, No.58, Jhouzih St., Neihu District,
Taipei, 114, Taiwan, R.O.C.
Tel : 886-2-87510688 Fax : 886-2-87525889
http://www.gtcm2m.com

10. Wi-Fi Specification

10. 1 IEEE 802.11 Feature and Standard

The GBS 535-MD-01A complies with the following 802.11 features and standards.

Table 10.1.1 The WLAN feature and standard

Features	Description
WLAN Standards	IEEE 802 Part 11b/g/n (802.11b/g/n single stream)
Antenna Port	Support single antenna for Wi-Fi
Frequency Band	2.400 – 2.4835 GHz

The RF performance is given as follows. The default voltage is 3.3V.

Table 10.1.2 The RF performance of the GBS 535-MD-01A

Features	Description
Frequency Band	2.4000 – 2.4835 GHz (2.4 GHz ISM Band)
Number of selectable Sub channels	11 channels
Modulation	OFDM, DSSS, DBPSK, DQPSK, CCK , 16QAM, 64QAM
Supported Rate	1, 2, 5.5, 11, 6, 9, 12, 24, 36, 48, 54 Mbps & HT20 MCS 0~7
Maximum Receive Input	- 10dBm (with PER < 8%@11 Mbps) - 20dBm (with PER < 10%@54 Mbps) - 20dBm (with PER < 10%@MCS7)
Output Power	17dBm @ 802.11b 13dBm @ 802.11g 11dBm @ 802.11n
Carrier Frequency Accuracy	+/- 20ppm (crystal: 26MHz +/-10ppm in 25^0C)

10F, No.58, Jhouzih St., Neihu District,
Taipei, 114, Taiwan, R.O.C.
Tel : 886-2-87510688 Fax : 886-2-87525889
http://www.gtcm2m.com

10.2 802.11b Specification

Table 10.2.1 The RF Specifications of 802.11b

Features	Description
Frequency Band	2.4000 – 2.4835 GHz (2.4 GHz ISM Band)
Number of Selectable Sub Channel	11 channels
Modulation	OFDM
Data Rate	1, 2, 5.5, 11 Mbps
Carrier Frequency Accuracy	+/- 20ppm (crystal: 26MHz +/-10ppm in 25^0C)

Table 10.2.2 The RF transmitter performance of 802.11b

RF Transmitter, 802.11b	Min.	Typ.	Max.	Unit
Output Power (1, 2, 5.5, 11Mbps)	15.5	17	18.5	dBm
Center frequency tolerance	-20	0	20	ppm
Spectrum Mask				
Fc-22MHz < F < Fc-11MHz & Fc+11MHz < F < Fc+22MHz			-30*	dBr
F< Fc-22MHz & F > Fc+22MHz			-50*	dBr
Power-on (10% ~ 90 %)		0.3	2*	us
Power-down (90% ~ 10 %)		1.5	2*	us
Modulation Accuracy		-17	-10	dB

"*" indicates IEEE802.11 specification.

Table 10.2.3 The RF receiver performance of GBS 535-MD-01A

RF Receiver, 802.11b	Data Rate	Min.	Typ.	Max.	Unit
Minimum Input Sensitivity (PER< 8 %)	1Mbps		-90	-80*	dBm
	2Mbps		-90	-80*	dBm
	5.5Mbps		-90	-76*	dBm
	11Mbps		-87	-76*	dBm
Maximum Input Sensitivity (PER< 8 %)	1/2/5.5/11 Mbps			-10*	dBm

"*" indicates IEEE802.11 specification.

10F, No.58, Jhouzih St., Neihu District,
Taipei, 114, Taiwan, R.O.C.
Tel : 886-2-87510688 Fax : 886-2-87525889
http://www.gtcm2m.com

10.3 802.11g Specification

Table 10.3.1 The RF transmitter specification, 802.11g

802.11g Transmit	Condition	Min.	Typ.	Max.	Unit
Output Power	6M/9M/12M/18M/24M/36M/48M/54M	11.5	13	14.5	dBm
					dBm
					dBm
Center Frequency Tolerance		-20	0	20	ppm
Modulation Accuracy	6Mbps		-30	-5*	dB
	9Mbps		-30	-8*	dB
	12Mbps		-30	-10*	dB
	18Mbps		-30	-13*	dB
	24Mbps		-30	-16*	dB
	36Mbps		-30	-19*	dB
	48Mbps		-30	-22*	dB
	54Mbps		-30	-25*	dB
Spectrum Mask	@ 11MHz			-20*	dBr
	@ 20MHz			-28*	dBr
	@ 30MHz			-40*	dBr

"*" indicates IEEE802.11 specification.

Table 10.3.2 The RF receiver specification, 802.11g

802.11g Transmit	Condition	Min.	Typ.	Max.	Unit
Minimum Input Sensitivity (PER<10 %)	6Mbps		-85	-82*	dBm
	9Mbps		-85	-81*	dBm
	12Mbps		-85	-79*	dBm
	18Mbps		-84.5	-77*	dBm
	24Mbps		-82	-74*	dBm
	36Mbps		-78.5	-70*	dBm
	48Mbps		-74	-66*	dBm
	54Mbps		-70	-65*	dBm
Maximum Input Sensitivity (PER<10%)	6/9/12/18/24/36/48/54Mbps			-20*	dBm

"*" indicates IEEE802.11 specification.

10F, No.58, Jhouzih St., Neihu District,
Taipei, 114, Taiwan, R.O.C.
Tel : 886-2-87510688 Fax : 886-2-87525889
http://www.gtcm2m.com

10.4 802.11n Specification

Table 10.4.1 The RF transmitter specification, 802.11n

802.11n Transmit		Min.	Typ.	Max.	Unit
Output Power (HT20 MCS 0~7)		9.5	11	12.5	dBm
Center Frequency Tolerance		-20	0	20	ppm
Modulation Accuracy (HT20, MCS0~7)			-30	-28*	dB
Spectrum Mask	@ 11MHz			-20*	dBr
	@ 20MHz			-28*	dBr
	@ 30MHz			-40*	dBr

"*" indicates IEEE802.11 specification.

Table 10.4.2 The RF receiver specification, 802.11n

802.11n Receiver	Condition	Min.	Typ.	Max.	Unit
Minimum Input Sensitivity (PER<10 %)	HT20, MCS0		-84	-82*	dBm
	HT20, MCS1		-84	-79*	dBm
	HT20, MCS2		-82.5	-77*	dBm
	HT20, MCS3		-80.5	-74*	dBm
	HT20, MCS4		-77	-70*	dBm
	HT20, MCS5		-73	-66*	dBm
	HT20, MCS6		-71	-65*	dBm
	HT20, MCS7		-70	-64*	dBm
Maximum Input Sensitivity (PER<10%)	MSC0~MSC7			-20*	dBm

"*" indicates IEEE802.11 specification.

10F, No.58, Jhouzih St., Neihu District,
Taipei, 114, Taiwan, R.O.C.
Tel : 886-2-87510688 Fax : 886-2-87525889
http://www.gtcm2m.com

11. Communications Interface

11.1 I2C Interface Characteristics

Table 11.1.1 I2C interface Characteristics

Symbol	Parameter	Standard mode I^2C(1)		Fast mode I^2C(1)(2)		Unit
		Min	Max	Min	Max	
$t_{w(SCLL)}$	SCL clock low time	4.7	-	1.3	-	µs
$t_{w(SCLH)}$	SCL clock high time	4.0	-	0.6	-	
$t_{su(SDA)}$	SDA setup time	250	-	100	-	ns
$t_{h(SDA)}$	SDA data hold time	0(3)	-	0(4)	900(3)	
$t_{r(SDA)}$ $t_{r(SCL)}$	SDA and SCL rise time	-	1000	$20 + 0.1C_b$	300	
$t_{f(SDA)}$ $t_{f(SCL)}$	SDA and SCL fall time	-	300	-	300	
$t_{h(STA)}$	Start condition hold time	4.0	-	0.6	-	µs
$t_{su(STA)}$	Repeated Start condition setup time	4.7	-	0.6	-	
$t_{su(STO)}$	Stop condition setup time	4.0	-	0.6	-	µs
$t_{w(STO:STA)}$	Stop to Start condition time (bus free)	4.7	-	1.3	-	µs
C_b	Capacitive load for each bus line	-	400	-	400	pF

1. Guaranteed by design, not tested in production.
2. f_{PCLK1} must be at least 2 MHz to achieve standard mode I2C frequencies. It must be at least 4MHz to achieve fast mode I2C frequencies, and a multiple of 10 MHz to reach the 400 kHz maximum I2C fast mode clock.
3. The maximum hold time of the Start condition has only to be met if the interface does not stretch the low period of SCL signal.
4. The device must internally provide a hold time of at least 300ns for the SDA signal in order to bridge the undefined region of the falling edge of SCL.

10F, No.58, Jhouzih St., Neihu District,
Taipei, 114, Taiwan, R.O.C.
Tel : 886-2-87510688 Fax : 886-2-87525889
http://www.gtcm2m.com

Figure 11.1 I2C timing diagram

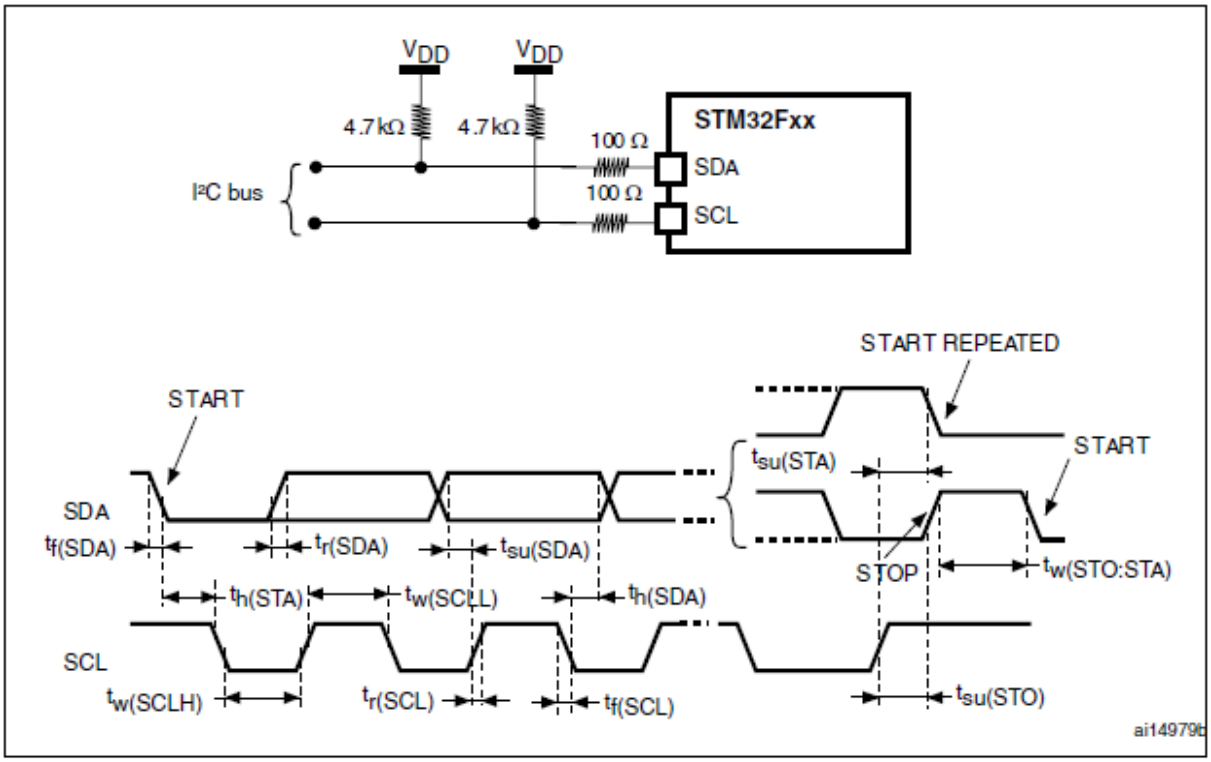

1. Measurement points are done at CMOS levels: $0.3V_{DD}$ and $0.7V_{DD}$.

CONFIDE

10F, No.58, Jhouzih St., Neihu District,
Taipei, 114, Taiwan, R.O.C.
Tel : 886-2-87510688 Fax : 886-2-87525889
http://www.gtcm2m.com

11.2 SPI Interface Characteristics

Table 11.2.1 SPI interface Characteristics

Symbol	Parameter	Conditions	Min	Max	Unit
f_{SCK} $1/t_{c(SCK)}$	SPI clock frequency	Master mode	-	30	MHz
		Slave mode	-	30	
$t_{r(SCL)}$ $t_{f(SCL)}$	SPI clock rise and fall time	Capacitive load: C = 30 pF	-	8	ns
DuCy(SCK)	SPI slave input clock duty cycle	Slave mode	30	70	%
$t_{su(NSS)}$ (2)	NSS setup time	Slave mode	$4t_{PCLK}$	-	ns
$t_{h(NSS)}$ (2)	NSS hold time	Slave mode	$2t_{PCLK}$	-	
$t_{w(SCLH)}$ (2) $t_{w(SCLL)}$ (2)	SCK high and low time	Master mode, f_{PCLK} = 30 MHz, presc = 2	t_{PCLK}-3	t_{PCLK}+3	
$t_{su(MI)}$ (2) $t_{su(SI)}$ (2)	Data input setup time	Master mode	5	-	
		Slave mode	5	-	
$t_{h(MI)}$ (2) $t_{h(SI)}$ (2)	Data input hold time	Master mode	5	-	
		Slave mode	4	-	
$t_{a(SO)}$ (2)(3)	Data output access time	Slave mode, f_{PCLK} = 20 MHz	0	$3t_{PCLK}$	
$t_{dis(SO)}$ (2)(4)	Data output disable time	Slave mode	2	10	
$t_{v(SO)}$ (2)(1)	Data output valid time	Slave mode (after enable edge)	-	25	
$t_{v(MO)}$ (2)(1)	Data output valid time	Master mode (after enable edge)	-	5	
$t_{h(SO)}$ (2)	Data output hold time	Slave mode (after enable edge)	15	-	
$t_{h(MO)}$ (2)		Master mode (after enable edge)	2	-	

1. Remapped SPI1 characteristics to be determined.
2. Based on characterization, not tested in production.
3. Min time is for the minimum time to drive the output and the max time is for the maximum time to validate the data.
4. Min time is for the minimum time to invalidate the output and the max time is for the maximum time to put the data in Hi-Z

10F, No.58, Jhouzih St., Neihu District,
Taipei, 114, Taiwan, R.O.C.
Tel : 886-2-87510688 Fax : 886-2-87525889
http://www.gtcm2m.com

12. Power Consumption

12.1 WLAN Sub-System

Voltage reference : VBAT @ 3.6V, 20°C, VDDIO = 1.8V, CBUCK out = 1.5V

Table 12.1.1 WLAN sub-system power consumption

Operational Modes	Condition	Typical	Unit
OFF	1	11	uA
OFF	2	40	uA
IDLE		185	uA
SLEEP	5	200	uA
Rx (Listen)	3	52	mA
Rx (Active)	4	59	mA
Power Save	6, 9	1.9	mA
Tx CCK (11 Mbps at 18.5 dBm)	7, 11	320	mA
Tx OFDM (54 Mbps at 15.5 dBm)	8,11	270	mA
Tx OFDM (65 Mbps at 14.5 dBm)	10, 11	260	mA

Note 1: WL_RST_N = Low, VDDIO is not present

Note 2: WL_RST_N = Low, VDDIO is present

Note 3: Carrier Sense (CCA) when no carrier present

Note 4: Carrier Sense (CS) detect/Packet Rx

Note 5: Intra-beacon Sleep

Note 6: Beacon Interval = 102.4 ms, DTIM = 1, Beacon duration = 1 ms @1 Mbps Integrated Sleep + wakeup + Beacon Rx current over 1 DTIM interval

Note 7: CCK power at chip port. Duty cycle is 100%. Includes PA contribution at 3.6V

Note 8: OFDM power at chip port. Duty cycle is 100%. Includes PA contribution at 3.6V

Note 9: In WLAN power-saving mode, the following blocks are powered down: Crystal oscillator, Baseband PLL, AFE, RF PLL, Radio

Note 10: OFDM power at chip port is 16 dBm, duty cycle is 100%, includes PA contribution at 3.6V

The above blocks are turned ON in the required order with sufficient time for them to settle.

This sequencing is done by the PMU controller that controls the settling

CONFIDENTIAL

10F, No.58, Jhouzih St., Neihu District,
Taipei, 114, Taiwan, R.O.C.
Tel : 886-2-87510688 Fax : 886-2-87525889
http://www.gtcm2m.com

12.2 MCU Sub-System

Typical and maximum current consumption in Run mode, code with data processing running from Flash memory (ART accelerator disabled) is listed in the Table 12.2.1.

Table 12.2.1 Typical and maximum current consumption in Run mode code with data processing running from Flash memory (ART accelerator disabled)

Operational Mode	Conditions	f_{HCLK}	Typical	Maximum(1)		Unit
			T_A = 25 °C	T_A = 85 °C	T_A = 105 °C	
Supply Current in Run mode	External clock(2), all peripherals enabled(3)	120 MHz	61	81	93	mA
		90 MHz	48	68	80	
		60 MHz	33	53	65	
		30 MHz	18	38	50	
		25 MHz	14	34	46	
		16 MHz(4)	10	30	42	
		8 MHz	6	26	38	
		4 MHz	4	24	36	
		2 MHz	3	23	35	
	External clock(3), all peripherals disabled	120 MHz	33	54	66	
		90 MHz	27	47	59	
		60 MHz	19	39	51	
		30 MHz	11	31	43	
		25 MHz	8	28	41	
		16 MHz(4)	6	26	38	
		8 MHz	4	24	36	
		4 MHz	3	23	35	
		2 MHz	2	23	34	

1. Based on characterization, tested in production at VDD max and f_{HCLK} max with peripherals enabled.
2. External clock is 4 MHz and PLL is on when f_{HCLK} > 25 MHz.
3. When the ADC is on (ADON bit set in the ADC_CR2 register), add an additional power consumption of 1.6 mA per ADC for the analog part.
4. In this case HCLK = system clock/2.
5. The ART Accelerator™ is a memory accelerator which is optimized for STM32 industry standard ARM® Cortex™-M3 processors.

CONFI

10F, No.58, Jhouzih St., Neihu District,
Taipei, 114, Taiwan, R.O.C.
Tel : 886-2-87510688 Fax : 886-2-87525889
http://www.gtcm2m.com

Typical and maximum current consumption in Run mode, code with data processing running from Flash memory (ART accelerator enabled) or RAM [1] is listed in the Table 12.2.2.

Table 12.2.2 Typical and maximum current consumption (ART accelerator enabled)

Operational Mode	Conditions	f_{HCLK}	Typ	Max[2]		Unit
		f_{HCLK}	T_A =25 °C	T_A =85°C	T_A =105 °C	
Supply Current in Run mode	External clock[3], all peripherals enabled[4]	120 MHz	49	63	72	mA
		90 MHz	38	51	61	
		60 MHz	26	39	49	
		30 MHz	14	27	37	
		25 MHz	11	24	34	
		16 MHz[5]	8	21	30	
		8 MHz	5	17	27	
		4 MHz	3	16	26	
		2 MHz	2	15	25	
	External clock[3], all peripherals disabled	120 MHz	21	34	44	
		90 MHz	17	30	40	
		60 MHz	12	25	35	
		30 MHz	7	20	30	
		25 MHz	5	18	28	
		16 MHz[5]	4.0	17.0	27.0	
		8 MHz	2.5	15.5	25.5	
		4 MHz	2.0	14.7	24.8	
		2 MHz	1.6	14.5	24.6	

1. Code and data processing running from SRAM1 using boot pins.
2. Based on characterization, tested in production at VDD max and f_{HCLK} max with peripherals enabled.
3. External clock is 4 MHz and PLL is on when f_{HCLK} > 25 MHz.
4. When the ADC is on (ADON bit set in the ADC_CR2 register), add an additional power consumption of 1.6 mA per ADC for the analog part
5. In this case HCLK = system clock/2.

CONFI

10F, No.58, Jhouzih St., Neihu District,
Taipei, 114, Taiwan, R.O.C.
Tel : 886-2-87510688 Fax : 886-2-87525889
http://www.gtcm2m.com

13. Electrical Specification

13.1 Absolute Maximum Rating

Table 13.1.1 Absolute maximum rating

Supply Power	Maximum +4 Volt		
Voltage ripple	+/- 2%	Maximum values not exceeding operating voltage.	
	Power	Minimum	Maximum
Power Supply Absolute Maximum Ratings	VBAT	0	4
	VDD_3V3	0	4
	VDD_3V3_WIFI	0	6

13.2 Power Supply

Power supply of the GBS 535-MD-01A is provided by the host system via the power pins of the GBS 535-MD-01A.

Table 13.2.1 Power supply

Symbol	Parameter	Min	Typ	Max	Unit
VBAT	MCU VBAT Voltage	2.0	3.3	3.6	V
VDD_3V3	GPIO I/O Supply	2.4	3.3	3.6	V
VDD_3V3_WIFI	Wi-Fi Voltage/ Wi-Fi PA Voltage	3.0	3.3	3.6	V

14. Recommended Reflow Profile

The recommended solder reflow temperature profile is shown in figure 15.1.

Figure 14.1 Solder reflow temperature profile

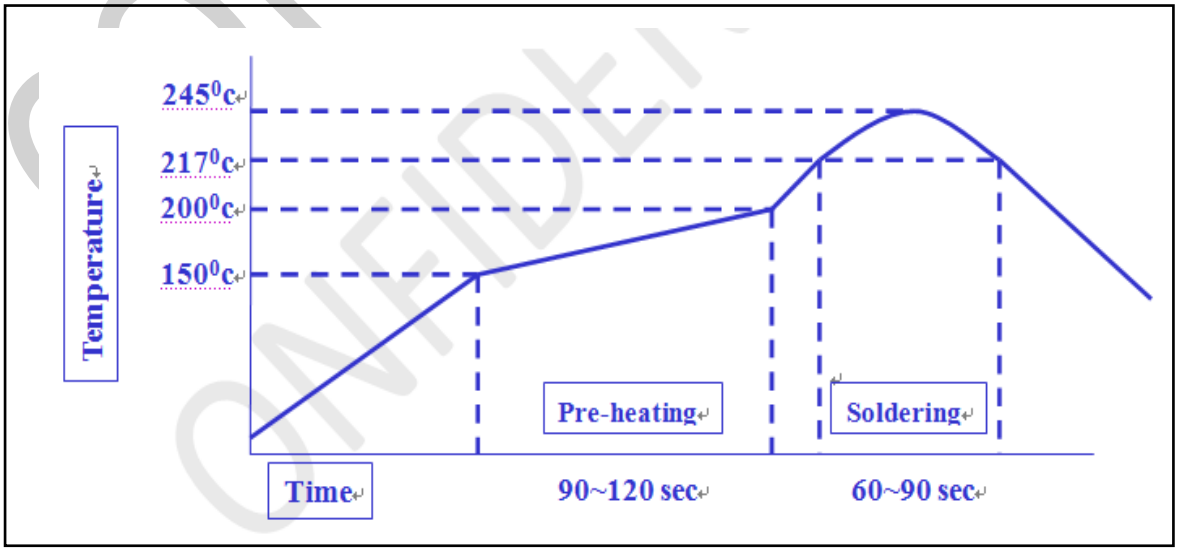

10F, No.58, Jhouzih St., Neihu District,
Taipei, 114, Taiwan, R.O.C.
Tel : 886-2-87510688 Fax : 886-2-87525889
http://www.gtcm2m.com

15. Storage Condition

The recommended storage temperature and humidity condition of the GBS 535-MD-01A is listed in the Table 14.1.

Table 15.1 Storage condition

Item	Condition	Remark
Operating Temperature	-40° to 85° Celsius	
Humidity range	Maximum 95%	Non condensing, relative humidity.

CONFIDENTIAL

10F, No.58, Jhouzih St., Neihu District,
Taipei, 114, Taiwan, R.O.C.
Tel : 886-2-87510688 Fax : 886-2-87525889
http://www.gtcm2m.com

16. Federal Communication Commission Interference Statement

This equipment has been tested and found to comply with the limits for a Class B digital device, pursuant to Part 15 of the FCC Rules. These limits are designed to provide reasonable protection against harmful interference in a residential installation.

This equipment generates, uses and can radiate radio frequency energy and, if not installed and used in accordance with the instructions, may cause harmful interference to radio communications. However, there is no guarantee that interference will not occur in a particular installation. If this equipment does cause harmful interference to radio or television reception, which can be determined by turning the equipment off and on, the user is encouraged to try to correct the interference by one of the following measures:

. Reorient or relocate the receiving antenna.
. Increase the separation between the equipment and receiver.
. Connect the equipment into an outlet on a circuit different from that to which the receiver is connected.
. Consult the dealer or an experienced radio/TV technician for help.

FCC Caution: To assure continued compliance, any changes or modifications not expressly approved by the party responsible for compliance could void the user's authority to operate this equipment. (Example - use only shielded interface cables when connecting to computer or peripheral devices).

End Product Labeling

This transmitter module is authorized only for use in devices where the antenna may be installed such that 20 cm may be maintained between the antenna and users. The final end product must be labeled in visible area with the following: "Contains FCC ID: 2ABVG-001"

"

End Product Manual Information

The user manual for end users must include the following information in a prominent location "IMPORTANT NOTE: To comply with FCC RF exposure compliance requirements, the antenna used for this transmitter must be installed to provide a separation distance of at least 20cm from all persons and must not be colocated or operating in conjunction with any other antenna or transmitter." This device complies with part 15 of the FCC rules. Operation is subject to the following two conditions (1) This device may not cause harmful interference and (2) This device must accept any interference received, including interference that may cause undesired operation.

CONFIDENTIAL

10F, No.58, Jhouzih St., Neihu District,
Taipei, 114, Taiwan, R.O.C.
Tel : 886-2-87510688 Fax : 886-2-87525889
http://www.gtcm2m.com

IMPORTANT NOTE: In the event that these conditions can not be met (for example certain laptop configurations or colocation with another transmitter), then the FCC authorization is no longer considered valid and the FCC ID can not be used on the final product. In these circumstances, the OEM integrator will be responsible for reevaluating the end product (including the transmitter) and obtaining a separate FCC authorization. This device is intended only for OEM integrators under the following conditions: The antenna must be installed such that 20 cm is maintained between the antenna and users. As long as a condition above is met, further transmitter test will not be required. However, the OEM integrator is still responsible for testing their end product for any additional compliance requirements required with this module installed (for example, digital device emissions, PC peripheral requirements, etc.).

CONFIDENTIAL

10F, No.58, Jhouzih St., Neihu District,
Taipei, 114, Taiwan, R.O.C.
Tel : 886-2-87510688 Fax : 886-2-87525889
http://www.gtcm2m.com

17. Sales and Service

Golden Technology Corporation

Corporate office

10F., No.58, Jhouzih St., Neihu District, Taipei City 114, Taiwan.

Distributor

ASEC International Corporation

Address： 7F., No.58, Jhouzih St., Neihu District, Taipei City 114, Taiwan.

Postal Code： 114

Tel： 886-2-8752- 5858

Fax： 886-2-8752-5868

E-mail： ASEC@asec.com.tw

ASEC International Corporation (Taichung)

Address： Rm. 303, 2F.-1, No.562-1, Sec. 2, Wenxin Rd., Xitun Dist., Taichung City 407, Taiwan.

Postal Code： 407

Tel： 886-4-2310-9918

Fax： 886-4-2310-9828

E-mail： ASEC@asec.com.tw

ASEC International Corporation (Shanghai)

Address： Room 1105, Block C, 70 Caobao Road, Xuhui District, Shanghai ,China

Postal Code： 200235

Tel： 86-21-60899566

Fax： 86-21-64329280

E-mail： ASEC@asec.com.tw

ASEC International Corporation (Shenzhen)

Address： Room 0703, 7/F, Desay Technology Building, Keji South Road 10th,South of Technology Section, Nanshan District, Shenzhen,Guangdong, China
Subway Luobao Line (D Exit, Hi-Tech Park station)

Postal Code： 518057

CONFIDENTIAL

Tel： 86-775-25195 030 / 852-9712 0349
Fax： 86-755-25195 031
E-mail： ASEC@asec.com.tw

CONFIDENTIAL

10F, No.58, Jhouzih St., Neihu District,
Taipei, 114, Taiwan, R.O.C.
Tel : 886-2-87510688 Fax : 886-2-87525889
http://www.gtcm2m.com